62957400 J

CONTROL DATA CORPORATION

CDC® 752

KEYBOARD DISPLAY TERMINAL

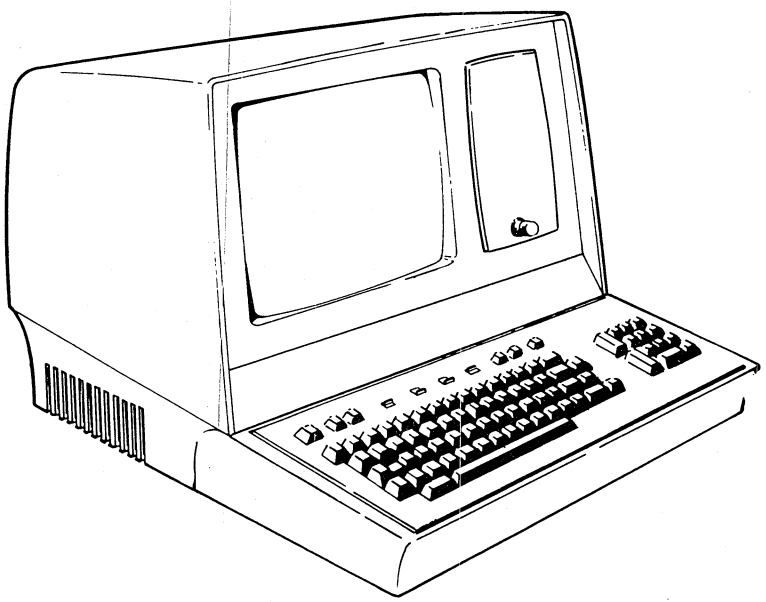

HARDWARE MAINTENANCE MANUAL

62957400

CONTROL DATA CORPORATION

CDC® 752

KEYBOARD DISPLAY TERMINAL

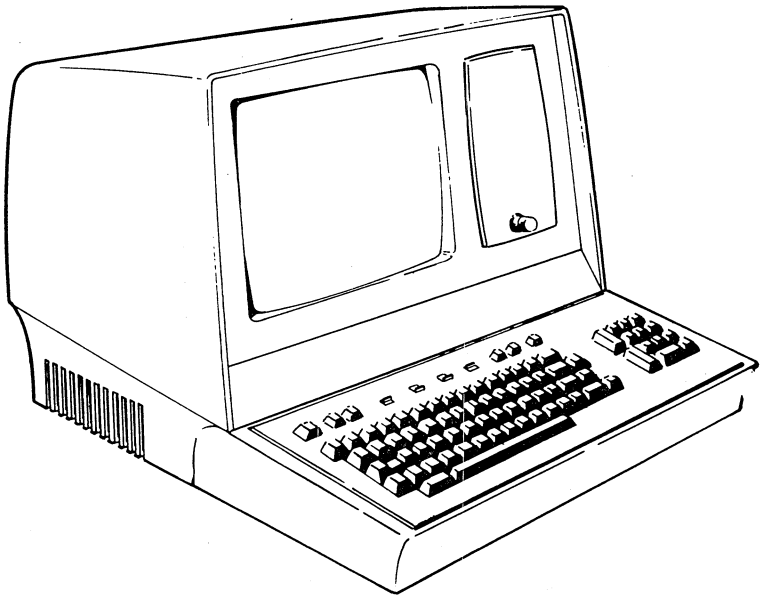

HARDWARE MAINTENANCE MANUAL

REVISION RECORD

REVISION	DESCRIPTION
01	Draft copy.
(02-18-77)	
02	Revised draft copy.
(03-22-77)	
03	Revised draft copy. Corrections made to section 6 material.
(04-25-77)	
A	Manual released. This printing obsoletes all previous editions. Text
(09-30-77)	incorporates ECOs 10908, 10935, 10952, 10996, 11000, 11189, 11226,
	11394, 11413, 11438, 11442, 11547, 11616, 11709, 11747, 11761,
	11821, 11953, 12096, 12107, 12153, and 12170.
B	Manual revised. Interim released (draft copy) as B revision. Two
(04-25-78)	appendixes added: C, which contains information on the 82-Key
	Typewriter Keyboard; D, which contains DDLT's and Procedures for the
	70-LPM Impact Printer.
C	Interim change to incorporate ECOs 12352, 12492, 12626, 12702, 12756,
(10-27-78)	12827, 12854, 12870, 12988, 13059, and 13089.
D	Manual revised to include Series/1-compatible terminals per ECO 13141.
(02-22-79)	Also changed Equipment Sheet and Diagrams section per ECO 12605.
E	Incorporates ECOs 12225, 12629, 12615, 12701, 12715, 13101, 13037,
(06-01-79)	13218, 13164, 13287, and enters appendix C per ECO 13141 into manual
	text. This printing obsoletes all previous editions.
F	Interim change to incorporate ECO's 12645, 12855, 13322, 13344, 13404,
(08-14-79)	13419, 13472, 13505, 13515, and 13581 .
G	Interim change to incorporate ECO 13647 and to add keyboard and power

01989-1

Publication No.
62957400

REVISION LETTERS I, O, Q AND X ARE NOT USED

© 1977, 1978, 1979, 1980, 1981
by Control Data Corporation
Printed in the United States of America

Address comments concerning this manual to:

Control Data Corporation
Technical Publications Department
2401 North Fairview Avenue
St. Paul, Minnesota 55113

or use Comment Sheet in the back of this manual.

REVISION RECORD (CONTD)

New features, as well as changes, deletions, and additions to information in this manual are indicated by bars in the margins or by a dot near the page number if the entire page is affected. A bar by the page number indicates pagination rather than content has changed.

REVISION	DESCRIPTION
(09-27-79)	supply schematic diagrams to section 5 of manual.
H	Manual revised to incorporate ECOs 13823, 13943, 14001, 14024, and 14119;
(07-15-80)	Service Bulletins 3664, 3675, and 4118; and technical changes; deletes
	duplicate parts data.
J	Manual revised to incorporate ECOs 14110, 14154, 14429, 14566, 14635,
(07-02-81)	and 14708.

01990

Publication No.
62957400

MANUAL TO EQUIPMENT LEVEL CORRELATION

This manual reflects the equipment configurations listed below.

EXPLANATION: Locate the equipment type and series number, as shown on the equipment FCO log, in the list below. Immediately to the right of the series number is an FCO number. If that number and all of the numbers underneath it match all of the numbers on the equipment FCO log, then this manual accurately reflects the equipment.

EQUIPMENT TYPE	SERIES	WITH FCO'S	COMMENTS
CC555-A	01	–	ECO 12626
	02	–	ECO 12702
	03		
CC555-B	01	–	ECO 12626
	02	–	ECO 12702
	03	–	ECO 13419
	04		
CC555-C	01	–	ECO 12626
	02	–	ECO 12702
	03		

01987-2

MANUAL TO EQUIPMENT LEVEL CORRELATION (CONTD)

EQUIPMENT TYPE	SERIES	WITH FCO'S	COMMENTS
CC555-D	01	–	ECO 12626
	02	–	ECO 12702
	03	–	ECO 13419
	04		
CC555-E	01		
CC555-F	01		
CC555-G	01		
CC555-H	01	–	ECO 12963
	02	–	ECO 13419
	03		
CC555-J	01		
CC555-K	01		
CC555-L	01		
CC555-M	01		
CA150-A	01		
CA150-B	01		
CA150-C	01		
CA150-D	01		
CA150-E	01		

01987-3

LIST OF EFFECTIVE PAGES

New features, as well as changes, deletions, and additions to information in this manual are indicated by bars in the margins or by a dot near the page number if the entire page is affected. A bar by the page number indicates pagination rather than content has changed.

PAGE	REV
Front Cover	-
Title Sheet	-
iii, iv	J
v thru viii	F
ix, x	J
xi thru xiv	E
xv	H
xvi thru xviii	E
xix and xx	J
xxi thru xxv	H
1-1, 1-2	E
1-3	A
1-4 thru 1-23	E
2-1	A
3-1	A
4-1 thru 4-20	A
4-21 thru 4-23	H
5-1	F
5-2	A
5-3 thru 5-5	E
5-6	A
5-7	E
5-8	A
5-9	E
5-10 thru 5-12	A
5-13	E

PAGE	REV
5-14	A
5-15	E
5-16	A
5-17	E
5-18 thru 5-20	A
5-21	E
5-22	A
5-23 thru 5-25	E
5-26 thru 5-28	A
5-29	E
5-30	A
5-31	E
5-32	A
5-33 thru 5-35	E
5-36	A
5-37	E
5-38	A
5-39	E
5-40 thru 5-42	A
5-43	E
5-44	A
5-45 thru 5-49	E
5-50	J
5-50.1 and 5-50.2	F
5-50.3 and 5-50.4	J
5-51	F

PAGE	REV
5-52 thru 5-54	J
5-55	E
5-56 thru 5-63	J
5-64 thru 5-67	E
5-68 thru 5-70	G
6-1 thru 6-7	A
6-8 thru 6-26	E
6A-1	E
6A-2 thru 6A-19	A
6B-1 thru 6B-4	A
6B-5 thru 6B-13	E
6B-14	H
6B-14.1/6B-14.2	H
6B-15/6B-16	H
6B-17 thru 6B-50	A
6B-51/6B-52	A
6B-53 thru 6B-56	A
6B-57	H
6B-58 thru 6B-61	A
6C-1 thru 6C-13	A
6C-14	F
6C-15 thru 6C-22	A
6D-1 thru 6D-8	E
6D-9	A
6D-10 thru 6D-21	E
6D-22	A

02092-1A

LIST OF EFFECTIVE PAGES (CONTD)

PAGE	REV
6D-23 thru 6D-36	E
6E-1 thru 6E-34	E
6-27 thru 6-32	E
7-1	A
7-2	E
7-3 thru 7-6	F
7-7 thru 7-11	E
7-12/7-13	H
7-14/7-15	F
7-16 thru 7-19	E
7-20	H
7-21 thru 7-22	E
7-23/7-24	H
7-25 thru 7-35	F
7-36	E
7-37 thru 7-44	F
7-45 thru 7-47	E
7-48 thru 7-49	F
7-50, 7-51	G
7-52, 7-53	F
7-54 thru 7-65	E
7-66 thru 7-67	F
7-68 thru 7-71	E
7-72 thru 7-76	F
7-76.1 thru 7-76.4	F
7-77 thru 7-82	F
7-82.1 thru 7-82.4	F
7-83	F
7-84 thru 7-91	E

PAGE	REV
7-92 thru 7-96	F
7-96.1 thru 7-96.4	F
7-97 thru 7-102	F
7-102.1 thru 7-102.4	F
7-103 thru 7-116	E
7-117 thru 7-126	J
7-127 thru 7-157	E
7-158 thru 7-161	J
7-162 thru 7-197	E
7-198	H
7-199/7-200	E
7-201 thru 7-223	H
8-1	A
A-1 thru A-10	A
B-1	A
B-2	H
C-1, C-2	E
C-3/C-4	J
C-5 thru C-8	E
C-9	F
C-10	E
C-11	F
C-12, C-13	E
C-14	F
C-15 thru C-16	E
C-17 thru C-19	F
C-20	E
C-21, C-22	F
C-23 thru C-37	E

PAGE	REV
Comment Sheet	J
Mailer	-
Back Cover	-

02092-2A

PREFACE

This manual contains maintenance information for the CDC® 752 Keyboard Display Terminal. This terminal is a remote communication device that operates in a conversational mode with a central processor at speeds of 110 to 9600 baud. The terminal is available in different configurations to meet both national and international standards, and to provide compatibility with different types of communication facilities. Appendix C provides information on two configurations that are compatible with IBM* Series/1 systems. The genealogy charts in the Parts Data section of this manual and in appendix C provide the equipment configuration for each type of terminal. Additionally, three different types of character printers and two keyboards are available for use as peripheral devices on the terminal. These are described in the main body of the manual.

Maintenance information found in this manual is intended for field service personnel and for repair center or technical support personnel. Field service maintenance information is found principally in sections 1, 4, 6, and 8 of this manual. Repair center maintenance information is contained in sections 5 and 7. Appendix C contains field service and repair center maintenance for the Series/1 compatible terminals. In addition to this manual, field servicing of the terminal requires use of the 752 Keyboard Display Terminal Operators Guide/Reference Manual/Installation Instructions and may require use of the Matrix Printer Reference and Field Service manual if the terminal is configured with an impact printer as a peripheral. Following is a listing of manuals associated with the operation and maintenance of the terminal. With the exception of those manuals previously noted, most of the manuals in the listing are for use by repair center personnel.

Title	Publication Number
752 Keyboard Display Terminal Operators Guide/ Reference Manual/Installation Instructions	62957300
Video Display Unit Hardware Maintenance Manual	62961800
Nonimpact Printer Hardware Maintenance Manual	62952500
Matrix Printer Operator Handbook	76670900
Matrix Printer Reference and Field Service Manual	95390800
Matrix Printer Family Spare Parts List	95366300

* IBM is a trademark of International Business Machines Corporation.

Title	Publication Number
Matrix Printer Parts Identification Manual	76671100
Matrix Printer Equipment Field Service and Reference Manual	95445026
Matrix Printer Equipment Parts Identification Manual	95445025

These manuals along with previously listed manuals are available from:

Control Data Corporation
Literature and Distribution Services
304 North Dale Street
St. Paul, Minnesota 55103

CONTENTS

Section			Page
1	—	GENERAL DESCRIPTION	
		Functions	1-2
		Features	1-2
		Display Unit	1-3
		Power Supply	1-3
		Video Display Assembly	1-3
		Logic Module Assembly	1-4
		Keyboard Assembly	1-4
		Operator Controls	1-7
		System/Display Terminal Interface	1-8
		Nonimpact Printer	1-10
		Print Mechanism	1-12
		Interface and Control Logic Cards	1-12
		Power Supply	1-12
		55-Lines Per Minute (LPM) Impact Printer	1-12
		Print Mechanism	1-14
		Interface and Control Logic Cards	1-14
		Power Supply	1-14
		70-Lines Per Minute (LPM) Impact Printer	1-15
		Print Mechanism	1-16
		Interface and Control Logic Chassis	1-16
		Power Supply	1-16
		Features Summary	1-17
		Equipment Characteristics	1-18
		Environmental Requirements	1-19
		Display Terminal - Electrical	1-19
		Nonimpact Printer - Electrical	1-19
		55-LPM Impact Printer - Electrical	1-20
		70-LPM Impact Character Printer - Electrical	1-20
		Display Terminal - Physical	1-20
		Nonimpact Printer - Physical	1-21
		55-LPM Impact Printer - Physical	1-22
		70-LPM Impact Printer - Physical	1-23
2	—	OPERATION	2-1
3	—	INSTALLATION AND CHECKOUT	3-1

Section Page

4 — THEORY OF OPERATION

Keyboard Assembly 4-2
Video Display Assembly 4-5
Cathode-Ray Tube (CRT) 4-5
Vertical Choke 4-5
Monitor PC Board 4-6
+15-V Regulator Assembly 4-7
CRT Yoke and CRT Cap 4-8
High-Voltage Transformer 4-8
Logic Module Assembly 4-8
Rear Panel Assembly 4-11
Power Supply Assembly 4-12
Nonimpact Printer 4-15
Impact Printer 4-21
Miscellaneous Terminal Components 4-21

5 — DIAGRAMS

Logic Diagram Contents Sheet 5-3
Key to Diagrams Physical Location Codes 5-4
Key to Symbols 5-5
Diagram 100 — Main Timing, Horizontal Scan, and Vertical Counters 5-6
Diagram 101 — Horizontal and Vertical Control, Vertical Address Counter, and Read/Write Control 5-8
Diagram 102 — Memory Output Latch, Character Generator, Video Serializer, Blink Counter, Display Cursor Flip-Flop 5-10
Diagram 103 — Y Cursor Counter and Mux, and Video Driver Circuit 5-14
Diagram 104 — Cursor Function Decode, Cursor Position Decode, Last Line Counter 5-16
Diagram 105 — UART, X Compare, Cursor Compare 5-18
Diagrams 106 and 107 — Memory Bank A and Memory Bank B 5-22
Diagram 108 — Clear Control, Receive, and Keyboard Control 5-26
Diagram 109 — Memory Address Conversion, Data Decode 5-30
Diagram 110 — Baud Counter, Modem Control 5-32
Diagram 111 — Phase Lock Oscillator, Current Loop Receive and Transmit 5-34
Diagram 112 — Internal Switches, Break and Alarm, Last-Line Compare 5-36

Section		Page
	Diagram 113 — X Cursor Control, Y Cursor Control, and X Cursor Control	5-38
	Diagram 114 — Modem Interface, RTS Control	5-40
	Diagram 115 — Baud Select, X/Y Position Control	5-44
	Timing Diagram	5-46
	Block Diagram	5-49
	Memory Address Conversion, Data Decode	5-50
	X Cursor Control, Y Cursor Control, X Cursor Counter	5-51
	AC/DC Power Interconnect Diagram	5-52
	Schematic Diagram, MET Power Supply	5-53
	Interconnection Diagram Signal	5-54
	Schematic Diagram, 6CTD-0 (Rear Panel Interconnect)	5-55
	Schematic Diagram Video Display Electronics Non Composite Video (6BND-0) (62201017)	5-56
	Schematic Diagram 6BND-0 (Non Composite Video Board) (90460618)	5-58
	Schematic Diagram Regulator Assy (+15V)	5-63
	Diagram 120-0200	5-64
	Diagram 120-0146	5-68
	Schematic Diagram, MET Power Supply	5-70
6 —	MAINTENANCE	
	Suggested Emergency Maintenance Procedure	6-1
	Maintenance Aids	6-3
	Preventive Maintenance	6-3
	Keyboard Display PMTs	6-3
	Keyboard Display PMTPs	6-4
	Nonimpact Printer PMTs	6-5
	Nonimpact Printer PMTPs	6-6
	55-LPM Impact Printer PMTs	6-8
	55-LPM Impact Printer PMTPs	6-9
	70-LPM Impact Printer PMTs	6-12
	70-LPM Impact Printer PMTPs	6-12
	Diagnostic and Corrective Maintenance	6-17
	Diagnostic Tables	6-17
	Conditions Quadrant	6-18
	Situations Quadrant	6-18
	Sequence Quadrant	6-20
	Actions Quadrant	6-21
	General Instructions	6-21
	DDLTs and Procedures	6-21
	Procedure TS1 — Turning On Subsystem Power	6A-2
	Procedure TS2 — Turning Off Subsystem Power	6A-3
	Procedure TS3 — Removing/Replacing Subsystem Cables	6A-3
	Procedure TS4 — Checking Subsystem Cables	6A-4
	Procedure TS5 — Removing/Replacing Subsystem Equipments	6A-4

Section		Page
	Procedure TS6 — Terminal Subsystem Checkout	6A-5
	Procedure CRT1 — Turning On Display Terminal Power	6B-5
	Procedure CRT2 — Turning Off Display Terminal Power	6B-5
	Procedure CRT3 — Checking the Keyboard	6B-5
	Procedure CRT4 — Replacing the Keyboard	6B-7
	Procedure CRT5 — Removing the Display Cabinet Hood	6B-8
	Procedure CRT6 — Check/Replace Rear Panel Components	6B-9
	Procedure CRT7 — Check/Replace Power Supply Assembly	6B-13
	Procedure CRT8 — Check/Replace 15-V Regulator Components	6B-17
	Procedure CRT9 — Measuring Voltages on Monitor PC Board	6B-20
	Procedure CRT10 — Video Monitor Adjustments	6B-21
	Procedure CRT11 — Check/Replace Front-Panel Intensity Control	6B-25
	Procedure CRT12 — Replacing Monitor PC Board	6B-26
	Procedure CRT13 — Replacing High-Voltage Transformer	6B-27
	Procedure CRT14 — Replacing the Vertical Choke	6B-28
	Procedure CRT15 — Check/Replace CRT Cap	6B-29
	Procedure CRT16 — Replacing Monitor CRT	6B-30
	Procedure CRT17 — Replacing CRT Yoke	6B-32
	Procedure CRT18 — Replacing Video Monitor Assembly	6B-34
	Procedure CRT19 — Check/Replace Audible Alarm	6B-35
	Procedure CRT20 — Replacing Control Logic PC Board	6B-36
	Nonimpact Printer Corrective Maintenance Procedures — General	6C-3
	Procedure NIP1 — Paper Loading and Power On	6C-3
	Procedure NIP2 — 1-kHz Oscillator Adjustment	6C-4
	Procedure NIP3 — Retriggerable One-Shot (ROS) Adjustment	6C-4
	Procedure NIP4 — Brake LED Block and Brake One-Shot Adjustment	6C-5
	Procedure NIP5 — Head Compensating Circuit Adjustment	6C-6

Section | Page

Procedure NIP6 — Carriage Return LED Block Adjustment 6C-6
Procedure NIP7 — Printhead Actuation Adjustment 6C-10
Procedure NIP8 — Print Quality Adjustments 6C-12
Procedure NIP9 — Out-of-Paper Switch Adjustment 6C-12
Procedure NIP10 — Serial Input Clock Adjustment 6C-13
Procedure NIP11 — Replacing Print Mechanism ... 6C-14
Procedure NIP12 — Replacing Power Supply 6C-15
Procedure NIP13 — Replacing/Adjusting Miscellaneous Parts 6C-15
55-LPM Impact Printer Corrective Maintenance Procedures — General 6D-5
Procedure 551MP1 — Turning On Impact Printer Power 6D-6
Procedure 551MP2 — Turning Off Impact Printer Power 6D-8
Procedure 551MP3 — Installing/Aligning Paper Forms in Impact Printer 6D-8
Procedure 551MP4 — Installing Ribbon in Impact Printer 6D-10
Procedure 551MP5 — Installing Format Tape in Impact Printer 6D-12
Procedure 551MP6 — Opening/Removing Impact Printer Cabinet 6D-13
Procedure 551MP7 — Removing/Replacing Logic Chassis PC Board 6D-14
Procedure 551MP8 — Checking/Setting Internal Switches and Jumpers 6D-15
Procedure 551MP9 — Removing/Replacing Driver PC Board 6D-15
Procedure 551MP10 — Removing/Replacing Line Start PC Board 6D-16
Procedure 551MP11 — Removing/Replacing Character Start PC Board 6D-16
Procedure 551MP12 — Check/Replace Fuses 6D-17
Procedure 551MP13 — Removing/Replacing Internal Cables 6D-18
Procedure 551MP14 — Checking Internal Cables .. 6D-19
Procedure 551MP15 — Mechanical Checks/ Adjustments 6D-20
Procedure 551MP16 — Electrical Checks/ Adjustments 6D-20

Section | Page

Procedure 551MP17 — Parts Replacement 6D-21
70-LPM Impact Printer Corrective Maintenance Procedures — General 6E-5
70-LPM Printer Status/Errors Indicators 6E-5
Procedure 701MP1 — Powering On Printer 6E-7
Procedure 701MP2 — Installing/Aligning Paper Forms 6E-8
Procedure 701MP3 — Replacing Ribbon Cassette .. 6E-10
Procedure 701MP4 — Installing/Loading Format Tape 6E-10
Procedure 701MP5 — Removing/Installing Cabinet Covers 6E-14
Procedure 701MP6 — Replacing Power Supply, Controller/Head Logic Board and RS-232 Interface Board 6E-15
Procedure 701MP7 — Replacing Needle Driver Board 6E-16
Procedure 701MP8 — Replacing Vertical Transducer Board 6E-17
Procedure 701MP9 — Checking/Setting Internal Switches and Jumpers 6E-18
Procedure 701MP10 — Checking/Replacing Fuses .. 6E-18
Procedure 701MP11 — Checking Internal Cables .. 6E-18
Procedure 701MP12 — Replacing Internal Cables .. 6E-19
Procedure 701MP13 — Replacing Printhead 6E-19

INDEX 6-27

7 —— PARTS DATA

Genealogy Chart 7-1
Parts Data 7-1
Spare Parts Data 7-2
752 Display Term. (SPL) 7-3
Mod I Display Term. W/O Kybd 7-5
SPL — LIAT Mod I 7-7
Spare Parts List, Typewriter Keyboards 7-10
SPL Printer, Serial, Thermal 60 Hz 7-12
SPL Printer, Serial, Thermal 50 Hz 7-13
Genealogy Chart 752 Display 7-14
Genealogy Chart Mod I Display W/O Keyboard 7-15
Genealogy Chart (66300756) (CA150 A) 7-16
Genealogy Chart 83 Key Kybd 7-17
Genealogy Chart (66300758) (CA150 C) 7-18
Genealogy Chart 82 Key Kybd Ftz 7-19
752 Display Terminal 7-20
Term Mod I Exp HL 60Hz (TA) 7-23
Term Mod I Exp/Ftz HL 50Hz (TA) 7-25

Section Page

Term Mod I Exp C/H 60 Hz (TA) 7-27
Term M-1 Exp/Ftz C/H 50 Hz (TA) 7-29
Term Mod I Exp HL 50 Hz (TA) 7-31
Term Mod I Exp C/H 50 Hz (TA) 7-33
Mod I Display Terminal W/O Kybd 7-35
Mod I W/O Kybd 60 Hz (TA) 7-37
Mod I W/O Kybd 50 Hz (TA) 7-39
Mod I CL W/O Kybd 60 Hz (TA) 7-41
Mod I CL W/O Kybd 50 Hz (TA) 7-43
Power Supply Assembly 7-45
P.C. Card Assembly, 7BKD (Power Supply Module) 7-48
P.C. Card Assembly, 9BBD (Power Supply Module) 7-50
P.C. Card Assembly, 6AFD-0 (MET Power Supply) 7-52
Heat Sink Assembly 7-54
Heat Sink Assy LIAT Mod I 7-55
W/L Heat Sink Assy 7-56
W/L Power Supply, (61405800) (CC5B1-A) 7-57
W/L Power Supply, (61407980) (CC5B1-A) 7-58
Cable Assy Kybd Internal 7-59
Cable Assy DC Power 7-62
Ground Wire Assy. 7-64
Logic Module Assy (61407657) (CC555) 7-66
P.C. Card Assy, 6CUD-0 (Logic Module) 7-68
P.C. Card Assy, 6CUD-1 (Logic Module) 7-72
P.C. Card Assy, 9ASD (Logic Module) 7-76
Logic Module Assy, (61408367) (CC555-1) 7-76.4
P.C. Card Assy, 8CAD (Logic Module) 7-78
P.C. Card Assy, 9AUD (Logic Module) 7-82
Logic Module Assy, (61407656) (CC555) 7-82.4
P.C. Card Assy, 6CVD-0 (Logic Module W/Current Loop) . . 7-84
P.C. Card Assy, 6CVD-1 (Logic Module W/Current Loop) . . 7-88
P.C. Card Assy, 6CVD-2 (Logic Module W/Current Loop) . . 7-92
P.C. Card Assy, 9ATD (Logic Module W/Current Loop) 7-96
Logic Module Assy, (61408368) (CC555-M) 7-96.4
P.C. Card Assy, 8CBD (Logic Module W/Current Loop) 7-98
P.C. Card Assy, 9AVD (Logic Module W/Current Loop) . . . 7-102
Rear Panel Assy, 60 Hz, (61407635) (CC555) 7-102.4
Rear Panel Assy, 60 Hz (61407798) (CC560) 7-104
Rear Panel Assy, 60 Hz (61408216) (CC555-A) 7-106
W/L Rear Panel Assy 60 Hz (61407630) (CC555) 7-108
W/L Rear Panel Assy 60 Hz (61408220) (CC555-A) 7-109
P.C. Card Assembly, 6CTD-0 (Rear Panel Signal Wiring) . . . 7-110
P.C. Card Assembly, 6CTD-1 (Rear Panel Signal Wiring) . . . 7-112
Rear Panel Assy, 50 Hz (61407633) (CC555) 7-114
Conn, Jumper Plug Assy 7-116
Rear Panel Assy, 50 Hz (61408215) (CC555-B) 7-119

Section | Page

W/L Rear Panel Assy 50 Hz (61407632) (CC555) 7-122
W/L Rear Panel Assy 50 Hz (61408219) (CC555-B) 7-123
PC Card Assembly 6CTD-1 (Rear Panel Signal Wiring) 7-124
Keyboard Assembly 80 Key 7-125
Cable Assy Keyboard External (61370500) (CC614/CC6B1) 7-128
Keyboard Assembly 80 Key (Shielded) 7-132
Cable Assy Keyboard External (61407519) (CC6B1D) 7-134
Keyboard Assembly 82 Key 7-138
Keyboard Assembly 82 Key (Shielded) 7-140
Cable Assy Keyboard External (61407894) (CA150 B) 7-142
Video Display Assembly Non-Composite (61370905) (CC6B1C) 7-146
Video Display Assembly Non-Composite (61407969 thru 61407978) (CC614A) 7-149
P C Card Assy 6BND-1 (Non-Composite Video) 7-153
P C Card Assy 6BND-0 (Non-Composite Video) 7-158
Regulator Assy (+15 Volts) 7-162
W/L Regulator Assy (+15V) 7-164
CRT Ground Clip Assy 7-166
Cable Assy — Yoke 7-168
CRT Socket Assy (61407540) (CC614D) 7-170
CRT Socket Assy (61407857) (CC5B1) 7-172
W/L Video Display (61378200) (CC614) 7-174
Wire List — Video Display (61407979) (CC614A) 7-176
Choke Assy (61407419) (CC6B1A-B) 7-177
High Voltage Transformer Assy (61407417) (CC6B1A/B) . . . 7-180
High Voltage Transformer Assy (61407695) (CC6B1A/B) . . . 7-184
High Voltage Transformer Assy (61408075) (CC617A/B/C) . . 7-188
Cable Assy Video Display (61407420) (CC6B1A,B) 7-192
Front Panel Assembly, Mod I 7-194
Intensity Control Cable Assy 7-196
Cable Assembly Rear Panel — Monitor 7-198
Adapter Matrix 7-203
Adapter Cable Assy 61407806 7-204
Adapter Cable Assy 61407807 7-207
Adapter Cable Assy 61407808 7-210
Adapter Cable Assy 61407809 7-213
Adapter Cable Assy 61407810 7-216
Adapter Cable Assy 61407811 7-219
Adapter Cable Assy 61407812 7-222

8 —— WIRE LISTS 8-1

APPENDIXES

A	—	CODES AND CHARACTER SETS	A-1
B	—	MOS CIRCUIT PRECAUTIONS	B-1
C	—	KEYBOARD DISPLAY TERMINALS FOR SERIES/1 SYSTEMS	C-1

FIGURES

Section	Figure		Page
1	—	GENERAL DESCRIPTION	
	1-1	Display Terminal Configuration	1-2
	1-2	Display Unit Components	1-3
	1-3	Keyboard Layout	1-5
	1-4	Display Terminal Rear Panel	1-7
	1-5	Nonimpact Printer	1-11
	1-6	Nonimpact Printer Components	1-11
	1-7	55-LPM Impact Printer	1-13
	1-8	55-LPM Impact Printer Components	1-13
	1-9	70-LPM Impact Printer	1-15
	1-10	Display Terminal Dimensions	1-21
	1-11	Nonimpact Printer Dimensions	1-22
	1-12	55-LPM Impact Printer Dimensions	1-22
	1-13	70-LPM Impact Printer Dimensions	1-23
4	—	THEORY OF OPERATION	
	4-1	Functional Block Diagram of Display Terminal	4-1
	4-2	Keyboard Module	4-2
	4-3	Location of Video Display Subassemblies	4-6
	4-4	+15-V dc Regulator Assembly	4-7
	4-5	Location of Logic Module Assembly PC Board in Display Terminal	4-9
	4-6	Logic Module Assembly PC Board Block Diagram	4-10
	4-7	Terminal Rear Panel Location and Layout	4-12
	4-8	Top and Front Views of Power Supply Module	4-13
	4-9	Location of Power Supply in Display Terminal	4-14
	4-10	Nonimpact Printer Subassemblies	4-15
	4-11	Nonimpact Printer Wiring Harness	4-16
	4-12	Nonimpact Printer Block Diagram	4-17
	4-13	Nonimpact Printer Print-Mechanism Assembly	4-17
	4-14	Nonimpact Printer Character Print Timing	4-18

Section	Figure		Page
	4-15	Nonimpact Printer Line Feed Operation Timing	4-20
	4-16	Nonimpact Printer Carriage Return Operation Timing	4-20
	4-17	Interface Connection Routing of Back-to-Back Adapter Cables	4-23
6 —		MAINTENANCE	
	6-1	Printer Check Items	6-14
	6-2	Example of a Diagnostic Decision Logic Table	6-19
	6-3	Arrangement of Diagnostic and Corrective Maintenance Information	6-23
	TS1	Terminal Cabling	6A-14
	TS2	Data Set Connector Pin Assignments for Unipolar, Full-Duplex, Current Loop Communication Channel	6A-15
	TS3	Data Set Connector Pin Assignments for Unipolar, Half-Duplex, Current Loop Communication Channel	6A-15
	TS4	Raster Display	6A-16
	TS5	Impact Printer Test Print Pattern	6A-17
	CRT1	Keyboard Display Internal Switches and Controls	6B-38
	CRT2	Control Code Dot Matrix Formations and Octal Codes	6B-39
	CRT3	Keyboard Module Components	6B-40
	CRT4	Keyboard Display Cabinet Hood Removal	6B-40
	CRT5	CP2/CJ2 and Rear Panel Locations	6B-41
	CRT6	Rear Panel Removal and Connections	6B-42
	CRT7	Monitor Assembly and Bezel Screw Removal	6B-43
	CRT8	Power Supply Module Layout and Input/Output Voltages	6B-44
	CRT9	+15-V dc Regulator Location	6B-45
	CRT10	+15-V dc Regulator Assembly Detail (Rear View)	6B-46
	CRT11	Monitor PC Board Voltages	6B-47
	CRT12	Location of Video Monitor Adjustments	6B-47
	CRT13	Yoke Adjustments	6B-48
	CRT14	Monitor PC Board Adjustments	6B-48
	CRT15	Character Resolution	6B-49
	CRT16	Applying Overlay to CRT Screen	6B-53
	CRT17	Identifying Display Distortion	6B-53
	CRT18	Attaching Correction Magnet to Dowel	6B-53
	CRT19	Magnet Placement and Distortion Correction	6B-54
	CRT20	Intensity Control Assembly Location	6B-55
	CRT21	Monitor PC Board Connections	6B-56
	CRT22	Monitor PC Board Placement	6B-56
	CRT23	High-Voltage Transformer Installation	6B-57
	CRT24	CRT Cap Removal	6B-58

Section	Figure		Page
	CRT25	CRT Yoke Assembly	6B-58
	CRT26	Static Discharge Spring Location	6B-59
	CRT27	Position of Shielding Sleeve	6B-59
	CRT28	Monitor Assembly Removal	6B-60
	CRT29	Location of Audible Alarm and Control Logic PC Board	6B-61
	NIP1	Paper Loading, Nonimpact Printer	6C-16
	NIP2	Printer, Front View	6C-17
	NIP3	Printer, Right Side View	6C-18
	NIP4	Printer, Right Front View	6C-19
	NIP5	Printhead Home Position	6C-19
	NIP6	Guide Bar Arm Travel	6C-20
	NIP7	Damper Pad Adjustment	6C-20
	NIP8	Printer Rear View	6C-21
	NIP9	Serial Clock Timing	6C-21
	NIP10	Location of Major Replaceable Modules	6C-22
	551MP1	Forms Installing/Aligning in Impact Printer	6D-23
	551MP2	Ribbon Path in Impact Printer	6D-24
	551MP3	Ribbon Positioning on Spools	6D-24
	551MP4	Format Tape Path in Impact Printer	6D-25
	551MP5	Format Tape Characteristics	6D-25
	551MP6	Logic Chassis Board Locations	6D-26
	551MP7	Internal Switches and Jumpers (RS-232-C Interface Board)	6D-27
	551MP8	Solenoid Driver Board with Fuse Identification	6D-28
	551MP9	Power Supply Board with Fuse Identification	6D-29
	551MP10	Impact Printer Major Assemblies	6D-30
	551MP11	Impact Printer Internal Connectors	6D-31
	551MP12	60-Hz AC Distribution	6D-32
	551MP13	Universal AC Distribution	6D-33
	551MP14	DC Distribution and Ribbon Logic	6D-34
	551MP15	Configuration Drawing	6D-35
	551MP16	Chassis Map	6D-36
	701MP1	Impact Printer Controls and Indicators	6E-21
	701MP2	Paper Forms Installation	6E-22
	701MP3	Printhead Line Finder	6E-22
	701MP4	Ribbon Cassette Replacement	6E-23
	701MP5	Format Tape Installation	6E-23
	701MP6	Printer Cabinet Covers	6E-24
	701MP7	RS-232 Interface Card and Rack	6E-25
	701MP8	Controller/Head Logic and Power Supply Boards	6E-26
	701MP9	Controller/Head Logic Board Switch Settings	6E-26
	701MP10	Fuses on Power Supply Board	6E-27
	701MP11	Needle Driver Board	6E-27

Section	Figure		Page
	701MP12	Vertical Transducer Board Installation	6E-28
	701MP13	70-LPM Impact Printer Internal Switches and Jumpers (RS-232-C Board)	6E-29
	701MP14	Fuses on Power Supply Board	6E-30
	701MP15	Printer Internal Cabling	6E-31
	701MP16	Printhead Replacement	6E-32
	701MP17	Test Print Sample	6E-32
	701MP18	Punching Format Tape	6E-33

TABLES

Section	Table		Page
1 —	GENERAL DESCRIPTION		
	1-1	Available Terminal Configurations	1-1
	1-2	Peripheral Connector Pin Assignments	1-8
	1-3	Voltage Level Channel Interface Connector Pin Assignments	1-9
4 —	THEORY OF OPERATION		
	4-1	Keyboard Interface Signal Units	4-4
5 —	DIAGRAMS		
	5-1	Logic Module Assembly Test Point Data	5-2
6 —	MAINTENANCE		
	6-1	Keyboard Display PMTs	6-4
	6-2	Nonimpact Printer PMTs	6-5
	6-3	55-LPM Inpact Printer PMTs	6-8
	6-4	70-LPM Impact Printer PMTs	6-12
	TS1	DDLT for Terminal Subsystem	6A-1
	TS2	Voltage Level Channel (RS-232-C/CCITT V.24) Interface Connector Pin Assignments	6A-18
	TS3	Peripheral Connector Pin Assignments	6A-18
	TS4	Keyboard Interface Signal Lines	6A-19
	CRT1	DDLT for Keyboard Display	6B-1
	CRT2	DDLT for Keyboard Display	6B-2
	CRT3	DDLT for Keyboard Display	6B-3
	NIP1	DDLT for Nonimpact Printer	6C-1
	NIP2	Print Quality	6C-22

Section	Table		Page
	55IMP1	DDLT for 55-LPM Impact Printer	6D-1
	70IMP1	DDLT for 70-LPM Impact Printer	6E-1
	70IMP2	DDLT for 70-LPM Impact Printer	6E-2
	70IMP3	DDLT for 70-LPM Impact Printer	6E-3
	70IMP4	DDLT for 70-LPM Impact Printer	6E-4
	70IMP5	Printer Status/Error Indicator Codes	6E-6
7 —	PARTS DATA		
	7-1	Explanation of Column Headings on Computer-Generated Assembly Parts Lists	7-2

This section describes the general functions, features, and equipment characteristics of the 752 Keyboard Display Terminal and of the three printers that may be associated with the terminal. It includes descriptions of both the basic terminal and its available variations.

The basic terminal is a 50- or 60-Hz terminal with an 80-key or 82-key keyboard and a modem interface. The user can select 60-Hz versions of the terminal with a current loop interface for connection to a current loop communication facility, or he can select 50-Hz versions with a current loop interface and/or FTZ-approved shielding.* The terminal can be selected with or without keyboard. The features incorporated in each type of 752 Keyboard Display Terminal are indicated with Xs in table 1-1. See appendix C for information on two more configurations; they are compatible with IBM** Series/1 systems.

TABLE 1-1. AVAILABLE TERMINAL CONFIGURATIONS

TERMINAL TYPE	60 Hz	50 Hz	CURRENT LOOP	FTZ SHIELDING	SUPPLIED WITH KEYBOARD	SUGGESTED KEYBOARD			
						CC150-A*	CC150-B*	CC150-C*	CC150-D*
752-10 (CC555-A)	X	–	–	–	X	–	–	–	–
752-20 (CC555-B)	–	X	–	X	X	–	–	–	–
752-11 (CC555-C)	X	–	X	–	X	–	–	–	–
752-12 (CC555-D)	–	X	X	X	X	–	–	–	–
Undesignated (CC555-E)	–	X	–	–	X	–	–	–	–
Undesignated (CC555-F)	–	X	X	–	X	–	–	–	–
Undesignated (CC555-G)	X	–	–	–	–	X	X	–	–
752-40 (CC555-H)	–	X	–	X	–	–	–	X	X
QSE 21830 (CC555-J)	X	–	X	–	–	X	X	–	–
752-41 (CC555-K)	–	X	X	X	–	–	–	X	X

* These keyboards are documented as separate equipments but are described in this manual. CC150-A and CC150-C are 80-key keyboards; CC150-B and CC150-D are 82-key keyboards.

* FTZ (Fernmelde Technisches Zentralamt) is a German licensing agency that sets limits on the radio frequency emissions generated by electrical and electronic devices. Many European countries have adopted FTZ requirements for shielding of electronic equipment in order to control the level of stray radio frequencies in the atmosphere.

** IBM is a trademark of International Business Machines Corporation.

The display terminal is available with either a nonimpact thermal printer or an impact printer. The display terminal with the three printer versions, is shown in figure 1-1.

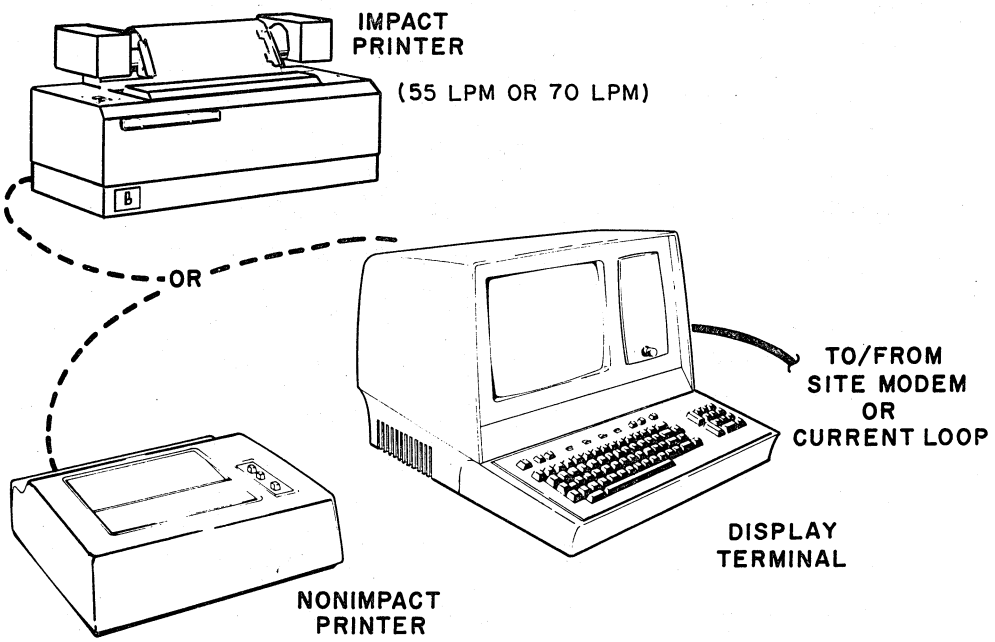

Figure 1-1. Display Terminal Configurations

FUNCTIONS

The display terminal functions as a stand-alone, remote input/output device for a computer system. It performs input and terminal control functions via a detachable keyboard assembly, and it monitors both input and output functions on a 12-inch crt display screen. Included within the display terminal are all of the necessary electronics, including an asynchronous, bit-serial, word-serial, communication facility interface, to permit it to operate in conversational mode in the same manner as a teletypewriter unit. The display terminal, however, incorporates many features not commonly found in teletypewriter terminals. The addition of one of the available printer peripherals provides the terminal with hardcopy printout capabilities.

FEATURES

The following text highlights six major features of the terminal. These are the display unit, keyboard, operator control, system/terminal inteface, nonimpact printer, and impact printers. A features summary list follows the six major features. Other portions of this manual describe many of these features in greater detail; this portion of text provides brief descriptions and a features summary to facilitate familiarization and comparison.

DISPLAY UNIT

The display unit of the terminal is self-contained and includes a video display assembly, a logic module assembly, and a power supply. The keyboard, communication line, and printer unit interfaces are part of the logic PC board. The location of major components within the display unit is shown in figure 1-2.

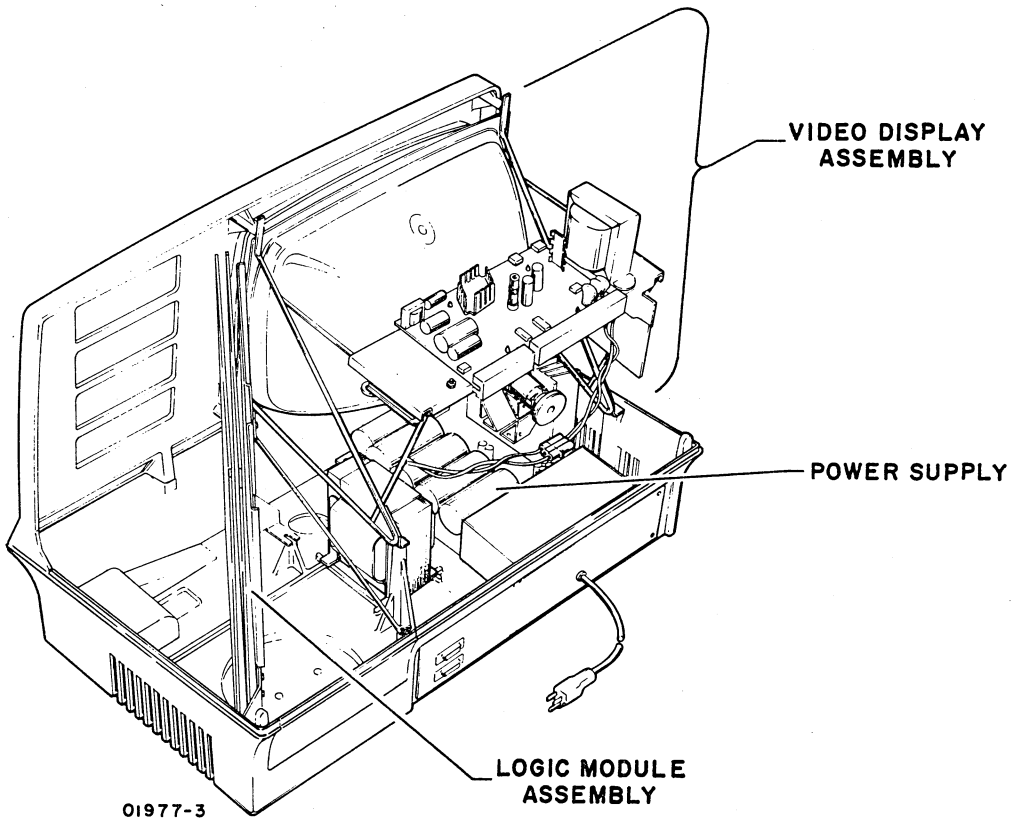

Figure 1-2. Display Unit Components

Power Supply

The power supply furnishes all necessary voltages for the display unit from either 115 V ac or 220/240 V ac (nominal), 50- or 60-Hz power input sources.

Video Display Assembly

The video display assembly uses a 12-inch (diagonal measurement) crt, having a P4 white-phosphor coating and a nonglare faceplate. Nominal raster area on the display screen is an area approximately 7.8 in by 5 in (198 mm by 127 mm). This area can display 24 lines of up to 80 characters per line, with each character displayed in a 7- by 9-dot matrix. Character display is accomplished by selectively blanking and unblanking the dots within this matrix. A display character refresh memory holds all the characters for display and refreshes the display screen at a rate equal to the frequency of the ac input power (50 or 60 Hz).

Logic Module Assembly

The display recognizes and generates 128 character codes; the 95 alphanumeric character codes recommended by American National Standards Institute (ANSI) standard X3.4-1968, and the 33 control codes recommended by ANSI standard X3.1973. During actual operation, the unit displays all 95 alphanumeric characters and responds to 13 of the 33 control codes as they are received. This leaves 20 control codes for use in specific functions or operations (refer to appendix of this manual for transmit/receive code set). All 128 codes can be transmitted during normal online operation of the terminal.

Character entries onto the display screen occur upon code reception or are made via the keyboard. To ensure entry at the desired screen location, a blinking cursor underscores the location of the next character entry. During consecutive character entries, the cursor progresses across a display line through all 80 character positions. At character position 73, a beeper signal sounds to warn the operator that the end of a line is approaching. This line-by-line manner of cursor advance continues until the last character position of the last line is reached. As that character is keyed in, the cursor resets to its home position (upper left corner of display area) or causes the display to scroll; that is, the cursor returns to the beginning of the last line while all lines already entered scroll up one line (the first line is lost as it scrolls off the screen).

Construction of the display unit is modular as indicated in figure 1-2. All circuits are solid-state, and with the exception of some of the power supply and high voltage circuits, all use integrated circuit technology.

KEYBOARD ASSEMBLY

The keyboard assembly, hereafter referred to as keyboard, serves as both a terminal control and data input unit for the display terminal operator. The terminal control function of the keyboard is discussed briefly in the following portion of this section and more thoroughly in the operation section of the associated Operators Guide/ Reference Manual (see preface). This portion of the text deals principally with the keyboard as a data input unit.

Two configurations of keyboard layout are available to the terminal operator as shown in figure 1-3. One is an 80-key keyboard and the other is an 82-key keyboard. Although the keyboards have different key layouts, they attach to and function with the terminal in much the same manner.

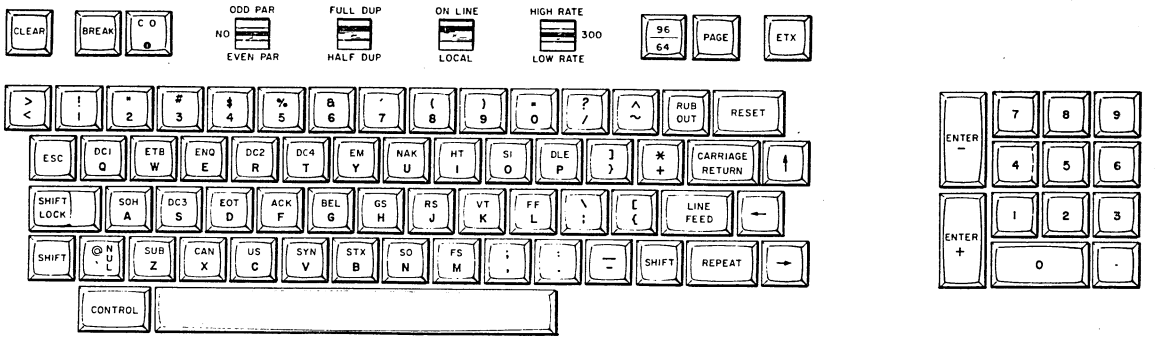

01499-6

80-KEY KEYBOARD

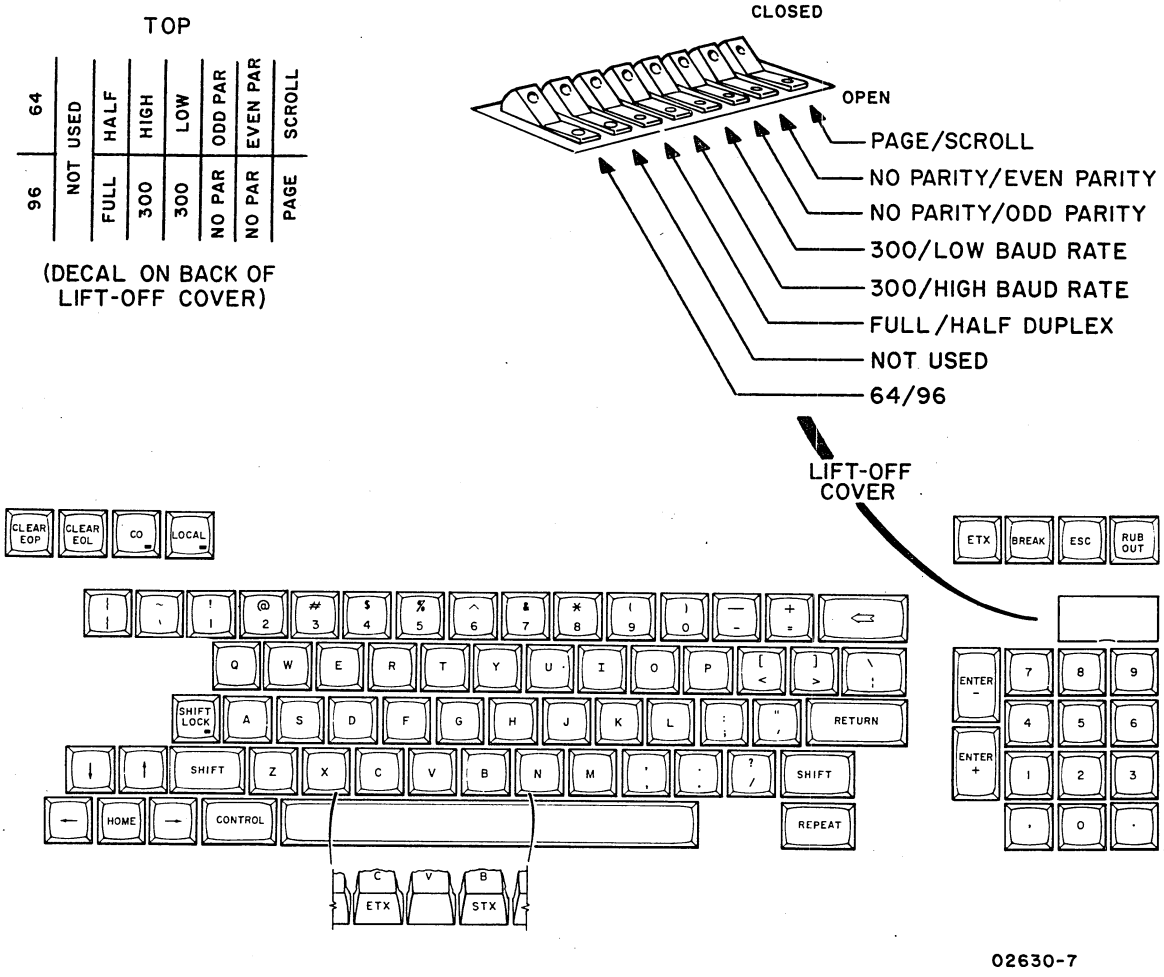

02630-7

82-KEY KEYBOARD

Figure 1-3. Keyboard Layout

Each keyboard is equipped with a main cluster similar in appearance to a standard typewriter keyboard. To the right of the main key cluster are keys for editing and numeric operation. At the top, just above the main key cluster, are keys for transmission control and special functions. These keys are part of the operator control group, explained later, and include the controls most commonly used by the operator during display terminal operation.

The operator control keys are included with the top row (80-key keyboard) as shown in figure 1-3. Operator controls for the 82-key keyboard are shown mounted beneath a lift-off cover.

The keyboard is a modular unit that attaches to the display unit via an interconnecting cable approximately 30 to 32 inches in length. All power required by the keyboard comes from the display unit power supply via this cable, and all data control codes generated by the keyboard are passed on to the logic circuits of the display unit via this same cable.

The keyboard features trilevel operation; that is, it operates in lowercase mode, uppercase mode (SHIFT key actuated), and in control mode (CONTROL and character keys actuated, or SHIFT, CONTROL, and character keys actuated). In this manner, the keyboard can be used to generate a full 128-character, ANSI-compatible code set. The complete character and code sets used in the display terminal are included in the appendix of this manual.

Data entry from the keyboard is accomplished by typing in the desired control codes and/or alphanumeric characters on the keyboard. During online operation, transmission occurs as each key is pressed regardless of the state of any other keys on the keyboard. As a message is typed out and sent in the half-duplex mode of terminal operation, it displays on the screen of the display unit to permit visual verification of proper message format and content.

Additional message verification is provided in full-duplex mode operation, which permits only received data to be displayed (such as transmitted data echoed back from the receiving station). Regardless of the transmission mode selected, where the data is displayed on the screen depends on the operating mode selected (page or scroll) and on the position of the cursor as data entry begins.

OPERATOR CONTROLS

The display terminal has operator controls located on the keyboard and on the front and rear panels of the display unit. The controls most commonly used by the operator during display terminal operation are located on the keyboard assembly. Following is a list of these keyboard controls; their functions are described more thoroughly in the associated Operators Guide/Reference Manual (see preface).

- CO indicator — on terminals having a voltage level interface, this indicator lights to indicate the data set (modem) is ready and a carrier frequency signal is being received from the distant station.
- ODD PAR/NO/EVEN PAR switch — selects odd, even, or no parity check/generate functions of the terminal.
- FULL DUP/HALF DUP switch — directs transmit data to either the communication interface only (FULL DUP) or to both the communication interface and the display/printer interface.
- ON LINE/LOCAL switch — selects online or offline mode of display terminal operation.
- HIGH RATE/300/LOW RATE switch — selects transmit/receive baud rate for the terminal.
- 96/64 switch — selects 96- or 64- character code set for data transmission.
- PAGE switch — selects page or scroll mode of display operation.

Just to the right of the display screen on the front panel is a single control knob. This is the INTENSITY control knob, used to adjust the intensity of the crt display to suit ambient lighting conditions in the area of display terminal installation.

The display terminal rear panel, shown in figure 1-4, has the data set and peripheral connectors, a test switch, the ac power cord, and circuit breaker CB1. CB1 serves as the terminal on/off switch, and is used to apply or remove ac power to the terminal. The test switch is for use when testing or checking display terminal operation.

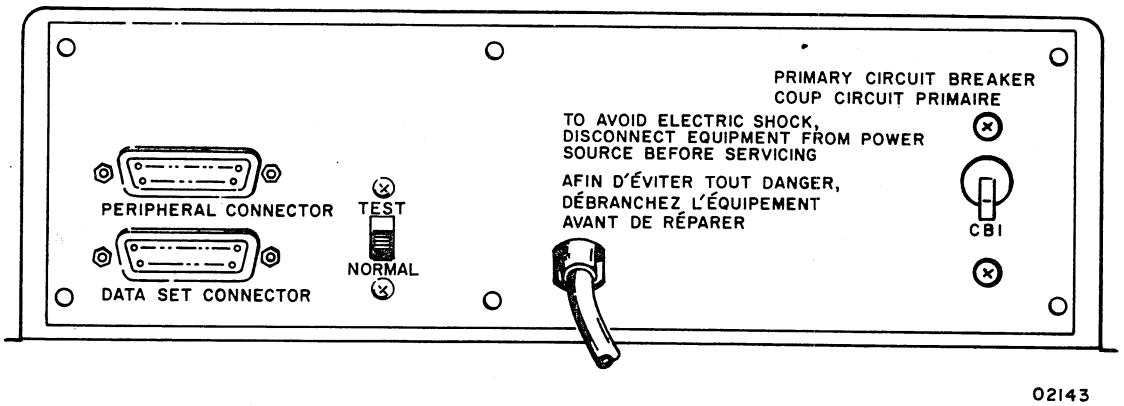

Figure 1-4. Display Terminal Rear Panel

SYSTEM/DISPLAY TERMINAL INTERFACE

The display terminal has two interface connectors on the rear panel. The PERIPHERAL CONNECTOR is used to connect either the impact printer or the nonimpact printer to the terminal. The DATA SET CONNECTOR is used to connect the terminal to the communication facility. Connector pin assignments for the peripheral connector are shown in table 1-2. Pin assignments for the data set connector vary with the type of communication facility being interfaced, either current loop or voltage level. Pin assignments for voltage level channel connections are shown in table 1-3. Pin assignments for current loop channels are much simpler and are described a little later in this portion of the text.

The printer interface is compatible with RS-232-C and CCITT V.24 recommendations for full- or half-duplex, asynchronous communication facilities. The purpose of the printer interface is to enable hardcopy records of communications to be produced via a peripheral printer. In a manner similar to the display, only received information is routed to the printer during full-duplex, online operation of the terminal; while both received and transmitted information is routed to the printer during half-duplex, online operation. Both the printer and the communication channel baud rate selectors must be set for the same transfer rates.

TABLE 1-2. PERIPHERAL CONNECTOR PIN ASSIGNMENTS

PIN NUMBER	CCITT	EIA	SIGNAL NAME	ORIGIN
1	101	AA	Protective Ground	Printer/Terminal
2	—	—	Not Used	—
3	104	BB	Received Data	Terminal
4	—	—	Not Used	—
5	—	—	Not Used	—
6	107	CC	Data Set Ready (DSR)	Terminal
7	102	AB	Signal Ground	Printer/Terminal
8	109	CF	Received Line Signal Detector (CO)	Terminal
9	—	—	Not Used	—
↓	↓	↓	↓	↓
25	—	—	Not Used	—

TABLE 1-3. VOLTAGE LEVEL CHANNEL INTERFACE CONNECTOR PIN ASSIGNMENTS

PIN NUMBER	CCITT	EIA	SIGNAL NAME	ORIGIN
1	101	AA	Protective Ground	Modem/Terminal
2	103	BA	Transmitted Data	Terminal
3	104	BB	Received Data	Modem
4	105	CA	Request to Send (RTS)	Terminal
5	106	CB	Clear to Send (CTS)	Modem
6	107	CC	Data Set Ready (DSR)	Modem
7	102	AB	Signal Ground	Modem/Terminal
8	109	CF	Received Line Signal Detector (CO)	Modem
9	—	—	Not Used	—
10	—	—	Not Used	—
11	—	—	Secondary Request to Send (SRTS)*	—
12	122	SCF	Secondary Received Line Signal Detector (SCO)	Not Used
13	121	SCB	Secondary Clear to Send (SCTS)	Not Used
14	118	SBA	Secondary Transmitted Data	Not Used
15	114	DB	Transmission Signal Element Timing	Not Used
16	119	SBB	Secondary Received Data	Not Used
17	115	DD	Receiver Signal Element Timing	Not Used
18	—	—	Not Used	—
19	120	SCA	Secondary Request to Send (SRTS)	Terminal
20	108.2	CD	Data Terminal Ready (DTR)	Terminal
21	110	CG	Signal Quality Detector	Not Used
22	125	CE	Ring Indicator	Not Used
23	111	CH	Data Signal Rate Selector	Terminal
24	113	DA	Transmit Signal Element Timing	Not Used
25	—	—	Not Used	—

* Data set connector has pin 11 jumpered to pin 19.

In local mode operation of the display terminal, keyed-in data is directed to both the display screen and to the peripheral printer, regardless of the setting of the half-duplex/full-duplex switch. Selection of local mode always disconnects the transmit interface of the display terminal, while the receive interface may be either maintained or disabled via switch conditioning within the terminal; see CONSTANT DTR Switch description in the associated Operators Guide/Reference Manual (see preface) or refer to section 5 of this manual.

The rear panel data set connector is used to interface voltage level terminals to a voltage level communication facility, and current loop terminals to a current loop communication facility. As indicated in table 1-3, terminals interfacing voltage level communication facilities use RS-232-C/CCITT V.24-compatible signals to and from the data set connector. Current loop terminals use receive and transmit circuits designed to interface a 20-milliampere current loop communication facility. The data set connector pins used on current loop terminals vary with the type of current loop facility being connected. Unipolar, half-duplex facilities use pin 2 for transmit data and pin 3 for receive data; unipolar, full-duplex facilities use pin 2 for transmit data, pin 3 for receive data, and pin 7 as a common receive/transmit channel ground.* Although all current loop terminals use the same transmit and receive circuits, internal conditioning of terminals used on a half-duplex current loop facility differs slightly from that of terminals used on a full-duplex current loop facility (refer to facing-page description for Current Loop Transmit and Receive Diagram in section 5).

With the exception of their different communication facility interfaces, voltage level and current loop terminals operate in an identical manner.

NONIMPACT PRINTER

The nonimpact printer, see figure 1-5, operates as an output peripheral device in conjunction with the display terminal. It prints a maximum of 30 characters per second (300 baud) in serial order, and checks for even character parity. A full print line is 80 characters maximum.

The printer cabinet contains the following major functional components; a print mechanism, interface and control logic cards, and a power supply. The position of these components within the printer cabinet is shown in figure 1-6.

---

* Where only 4-wire, full-duplex, current-loop communication facilities are available, the separate receive and transmit channel grounds are tied together for connection to pin 7 of the data set connector.

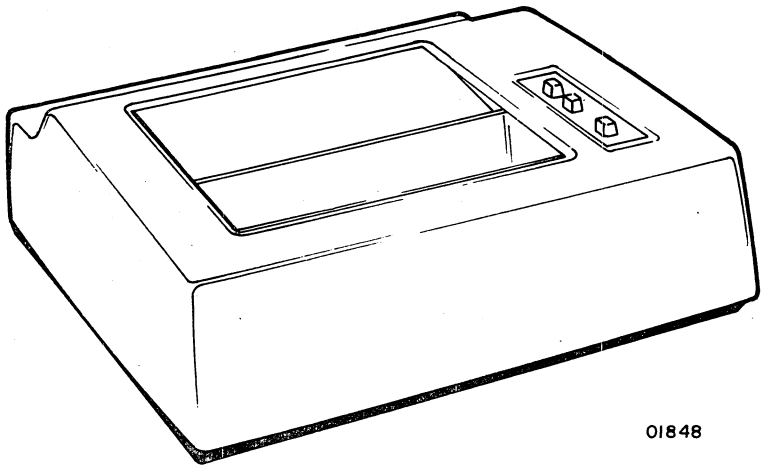

Figure 1-5. Nonimpact Printer

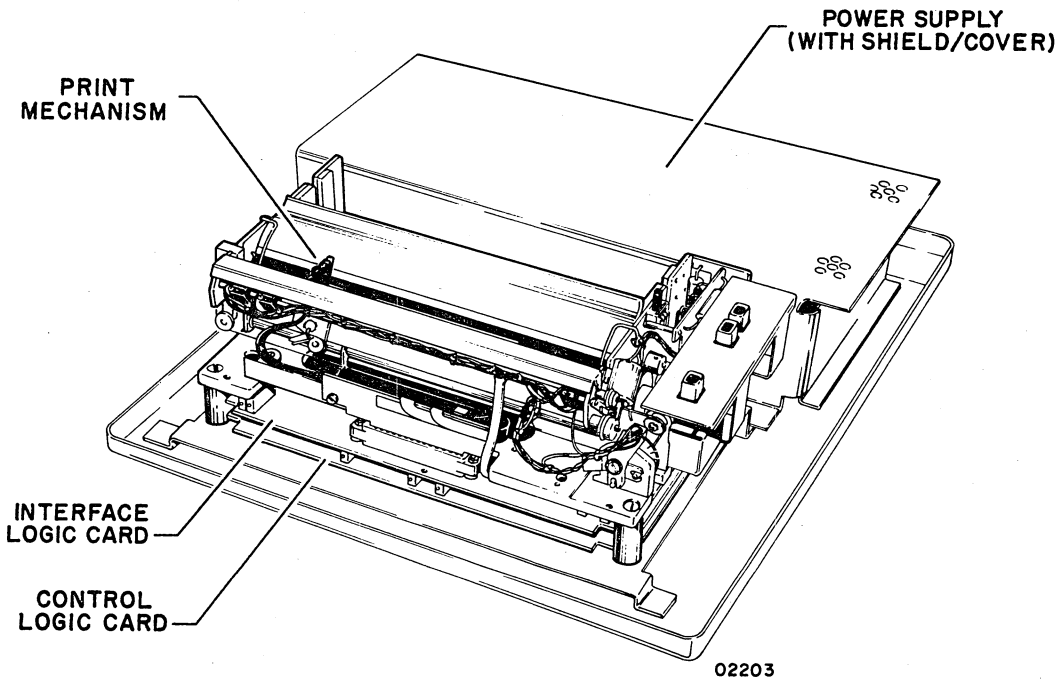

Figure 1-6. Nonimpact Printer Components

Print Mechanism

The print mechanism consists of the electromechanical elements necessary to print characters and to advance the roll-type heat-sensitive paper on which characters are printed. Printing is done by a single printhead that consists of a set of heater elements arranged in a 5- by 7-dot matrix. A character is printed by bringing the printhead into contact with the heat-sensitive paper and quickly heating the matrix elements necessary to reproduce the desired character. Multicopy records cannot be made on this type of printer. The printer is capable of reproducing the 95 (including space) uppercase and lowercase characters and symbols listed in appendix A of this manual. It responds to the following ASCII control codes: backspace, line feed, and carriage return.

Interface and Control Logic Cards

The interface and control logic cards contain circuits for interfacing the printer to the display terminal and for controlling printer operation. The interface card accepts serial outputs from the display terminal, assembles and decodes these outputs, and directs them to the appropriate circuits (data outputs to the printhead and control outputs to the control logic). The control card provides timing and control signals for all printer operations.

Power Supply

The nonimpact printer power supply is a single, removable assembly that provides four regulated dc voltages: +5 V dc for all logic circuits, +16 V dc for the print mechanism, +24 V dc for the print mechanism, and -24 V dc for the printer/terminal interface circuits. All outputs have overcurrent and overvoltage protection.

55-LINES PER MINUTE (LPM) IMPACT PRINTER

The 55-LPM impact printer, shown in figure 1-7, operates as a peripheral device for the display terminal in lieu of the nonimpact printer. It prints characters in serial order at speeds of up to 173 characters per second in a 60-Hz version or 180 characters per second in a 50-Hz version. It includes internal switches for selecting 150, 300, 600, or 1200 baud data reception rates and for selecting either odd or even parity checking of received codes. Although the impact printer has a print line capacity of 132 characters, the use of line feed and carriage return control codes can format a print line to match the display line format of 80 characters.

The printer cabinet contains a print mechanism, interface and control logic cards, and a power supply. Figure 1-8 shows the location of these components within the printer cabinet, and the following text briefly describes each component.

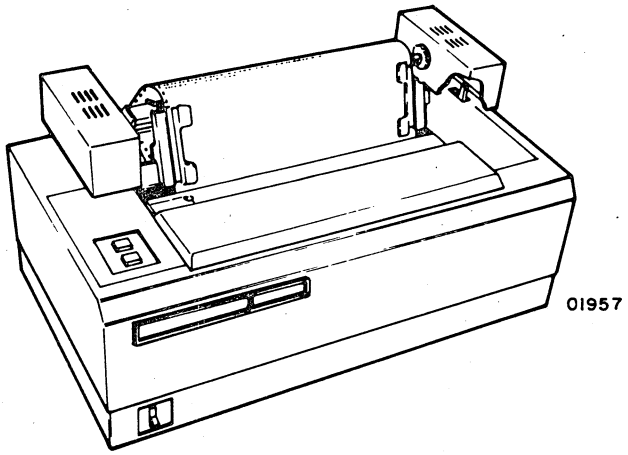

Figure 1-7. 55-LPM Impact Printer

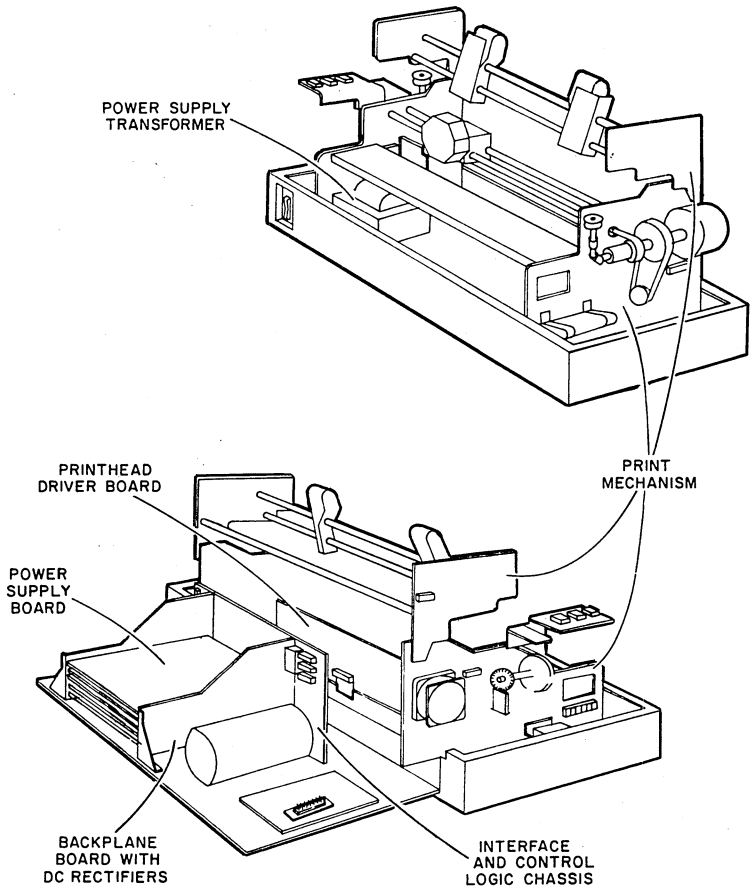

Figure 1-8. 55-LPM Impact Printer Components

Print Mechanism

The print mechanism consists of all electromechanical components necessary to print characters and to move the paper forms on which characters are printed. The mechanism uses standard, fan-folded, single or multicopy (up to five parts) paper forms. The printhead of the mechanism consists of a set of impact pin elements arranged in a vertical 1- by 7-dot matrix. This printhead prints one vertical column at a time within a 7- by 7-dot character matrix. Printing is accomplished by bringing the required pins into contact with an inked ribbon, which in turn transfers the dot pattern to a paper form. Electric solenoids actuate the particular pins for printing each portion of a desired character, which is determined by decoding the signals received via the terminal-to-printer interface. The printer is capable of reproducing the 95 (including space) uppercase and lowercase characters and symbols listed in the appendix of this manual, and it responds to the following ANSI control codes: carriage return, line feed, vertical tabulation, and form feed. Other device control codes cause the printhead to space a character position.

Interface and Control Logic Cards

With the exception of the printhead driver board, which is mounted on the print mechanism, the logic chassis contains all the interface and control logic cards. Each card is a separate module that is removable by releasing the holding cams at each end of the card and withdrawing it from the logic chassis. Replacement is done in a reverse manner, slide the cards into the proper position in the chassis and set it to its connector via the holding cam levers. Logic circuits on these cards perform terminal-to-printer interface, control and timing, character code decoding and print mechanism control functions for the printer.

Power Supply

The power supply in the printer consists of an ac input power transformer, a backplane rectifier board, and a dc regulator/power supply board. These components are physically separated from one another, as shown in figure 1-8. The transformer converts either 60-Hz or 50-Hz ac input power to the following voltages: 13, 16, 24, and 28 V ac. The backplane board contains rectifiers for producing +12- and +36-V dc power. The power supply board supplies regulated +5 V dc for the logic circuits, and it also contains a -12-V dc rectifier/regulator to produce power for use by the controller, character decoder, and interface circuits of the printer.

70-LINES PER MINUTE (LPM) IMPACT PRINTER

The 70-LPM printer (figure 1-9) is a single-head, bidirectional printer. It has a print rate of 70 lines per minute (50/60 Hz) and prints a full line of 132 (7- by 9-dot pattern) characters with a maximum short line print rate of 200 lines per minute. The standard character pitch is 10 characters per inch with an operator-selectable compressed pitch of 16.5 characters per inch. The printer has position seeking capability for increased speed throughout.

The printer cabinet contains the following major functional components:

- Print mechanism
- Interface and control logic chassis
- Power supply

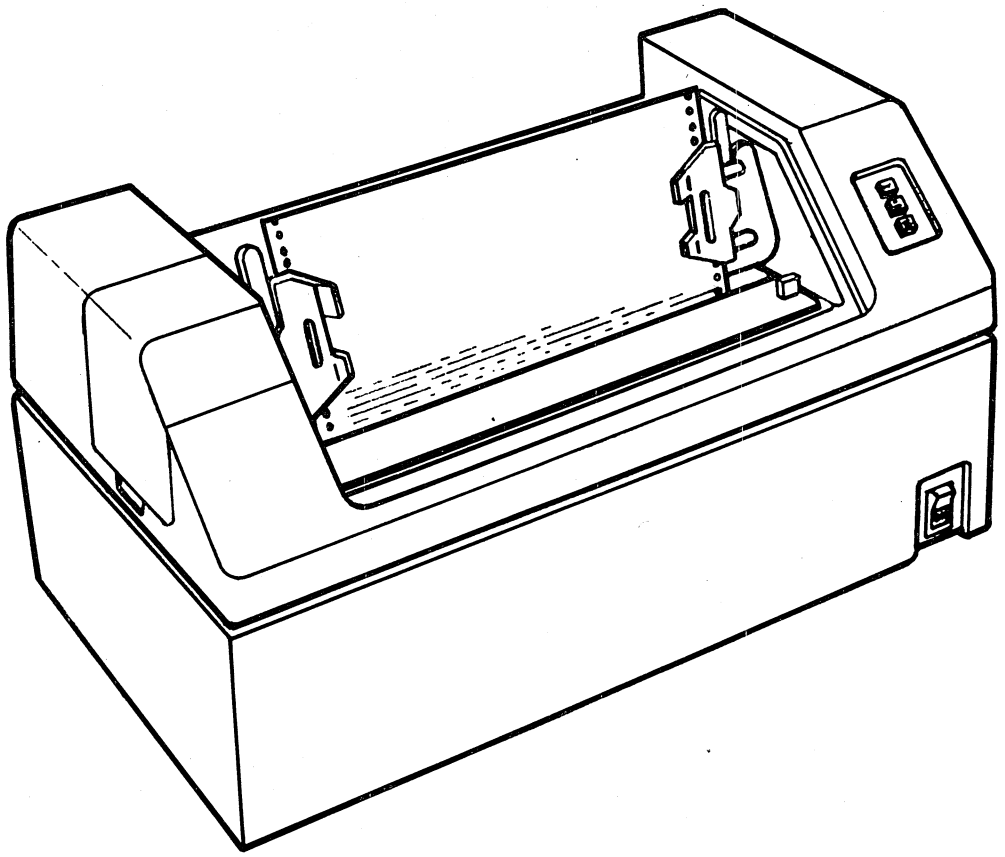

02860

Figure 1-9. 70-LPM Impact Printer

Print Mechanism

The printhead consists of an operator-replaceable printhead. It prints bidirectionally; that is, the printhead alternately prints a line in one direction and the following line in the opposite direction with the printhead moving just far enough to accomplish printing.

The printhead contains the print wires and solenoids necessary to perform a print operation. As the printhead moves horizontally across the print station, the solenoids activate the print wires creating a series of dot patterns within a programmed matrix. The pattern of these dots in the matrix forms the character.

Interface and Control Logic Chassis

The logic chassis is at the rear of the printer and houses all the printed-circuit cards with the exception of the needle driver board assembly, vertical transducer board assembly, horizontal transducer board assembly, and control panel assembly. All boards in the logic chassis swing down to a horizontal position for easy removal. To replace a board in the chassis, swing down each board as needed by releasing two latches on either side of the board. When the board is horizontal, remove it by removing four screws from the board frame.

Power Supply

Power to the printer enters as an input voltage to a transformer which steps down the voltage to four ac output voltages. The four voltage outputs are: +30 V ac, +55 V ac, and two separate +16 V ac. The four ac output voltages then enter the power supply board where they are converted into six dc voltages. The dc distribution is initiated on the power supply board.

The six dc voltages include the following: +36 V dc, -36 V dc, +5 V dc, -5 V dc, +12 V dc, and -12 V dc. The +36 V dc and the -36 V dc supply power to the vertical (paper motion) and horizontal (printhead transport) servo-linear power amplifiers, which supply power to the drivehead transport and paper motion servo motors; +36 V dc also provides power to the needle driver coils.

The +12 V dc and -12 V dc power the servo-linear control circuits. The +5 V dc and -5 V dc power the controller circuits. The +5 V dc also supplies power to the servo-digital control circuits.

FEATURES SUMMARY

Following is a summary listing of display terminal features; some features listed have been described earlier in this section and some are given here for the first time.

- Self-contained display unit with interface for connecting removable keyboard module.
- 12-inch crt screen using an approximate 7.8-in by 5-in (198-m by 127-m) raster area.
- Nonglare crt screen.
- 24 display lines of 80 characters per line.
- Character refresh memory capable of holding all character codes recognizable by the terminal.
- Display character refresh rate of either 50 or 60 Hz (power line input frequency) for flicker-free viewing.
- Blinking cursor to mark position of next character entry.
- Highlight feature, permitting operator to display selected data fields either at reduced intensity or blinking.
- Capability of positioning cursor anywhere on display area via keyboard inputs.
- Audible notification at 73rd character position that end of line is approaching.
- Capability of recognizing and generating 128 discrete codes: 95 alphanumeric codes and 33 control codes.
- Alphanumeric and control character codes that correspond with those recommended by ANSI.
- Modular keyboard assembly interconnected to display unit via single interface cable.
- 80-key keyboard with 67-key main cluster and 13-key numeric entry cluster.
- 82-Key Typewriter Keyboard with a 68-key main cluster and 14 key numeric entry cluster.
- Cursor controls: up, down, left, right, and home .
- Typamatic Keys — When the key is pressed and held, the repeat feature is activated without having to press the Repeat Key (82-key keyboard only).
- Nonglare keycaps on all keyboard keys.

- Keyboard access to all 33 ANSI control codes.
- Keyboard carries all controls and indicators normally used by the operator during display terminal operation.
- 3-character buffer for keyed-in data to prevent typing-burst errors.
- Operator selection of the following via the keyboard:
  - Online or local mode (offline) operation of the display terminal.
  - Choice of routing keyed-in data to the communication channel only, to the display and printer only, or to the display, printer, and communication channel.
  - Choice of any two of the following communication line baud rates in addition to a preset 300 baud rate: 110, 150, 200, 600, 1200, 1800, 2400, 4800, or 9600.
  - Odd, even, or no word parity.
  - Page or scroll mode operation of displayed data entered via the keyboard.
  - Use of either 96- or 64-character, alphanumeric, ANSI code sets for keyed-in data.
- Keyboard control of display functions including cursor positioning, reset cursor, clear screen, line clear, or highlight.
- Display terminal available with either voltage level communication facility interface or with current loop interface.
- 50-Hz terminals with FTZ-approved shielding.
- Rear panel connector for attaching either nonimpact printer for quiet terminal operation or impact printers for producing up to 5-part multi-copy forms.
- Rear panel tests for facilitating display terminal test and checkout procedures.

EQUIPMENT CHARACTERISTICS

The following paragraphs describe the environmental, electrical, and physical characteristics for the display terminal, the nonimpact printer, and the impact printers.

ENVIRONMENTAL REQUIREMENTS

All of the display terminal equipments have the following environmental requirements.

- Operating

  Temperature: 50°F to 104°F (10°C to +40°C)
  Temperature Change: 18°F/h (10°C/h)
  Relative Humidity: 20 to 80% - no condensation
  Humidity Change: 10%/h
  Altitude from Sea Level: -980 to +9850 ft (-300 to +3000 m)

- Nonoperating

  Temperature: -14°F to +122°F (-10°C to +50°C)
  Temperature Change: 27°F/h (15°C/h)
  Relative Humidity: 10 to 90% - no condensation
  Humidity Change: 10%/h
  Altitude from Sea Level: -980 to +9850 ft (-300 to +3000 m)

DISPLAY TERMINAL–ELECTRICAL

The display terminal has the following electrical power requirements.

- 120 V ac, 60 Hz, at 1.0 A, nominal
- 220/240 V ac, 50 Hz, at 0.55 A, nominal

The display terminal requires 90 W of power. Heat dissiplation is approximately 332 Btu/h.

NONIMPACT PRINTER–ELECTRICAL

The nonimpact printer has the following electrical power requirements.

104 to 127 V ac single-phase, 59.0 to 60.6 Hz, 2.0 A

or

198 to 242 V ac single-phase, 49.0 to 50.5 Hz, 1.3 A
216 to 264 V ac single-phase, 49.0 to 50.5 Hz, 1.3 A

The nonimpact printer requires 100 W of power. Heat dissipation is approximately 341 Btu/H.

55-LPM IMPACT PRINTER – ELECTRICAL

The 55-LPM impact printer has the following electrical power requirements.

104 to 127 V ac single-phase, 59.0 to 60.6 Hz, 4.2 A

or

198 to 268 V ac single-phase, 49.0 to 50.5 Hz, 2.1 A

Power use of this printer is 250 W and heat dissipation is 854 Btu/h.

70-LPM IMPACT CHARACTER PRINTER – ELECTRICAL

The 70-LPM impact character printer has the following electrical power requirements:

59 to 60.6 Hz, single-phase, 2.8 A

49 to 50.5 Hz, single-phase, 1.5 A

with tap selectable ranges:

Nominal V ac	Voltage Range (V ac)
100	90 to 107
120	104 to 127
200	180 to 213
220	198 to 235
230	207 to 246
240	216 to 257
260	234 to 278

Power use of the printer is 243 W operating and heat dissipation is 829 Btu/h.

DISPLAY TERMINAL – PHYSICAL

The display terminal has the following dimensions and mass with the keyboard attached, see figure 1-10.

Height: 15.2 in (386.1 mm)
Width: 21.7 in (551.2 mm)
Depth: 20.5 in (520.7 mm)
Mass: 51 lb (23.1 kg)

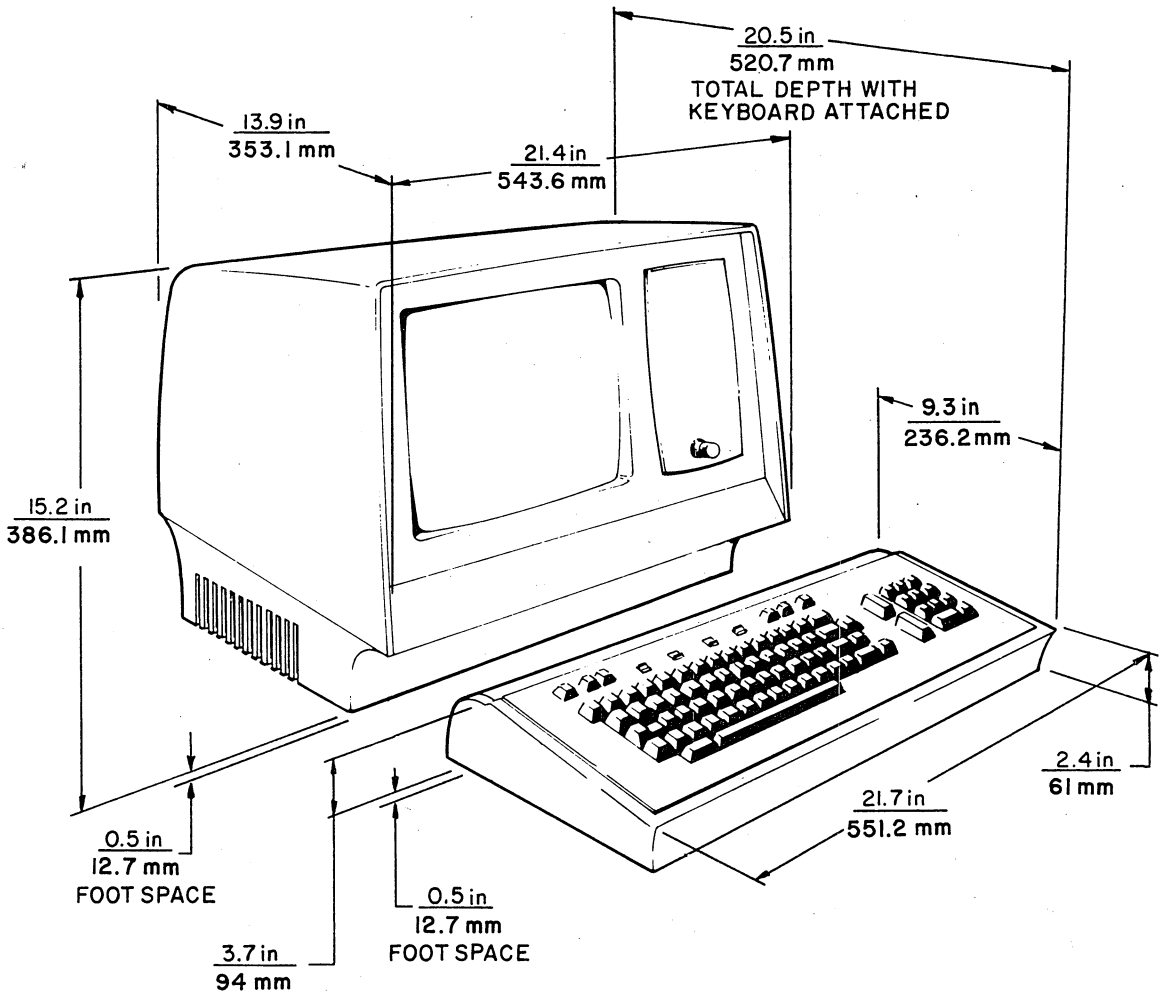

Figure 1-10. Display Terminal Dimensions

NONIMPACT PRINTER—PHYSICAL

The nonimpact printer has the following dimensions and mass, see figure 1-11.

Height: 5.9 in (149.9 mm)
Width: 17.6 in (447.1 mm)
Depth: 15.9 in (403.9 mm)
Mass: 30 lb (13.6 kg) approximately

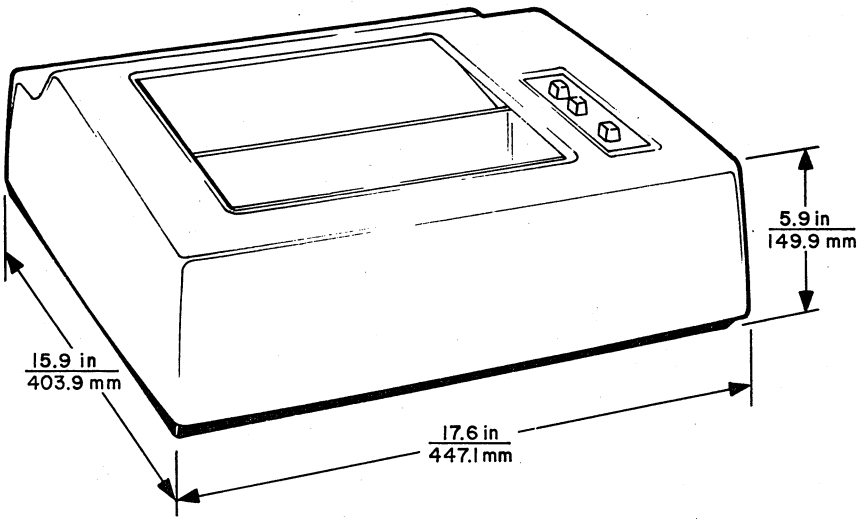

Figure 1-11. Nonimpact Printer Dimensions

55-LPM IMPACT PRINTER – PHYSICAL

The 55-LPM impact printer has the following dimensions and mass, see figure 1-12.

Height: 14.8 in (375.9 mm)
Width: 27.6 in (701 mm)
Depth: 15 in (381 mm)
Mass: 77 lb (35 kg) approximately

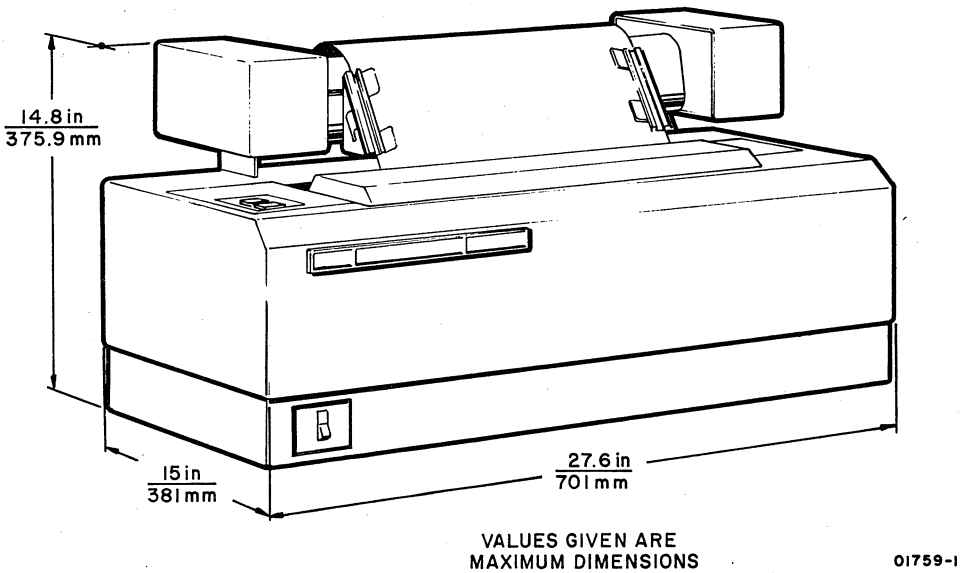

Figure 1-12. 55-LPM Impact Printer Dimensions

70-LPM IMPACT PRINTER – PHYSICAL

The 70-LPM printer (figure 1-13) has the following dimensions and mass.

Height: 13.5 in (342.90 mm)
Width: 28.75 in (730.25 mm)
Depth: 17.3 in (439.42 mm)
Weight: 98 lb (44.5 kg)

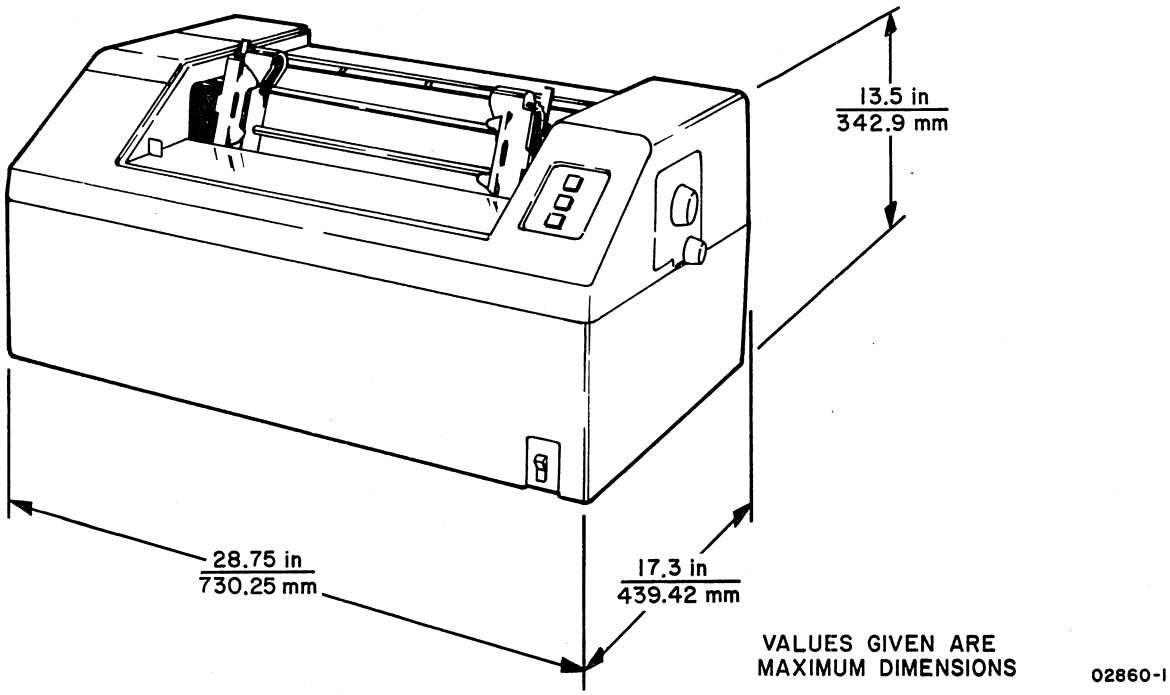

Figure 1-13. 70-LPM Impact Printer Dimensions

OPERATION 2

This section title page is included to maintain format continuity and compatibility with other manuals of this type. See the Operators Guide/Reference Manual referred to in the preface of this manual for information on operating the terminal.

INSTALLATION AND CHECKOUT 3

This section title page is included to maintain format continuity and compatibility with other manuals of this type. The appendix of the associated Operators Guide/ Reference Manual (see preface) contains installation information for this terminal, and section 6, Maintenance, of this manual contains checkout information for the terminal.

THEORY OF OPERATION 4

The schematic, logic and timing diagrams in section 5 of this manual provide sufficient information for a technician with proper test equipment to identify and correct problems arising from individual circuit or component malfunctions. Section 4 describes the functional theory of the modular assemblies comprising the keyboard display terminal. Additionally, it provides an overview of each assembly comprising the terminal to assist in diagnosing a malfunction to a particular component or part.

The display terminal consists of five functional assemblies: 1) keyboard assembly, 2) video display assembly, 3) logic module assembly, 4) rear panel assembly, and 5) power supply assembly. Figure 4-1 is a functional block diagram of the display terminal. In addition to describing the functional theory of the five principal assemblies of the display terminal, this section also provides descriptions for miscellaneous components that are field-replaceable and a description of the nonimpact printer. The functional theory of the impact printer is described in the reference and field-service manual for the impact printer (see preface for publication number and ordering information).

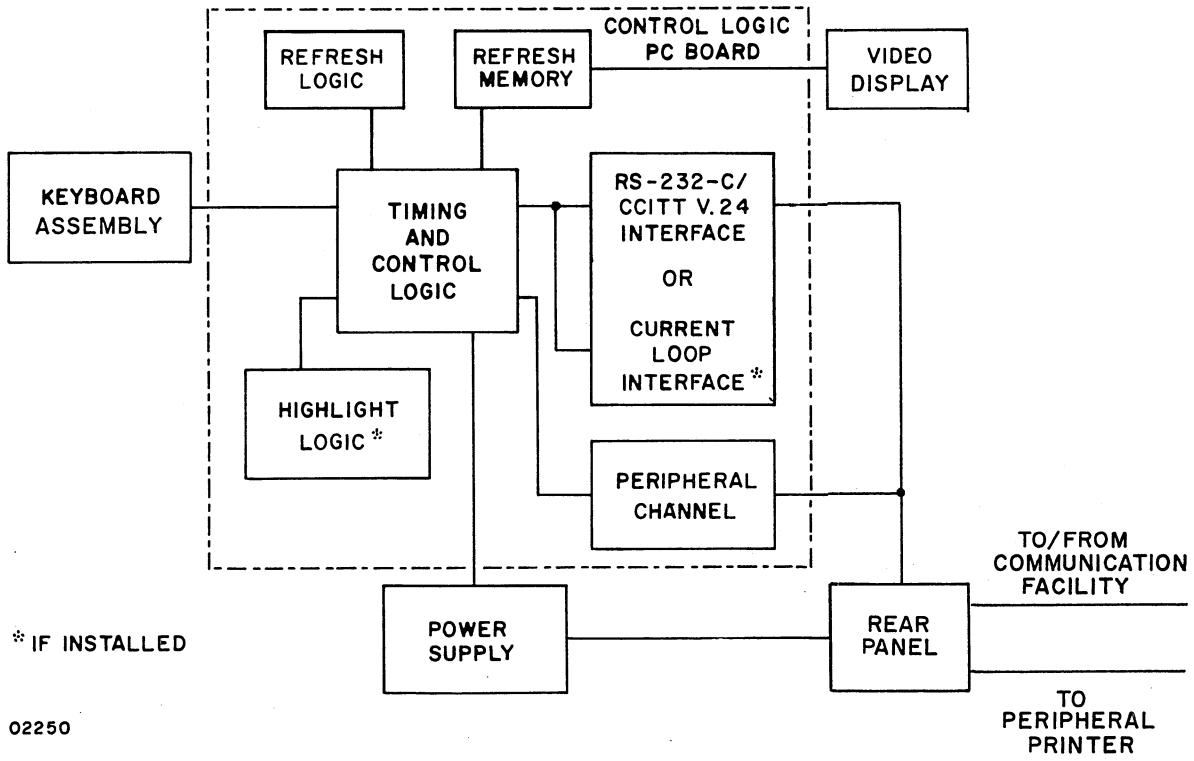

Figure 4-1. Functional Block Diagram of Display Terminal

KEYBOARD ASSEMBLY

Figure 4-2 shows the component parts of the keyboard module. As noted previously, the keyboard provides the terminal operator/display terminal interface, and consequently, the interface to the system of which the terminal is a part. Via the keyboard, the operator controls the operating modes and parameters of the terminal and keys in data for transmission to the central processing unit (CPU).

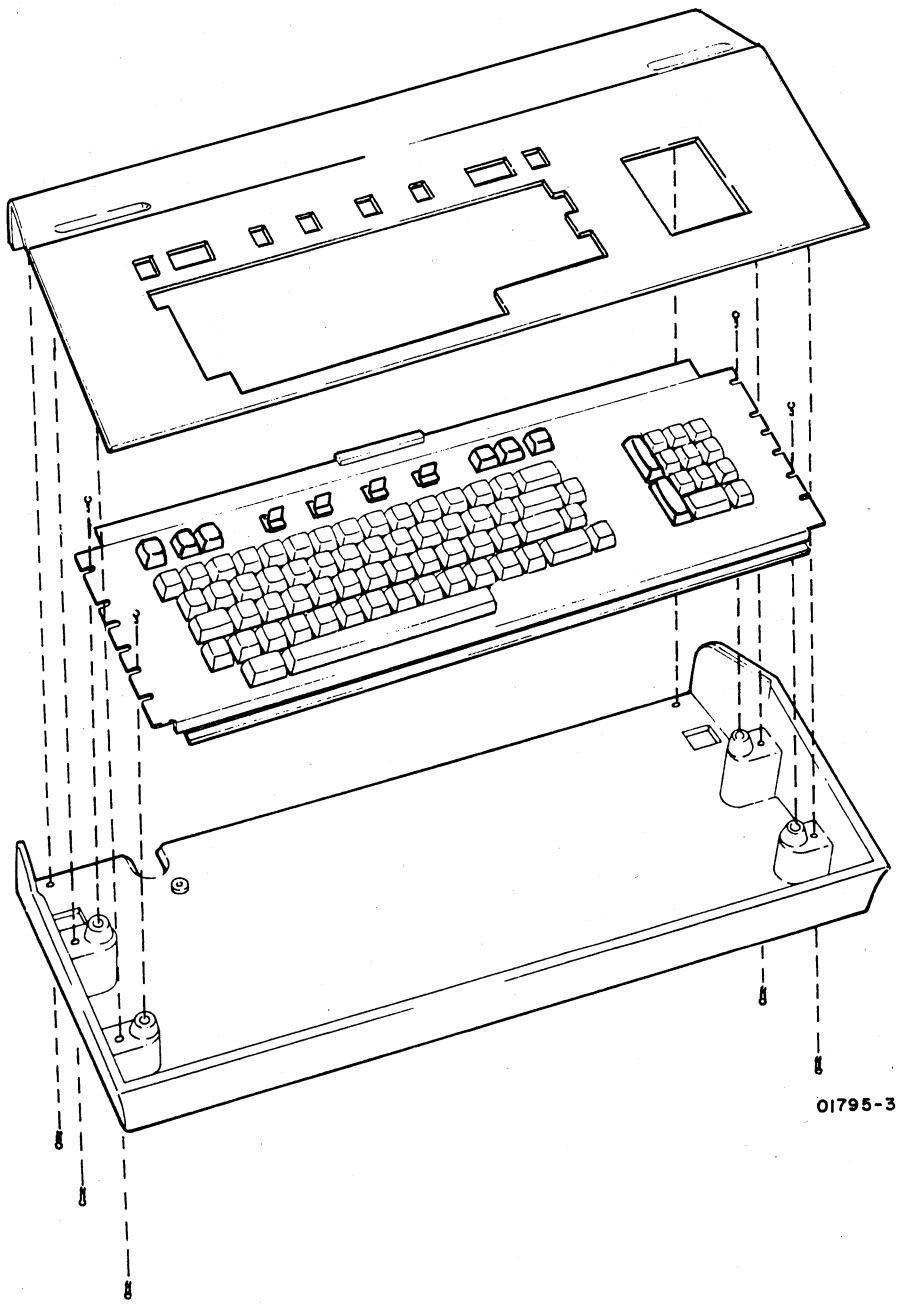

Figure 4-2. Keyboard Module

With the exception of the SHIFT, SHIFT LOCK, CONTROL, REPEAT and BREAK keys, pressing any key on the keyboard enables a seven-bit code to pass to the keyboard interface.* This code then transfers to the control-logic PC board where it is identified and acted upon accordingly (for example, transmit and display, transmit only, control). All code-encoding keys on the keyboard feature N-key rollover, which means that pressing a key enables the transfer of its code to the keyboard interface, regardless of the state of other keys on the keyboard. For example, even if two keys are pressed and held down, pressing a third key will pass the code associated with the third key to the interface.

The SHIFT, SHIFT LOCK, and CONTROL keys do not generate a code, they modify key codes. The SHIFT and the SHIFT LOCK keys modify key codes in the same manner by permitting access to the second (or uppercase) level of keyboard codes. The CONTROL key allows access to the third (or control level) of keyboard codes. Figures and tables in the appendix of this manual list the codes and symbols associated with each key. Pressing the REPEAT key and holding it down while a data key is pressed and held, permits the code associated with the data key to repeat approximately 15 times per second until the REPEAT key is released. The BREAK key, while not a code-generating key, does pass a signal to the keyboard interface. Pressing the BREAK key causes the Break signal line to remain high (logical 1) for as long as the key is held down.

Table 4-1 shows the keyboard interface signal line assignments. A high level (logical 1) signal on the interface is defined as being between +2.4 and +5.25 V dc. A low level (logical 0) signal on the interface is defined as being between -0.5 and +0.4 V dc. All signals from the keyboard interface, except those coming in from the keyboard toggle switches, are electronically buffered and are not subject to switch-contact bounce. All keyboard power comes from the power supply assembly via the keyboard/display interface cable. The voltages supplied are +5.0 ± 0.25 V dc and -12 ± 0.60 V dc. The following paragraphs describe the on/off states of the interface signal lines.

The CO signal line carries a Carrier On signal from the terminal communication channel interface to the keyboard CO indicator. When this line is low, the indicator lights; when high, the indicator is extinguished.

The Page signal goes high when the PAGE key on the keyboard is pressed. This enables the page mode operation of the display screen. When this signal is low (PAGE key up), scroll mode operation of the display screen is enabled.

---

* The 96/64 and PAGE keys are actually switches and the CO key is actually an indicator.

TABLE 4-1. KEYBOARD INTERFACE SIGNAL LINES

PIN	SIGNAL	PIN	SIGNAL
1	CO	14	High Rate
2	Page	15	Low Rate
3	Data 2^6	16	Odd Parity
4	Data 2^5	17	Even Parity
5	Data 2^4	18	Signal Ground
6	Data 2^3	19	Open
7	Data 2^2	20	Frame Ground
8	Data 2^1	21	Open
9	Data 2^0	22	Open
10	Data Ready	23	+5 V dc
11	Online/Local	24	Signal Ground
12	Full/Half Duplex	25	-12 V dc
13	Break	Shell	Frame Ground

A high level on a Data 2^x signal line equals a set bit, while a low level on a Data 2^x signal line equals the absence of a bit, or logical 0.

The Data Ready signal line switches from a normally high-level condition to a low-level condition for between 8 to 20 microseconds to inform the display logic that new data is on the Data 2^x signal lines and is ready to be read.

The Online/Local signal line goes high when the ON LINE/LOCAL keyboard switch is in the ON LINE position; it goes low when the switch is in the LOCAL position.

The Full Duplex/Half Duplex signal line goes high when the FULL DUP/HALF DUP keyboard switch is in the FULL DUP position; it goes low when the switch is in the HALF DUP position.

The Break signal line goes high when the BREAK keyboard key is pressed and it remains high until the key is released, at which time it goes low.

The High Rate signal line goes low when the HIGH RATE/300/LOW RATE keyboard switch is in the HIGH RATE position; it goes high when the switch is in either the 300 or the LOW RATE position.

The Low Rate signal goes low when the HIGH RATE/300/LOW RATE keyboard switch is in the LOW RATE position; it goes high when the switch is in either the 300 or the HIGH RATE position.

The Odd Parity signal line goes low when the ODD PAR/NO/EVEN PAR keyboard switch is in the ODD PAR position; it goes high when the switch is in either the NO or the EVEN PAR position.

The Even Parity signal line goes low when the ODD PAR/NO/EVEN PAR keyboard switch is in the EVEN PAR position; it goes high when the switch is in either the NO or the ODD PAR position.

VIDEO DISPLAY ASSEMBLY

The video display assembly (monitor) enables monitoring of electronically encoded information. The monitor receives fixed-rate horizontal and vertical sync inputs from the control logic counters, and the video (blank and unblank) signals are not modulated onto the sync pulses. The video signal inputs to the monitor come from the symbol generator and read/write memory (refresh memory) circuits on the logic module PC board. This method of separating the video and sync signals to the monitor nearly eliminates vertical roll and horizontal tearing of displayed images.

The monitor receives only an unregulated +23-V dc input from the power supply module. From this voltage input, the monitor produces all of the other voltages, including the 12-kV anode voltage necessary for operation of the crt. The principal subassemblies of the video display assembly are shown in figure 4-3. These subassemblies are the crt, the vertical choke, the monitor PC board, the +15-V regulator assembly, the crt yoke assembly and crt cap, and the high-voltage transformer. Following are brief descriptions of each of these subassemblies.

CATHODE-RAY TUBE (CRT)

The crt is a standard 12-inch display tube which uses a P4 white phosphor screen and a bonded, nonglare faceplate. The crt is a replaceable item and procedures for removing and replacing it are included in section 6.

VERTICAL CHOKE

The vertical choke is connected in series with the vertical yoke coil; it suppresses oscillations in the vertical output circuit to provide a linear vertical sweep motion of the crt electron beam. Procedures for replacing the vertical choke are included in section 6.

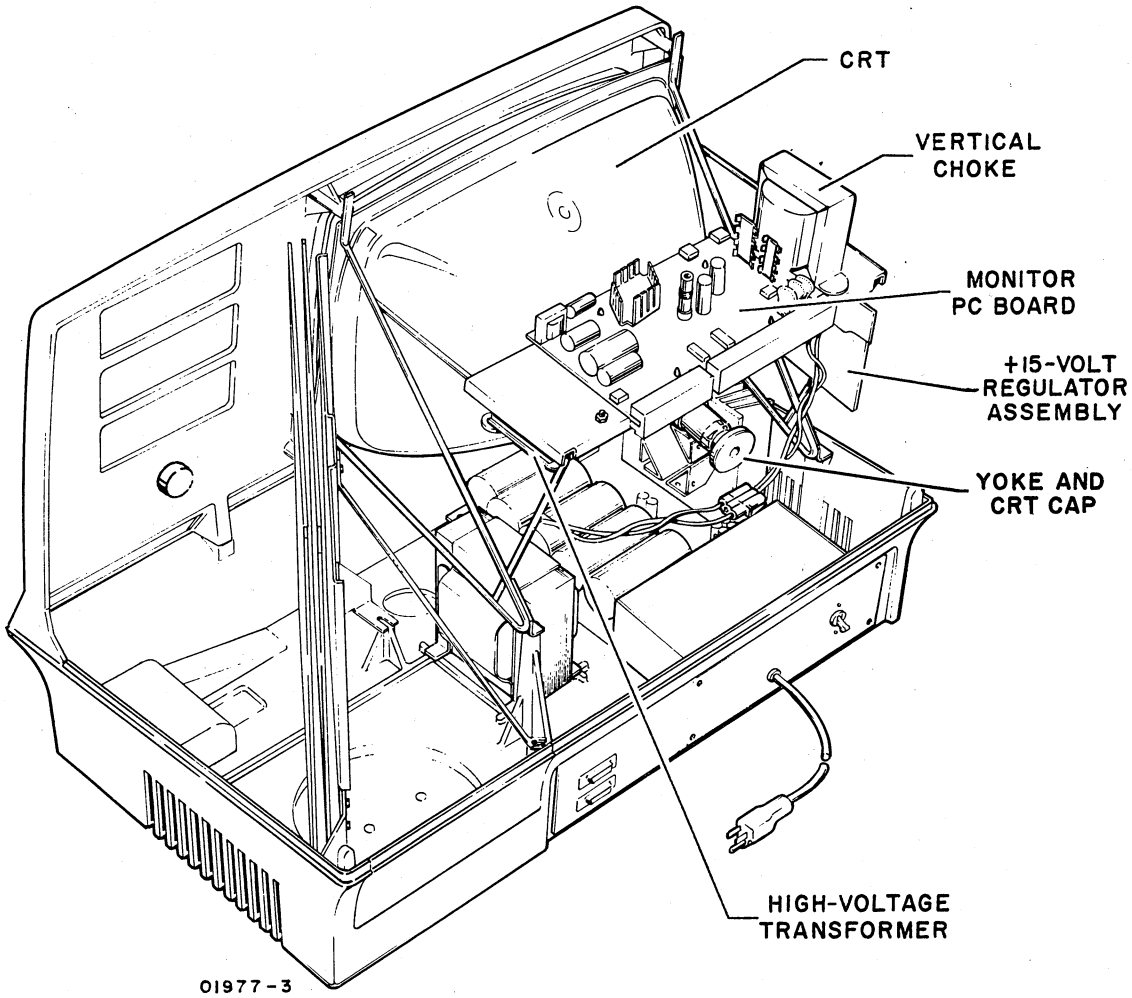

Figure 4-3. Location of Video Display Subassemblies

MONITOR PC BOARD

The monitor PC board contains the horizontal and vertical sync and amplifier circuits for controlling the sweep of the electron beam across and up and down the crt screen. It also carries the video amplifier circuits that control blanking and unblanking of the beam. The sync circuits incorporate a feature that shuts off the high voltage (12 kV) upon loss of either the horizontal or vertical sync pulses. Adjustment procedures for vertical height and linearity, and for contrast and focus controls mounted on the monitor PC board are included in section 6 of this manual, as are procedures for removing and replacing the PC board. A schematic of this PC board is included in section 5. The PC board also has a +5-V dc regulator circuit on it for producing a regulated +5 V dc from the +15-V dc output of the +15-V regulator assembly.

+15-V DC REGULATOR ASSEMBLY

The +15-V dc regulator assembly is the large heat sink and regulator circuits mounted on the left rear side of the display unit. The regulator circuit consists of a +15-V dc regulator and a pass transistor, each mounted in a round metal package (TO-3 type). Figure 4-4 shows the mounting location of the regulator assembly on the video monitor chassis and the location of the pass transistor and regulator circuit on the heat sink.

The regulator assembly accepts an unregulated +23-V dc input from the power supply module and converts it to a regulated +15-V dc output for use by the monitor PC board. The +15-V output splits to furnish power to two locations on the monitor PC board. One output furnishes +15 V to circuits using this power level directly, while the second supplies a +5-V dc regulator circuit to produce a regulated +5-V dc output. Refer to the Noncomposite Video Display Electronics Schematic Diagram and the +15-V Regulator Assembly Schematic Diagram in section 5 of this manual for circuit details. Section 6 of this manual contains the procedures for checking the regulator assembly and for replacing it if necessary.

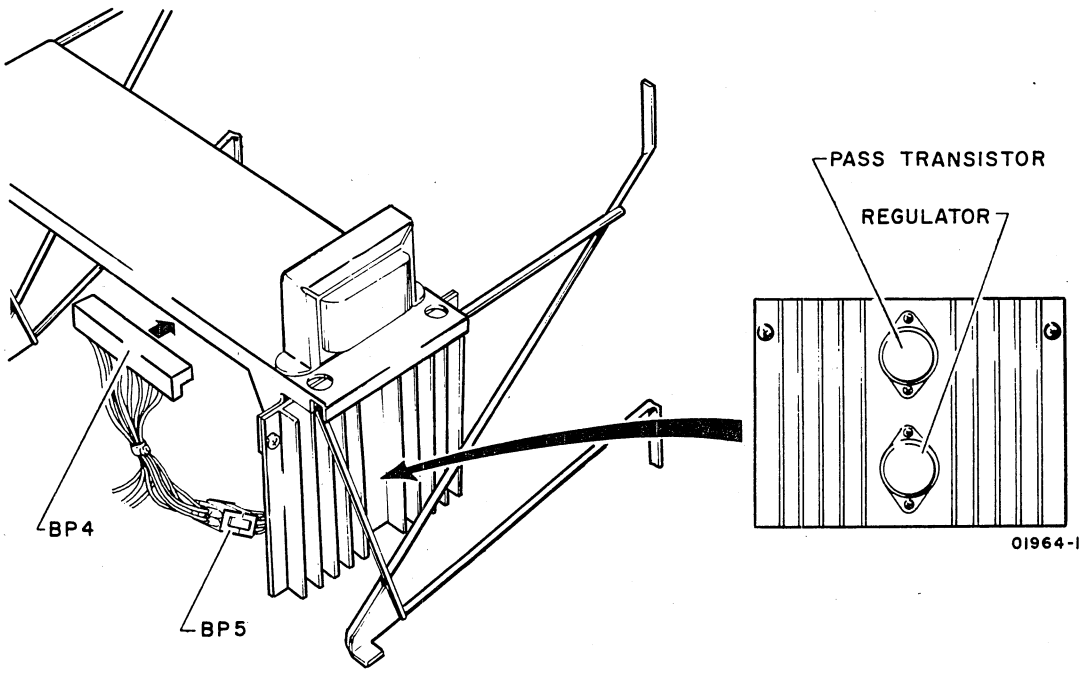

Figure 4-4. +15-V dc Regulator Assembly

CRT YOKE AND CRT CAP

The crt yoke provides horizontal and vertical deflection of the crt electron beam so that the beam sweeps the screen properly. This is accomplished by applying the horizontal and vertical amplifier outputs to the horizontal and vertical deflection coils in the yoke assembly. The yoke assembly is not expected to fail unless physically damaged but since that possibility does exist, replacement and adjustment procedures for the yoke assembly are included in section 6. The yoke also has some small permanent magnets affixed to it. These magnets are used to minimize geometric distortion of the video display. Section 6 also contains procedures for installing these magnets on a new yoke assembly to minimize the effects of geometric distortion.

HIGH-VOLTAGE TRANSFORMER

The high-voltage transformer produces all high dc voltages (-190, +45, +465, and +12 kV dc) used within the video display assembly by boosting the output of the horizontal amplifier. The secondary of the transformer is tapped at various points so that outputs can be rectified and used in the high voltage portions of the monitor PC board electronics.

WARNING

Never touch or attempt to replace the high voltage transformer while power is applied to the terminal.

LOGIC MODULE ASSEMBLY

The logic module assembly is the heart of the display terminal in that it carries the bulk of the electronic circuits for the terminal. Figure 4-5 shows the location of the PC board within the terminal and figure 4-6 is a detailed block diagram of the circuits mounted on the PC board. The following text describes the general functions of the circuits on the logic PC board. Logic and timing diagrams for these circuits are included in section 5.

The function of the phase-lock loop circuit is to lock vertical sync timing for the video display to the frequency of the ac input power. The circuit accomplishes this by comparing the output of the vertical sync circuit with the frequency of the ac input power, and then adjusting the output of a 14.5962-MHz oscillator slightly upward or downward, as necessary, to maintain optimal synchronization.

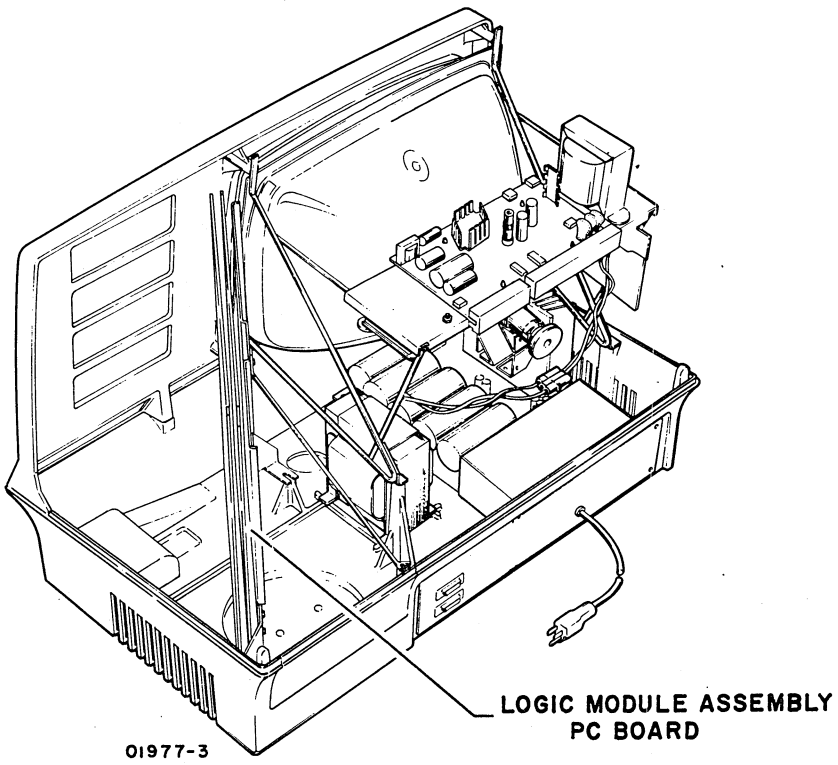

Figure 4-5. Location of Logic Module Assembly PC Board in Display Terminal

The output of the 14.5962-MHz oscillator is a 68.51-ns clock pulse (center frequency), which corresponds to one display dot time. Each character space consists of nine horizontal dot times; seven are displayable and two are used for spacing between characters. Because a display line can consist of 80 characters, there are 9 x 80 (720) dot times per horizontal display line (49.33 µs) During this 49.33 µs time period, the electron beam of the crt moves from the left side of the screen to the right side. To begin a new dot line, the beam must move back to the left side of the screen. This movement of the beam takes 198 dot times, or 13.56 µs since nothing has to display during this horizontal retrace time. One complete cycle of the beam from left to right and back is called a scan line and this scan line takes 49.33 µs plus 13.56 µs, or 62.89 µs to complete.

Vertically, a character has ten dot positions, nine are displayable and one is used for spacing between horizontal scan lines and for cursor display. This means that it requires 240 scan lines to complete a page of 24 character lines. This, in turn, takes 15.09 ms, or 240 scan lines times 62.89 µs per scan line. To complete an entire display frame cycle, the electron beam of the crt must move from its final display position at the bottom of the display screen up to the upper left corner of the screen. The time allotted for this movement of the beam to occur in a 60-Hz

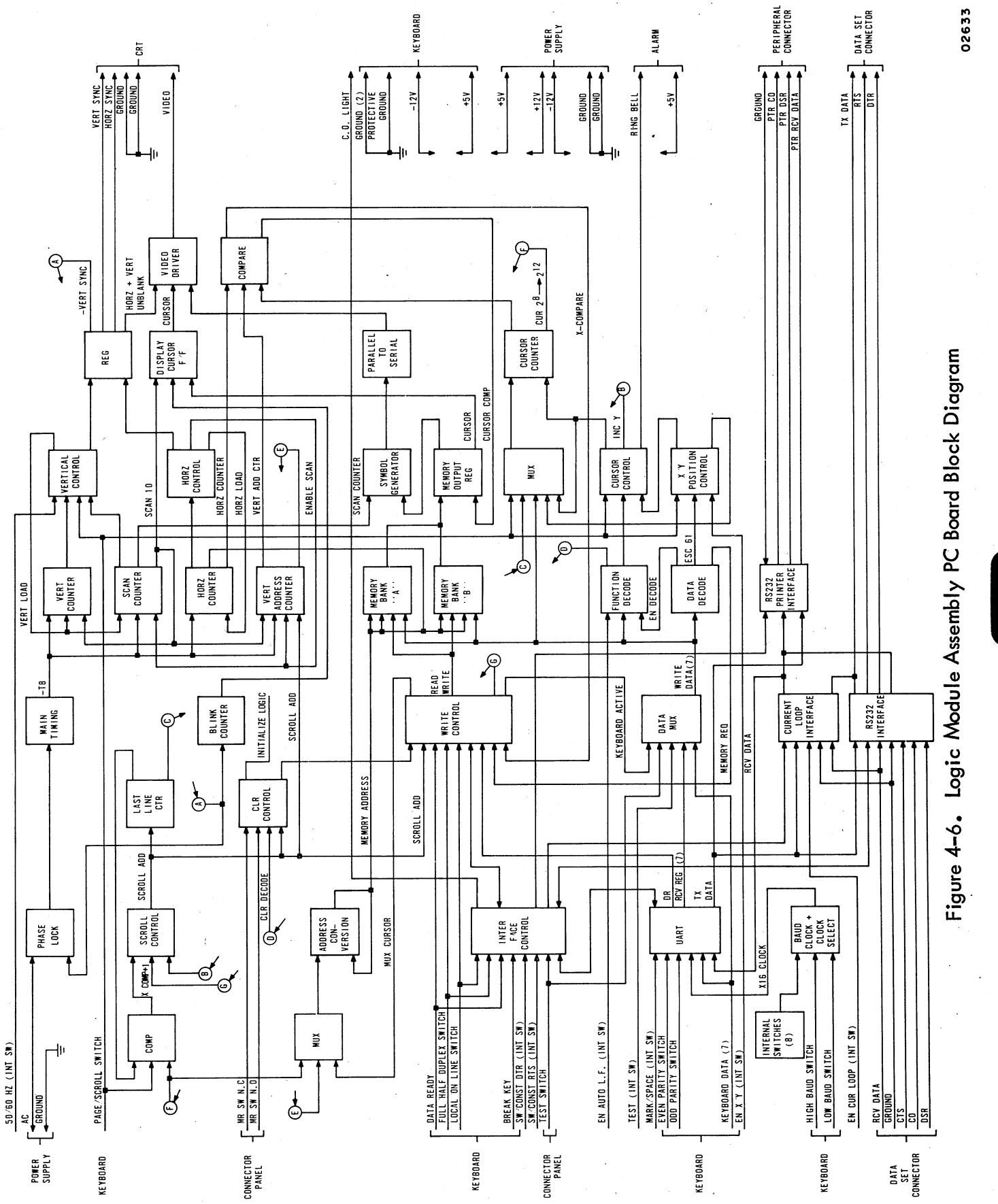

Figure 4-6. Logic Module Assembly PC Board Block Diagram

02633

terminal is 1.57 ms. Total cycle time for one complete display frame on a 60-Hz terminal is, therefore, 15.09 ms plus 1.57 ms, or 16.66 ms. Timing for 50-Hz terminals is essentially the same, except that time allotted for moving the beam of the crt from its final display position up to the upper left corner of the screen is 4.91 ms. This means that a 50-Hz terminal has a display frame time of 20 ms, rather than the 16.66-ms frame time of the 60-Hz terminal.

During the time that the electron beam is scanning a display screen, its position must be tracked so that it can be determined what the beam is supposed to be doing at any given dot position on the screen. The circuits shown in figure 4-6 track the motion of the beam via the horizontal and vertical scan counters, and control the presentation of character information on the screen by presenting the crt with video blank and unblank signals at the appropriate dot positions.

Other circuits shown in figure 4-6 are used to control where, when, and how video information is displayed on the crt screen. Since display information may originate from either the keyboard or the communication channel, control circuits are provided to multiplex display information into the refresh memory. Information from the memory must be converted into video blank and unblank signals for each dot position on the screen, and cursor-positioning control inputs from either the keyboard or the communication channel must be monitored and acted upon to move the cursor to any desired character position on the screen. All keyboard and internal control switch positions are monitored by the control logic so that the display reacts in accordance with the selected operating parameters of the terminal.

In addition, the logic module PC board has UART (universal asynchronous receiver/transmitter) circuitry to assemble serial communication channel data into parallel words for use within the terminal, and to serialize keyboard data from the terminal for transmission on the communication channel. Circuits are also provided for either a current loop or an RS-232-C communication channel interface and for an RS-232-C peripheral printer interface. Refer to Miscellaneous Terminal Components heading for information regarding the logic module/modem interface adapters, which allow the modem interface to be interconnected with RS-232-C/CCITT V.24 compatible devices, that are available.

REAR PANEL ASSEMBLY

Figure 4-7 indicates the location of the rear panel assembly on the display terminal and shows the external layout. The panel mounts the peripheral printer and communication facility interface connectors, the TEST/NORMAL switch, and the ac entry panel housing. The ac entry panel housing is the entry point for ac power to the terminal, and it contains circuit breaker CB1 and a radio frequency interference (RFI) filter. On 50-Hz, 220-/240-V ac terminals, connector CP2 (coming out of the ac entry panel housing internally), is the connector having the LOW and NORMAL wire connectors for matching the ac input power (nominal 220 V or 240 V) to the power requirements of the display terminal (see AC/DC Power Interconnect Diagram in section 5 for details).

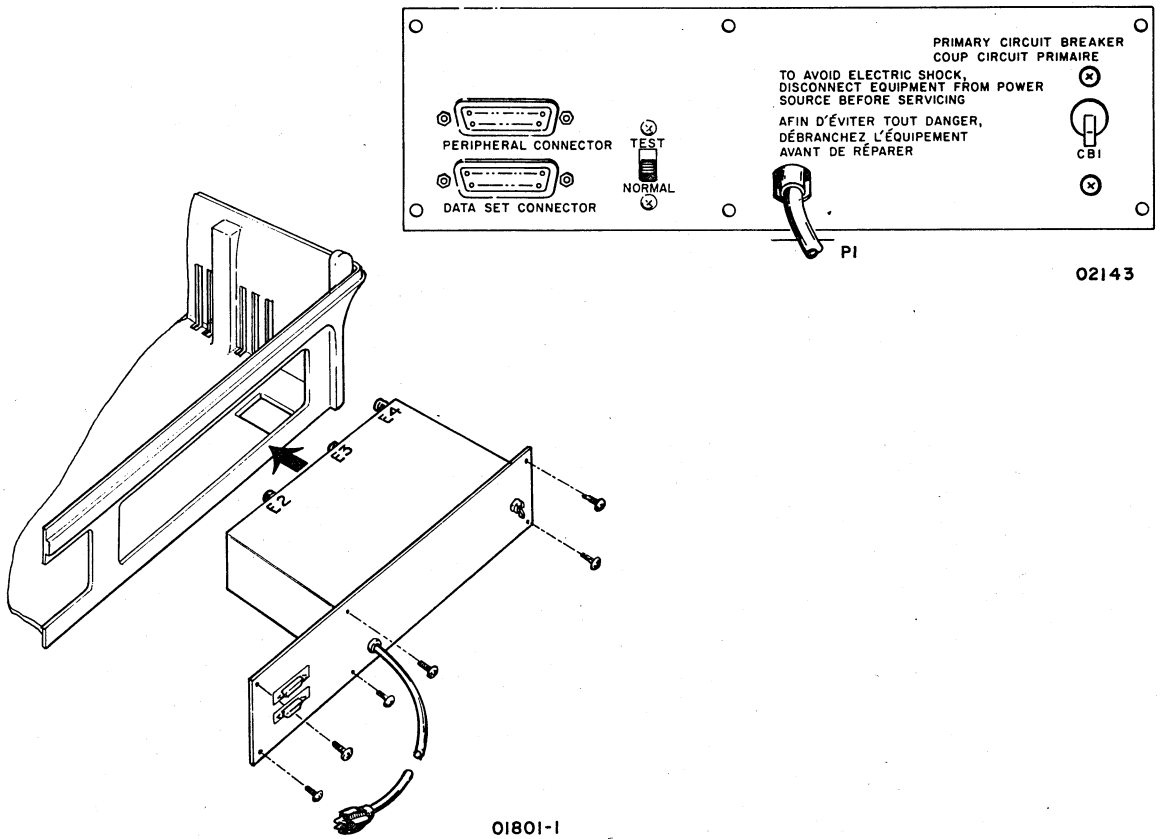

Figure 4-7. Terminal Rear Panel Location and Layout

Circuit breaker CB1 and the RFI filter are the only field replaceable components on the rear panel assembly. Procedures for replacing these two items are included in section 6 of this manual.

POWER SUPPLY ASSEMBLY

Figure 4-8 shows the top and front views (relative to front of display) of the power supply and figure 4-9 shows its mounting location within the display unit. The power supply receives its ac input power via CP2 and distributes dc voltages to the keyboard, video assembly, and logic module assembly via HJ2. Output voltages from HJ2 are as follows:

HJ2 Pin No.	Output
1	19 V ac at 0.1 A, maximum
2	Not used
3	+23 V dc at 1.5 A, maximum
4 through 6	Ground

7	+12 V dc at 0.2 A, maximum
8 and 9	Ground
10	-12 V dc at 0.2 A, maximum
11 and 12	+5 V at 6.0 A combined, maximum

An ac input circuit breaker, CB1, is located on the rear panel of the display terminal and is rated at 3.0 A for 115-V ac terminals or 2.0A for 220/240-V ac terminals.

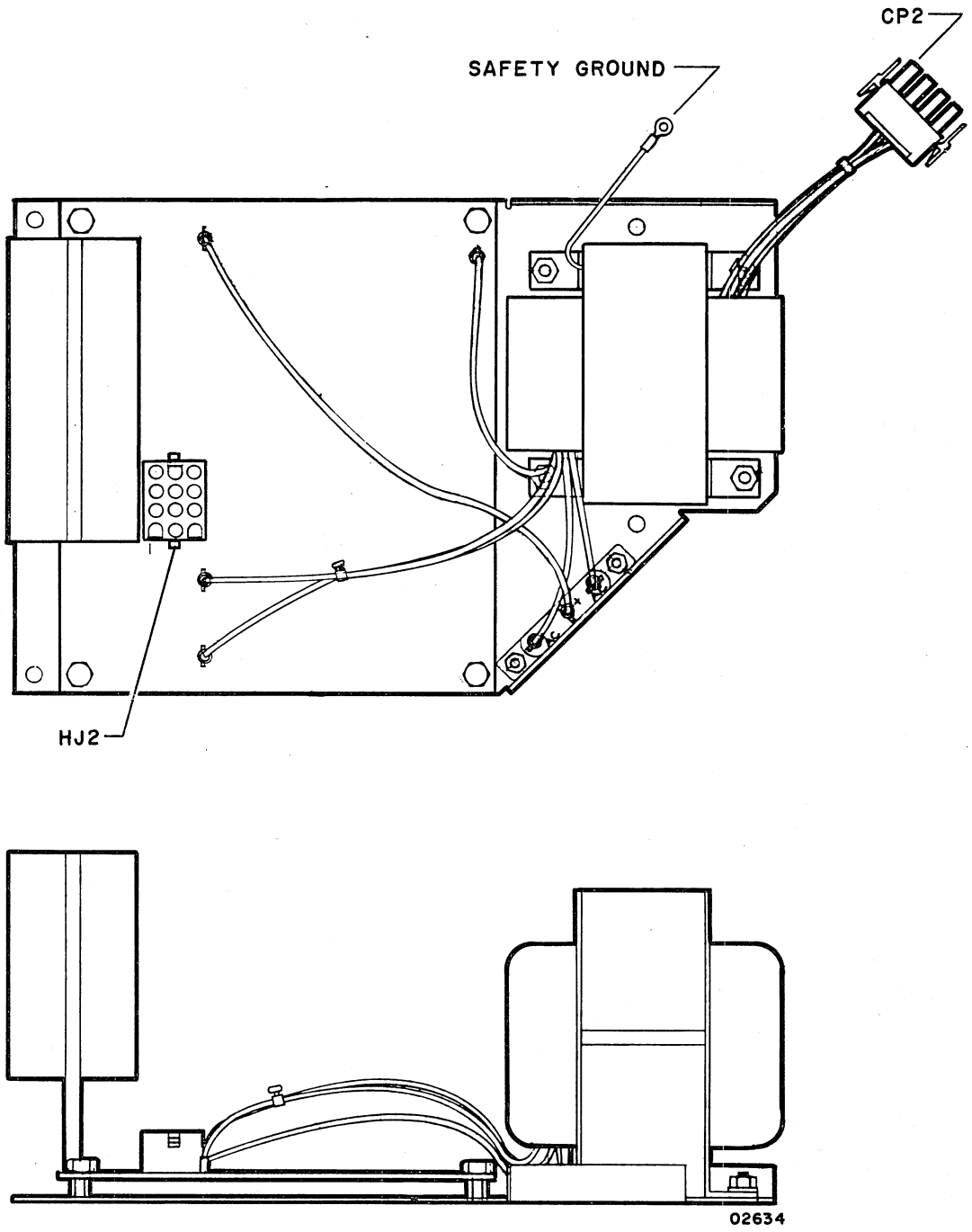

Figure 4-8. Top and Front Views of Power Supply Module

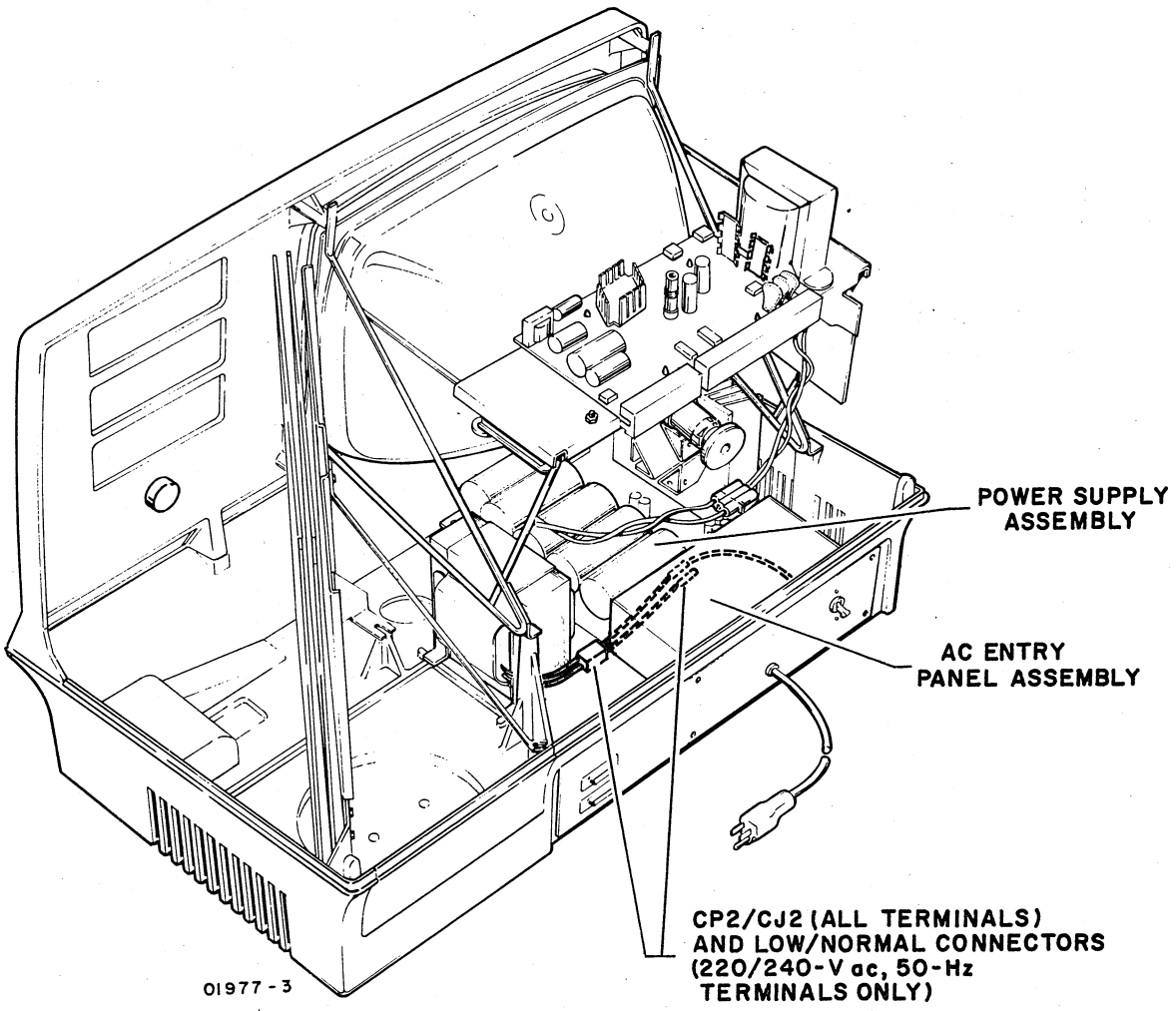

Figure 4-9. Location of Power Supply in Display Terminal

AC input power enters the ac entry panel at the rear of the display terminal and is coupled to the power supply via cable connectors CJ2/CP2. Jumper connections on CJ2 are used to match input line voltage to the primary of the power supply transformer.

AC Input Voltage	Line Input to CJ2	Jumpers on CJ2
115	Pins 1 and 2	Pins 1 to 3 and 2 to 5
220 (Low)	Pins 1 and 4*	Pin 2 to 3
240 (Normal)	Pins 1 and 6*	Pin 2 to 3

* Check AC/DC Power Interconnect Diagram in section 5 for internal connection of 220 V ac (low) or 240 V (normal) inputs.

NONIMPACT PRINTER

The nonimpact printer is a serial-input, RS-232-C-compatible, thermal printing device capable of printing at speeds up to 30 characters per second. A single printhead, containing a 5- by 7-dot matrix, is used to print one character at a time over an 80-character print line. Characters are formed by bringing the printhead into contact with heat-sensitive paper and heating selected elements of the matrix. The printer is capable of performing the following operations in response to input data commands.

- Character Print — printhead moves down, contacts the paper, and printhead elements heat to print the selected character. After printing, the printhead moves back off the paper to the next column for printing (see appendix A for characters and control code listing).
- Backspace — printhead moves one column to the left.
- Line Feed — paper advances either one or two lines, depending on setting of Line Spacing switch.
- Carriage Return — printhead returns to left margin of paper. Printer does an automatic carriage return and line feed after reaching print column 80.

Figure 4-10 shows the various subassemblies of the nonimpact printer. Maintenance philosophy for the printer power supply is to replace it entirely upon failure; the four regulated outputs of the printer power supply (+5, +16, +24, and -24 V dc) should measure within ±5 percent of their nominal output level. The following paragraphs discuss the functional theory of the logic and interface circuits of the printer as related to operation of the print mechanism.

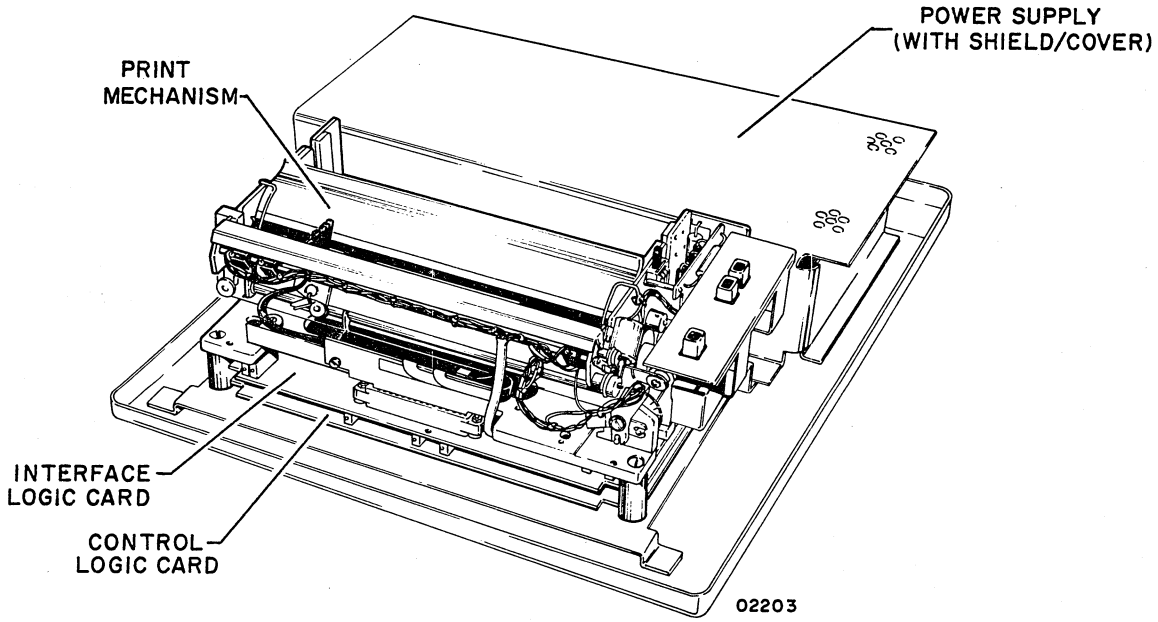

Figure 4-10. Nonimpact Printer Subassemblies

Interface connectors, power connectors, fuse holder wiring, and internal cable routing for the nonimpact printer are identified in figure 4-11. The replaceable power supply is shown in relation to the connectors near the rear panel of the printer cabinet. For the pin assignments of the RS-232-C interface connector, refer to section 1 and the table for the Peripheral Connector Pin Assignments. The J5 connector shown in the diagram is not used in this subsystem application.

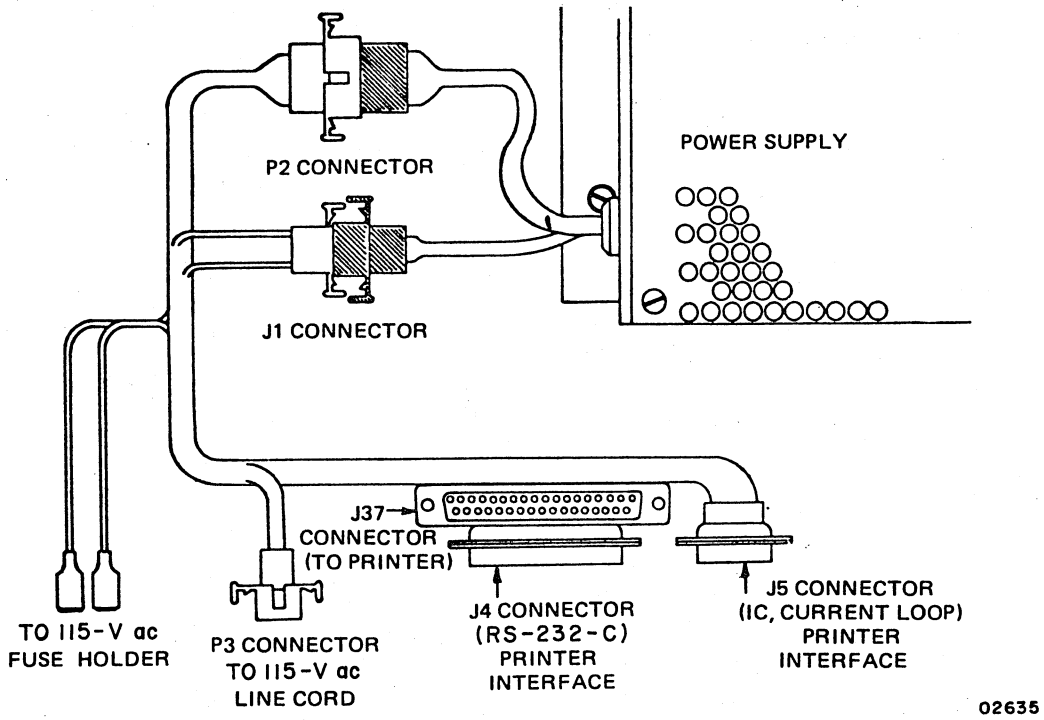

Figure 4-11. Nonimpact Printer Wiring Harness

Figure 4-12 is a functional block diagram of the printer components and figure 4-13 shows the location of various print mechanism components. Refer to this latter figure to locate components as they are described in the following text. As shown in figure 4-12, serial input data enters a serial-to-parallel converter. When the converter receives the Stop bit of an input word, the word shifts to decoder/encoder logic and a Start pulse starts the command logic. Parity error checking is also done during the Stop bit time, and if an error is detected, an error code goes to the decoder/encoder in lieu of the data word code and the Start pulse starts the command

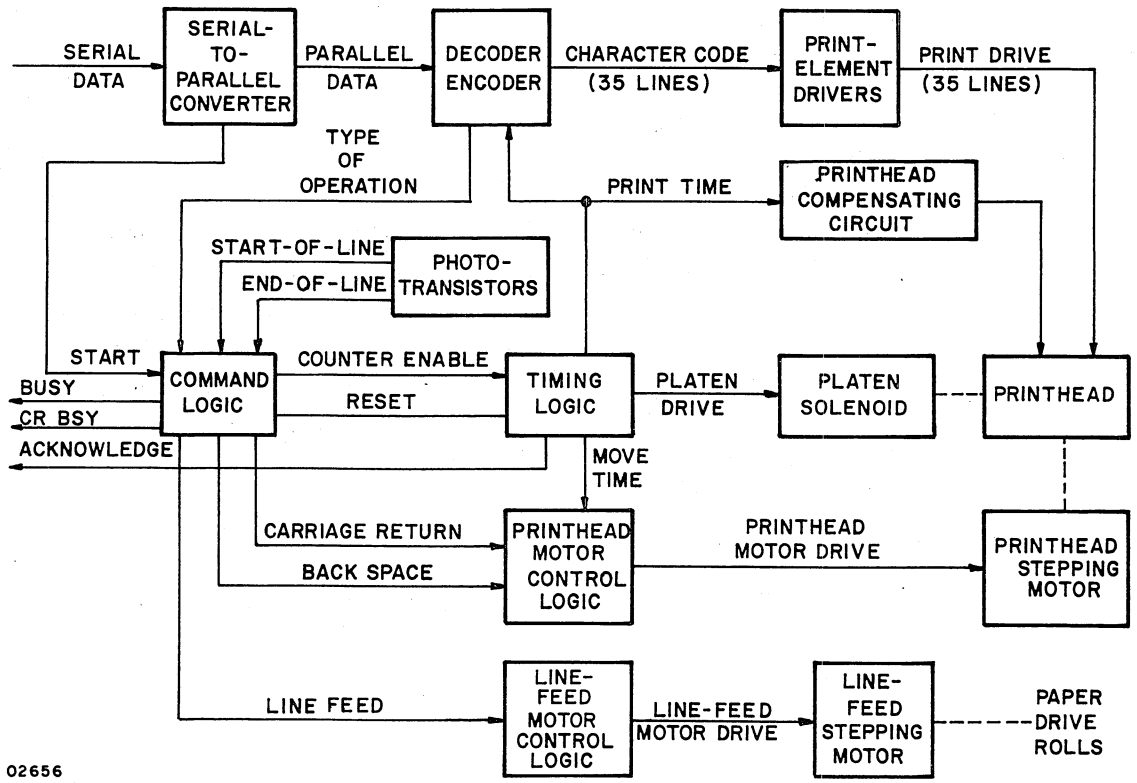

Figure 4-12. Nonimpact Printer Block Diagram

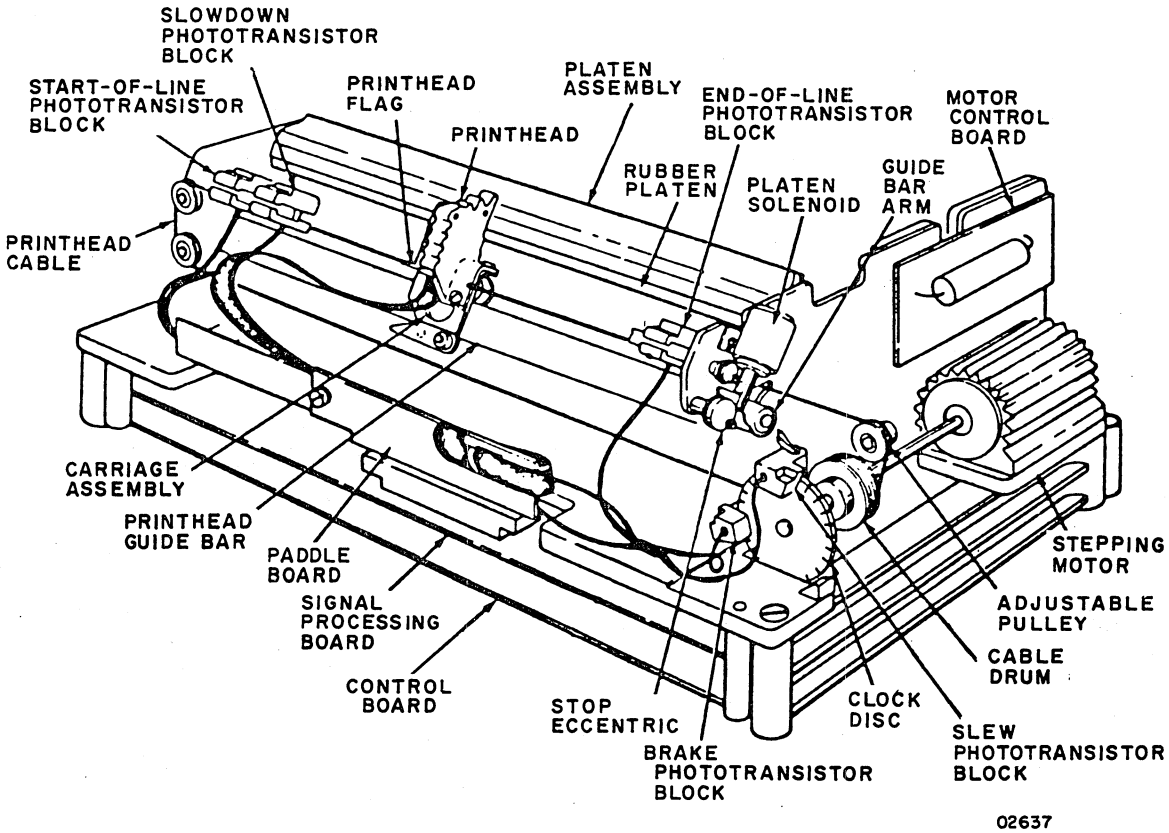

Figure 4-13. Nonimpact Printer Print-Mechanism Assembly

logic. The decoder/encoder indicates the type of operation (print or control) to be performed to the command logic. Once an operation starts, the Busy signal rises and remains high until the operation is complete (about 32 ms).

A character-print operation activates the timing logic via a Counter Enable signal; the timing logic, in turn, first energizes the platen solenoid with a Platen Drive signal and then begins moving the printhead down toward the platen. Figure 4-14 shows the timing for a character print operation. As the printhead contacts the paper and moves it against the platen, the timing logic turns on the Print Time line, which in turn enables the decoder/encoder to pass character code information to the print element driver circuits. The printhead compensating circuit also energizes at this time to complete the printhead element circuit. The printhead compensating circuit controls the heating of the printhead heater elements relative to the printing speed. The elements specified by the input character code then heat up to transfer a dot-matrix representation of the desired character to the heat-sensitive paper. Timing logic then terminates the Print Time and Platen Drive signals, and the printhead moves back from the platen as the platen solenoid spring is released. As an

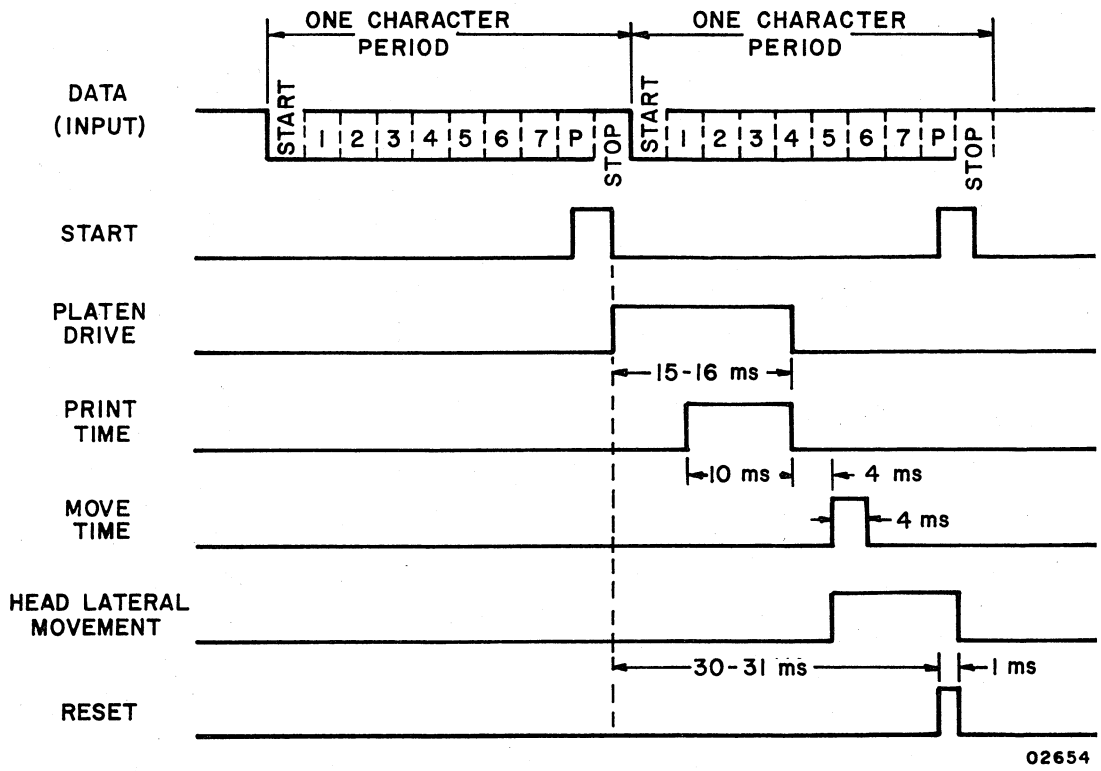

Figure 4-14. Nonimpact Printer Character Print Timing

indication that printing is complete, timing logic causes the Acknowledge signal line to go low. During the time the printhead is returning to its start position, the timing logic generates a Move Time pulse. The Move Time pulse activates the printhead motor-control logic, which in turn causes the printhead stepping motor to move the printhead to the next character position. When this operation is complete, the timing logic issues a Reset pulse to the command logic to reset the command logic in preparation for the next operation. As the command logic resets, the Busy signal drops.

A backspace operation is much the same as a character-print operation, except that a backspace code does not enable the heating of any print elements and causes printhead motor-control logic and the printhead stepping motor to move the printhead back one space.

Line feed operations are also similar to the preceding two operations, but differ in the following manner. The line-feed operation blocks both printing and printhead movement by inhibiting all outputs from the timing logic except the Reset and Acknowledge signals. The line-feed code raises a Line Feed signal from the command logic to activate the line-feed motor-control logic and line-feed stepping motor in lieu of the printhead control circuits. The line-feed stepping motor advances paper either one or two lines, depending upon the setting of the line-spacing switch. Figure 4-16 shows the timing for a line-feed operation. The end-of-line phototransistor initiates a line-feed/carriage-return operation if the printhead attempts to move past the 80th character position of a print line. The start-of-line phototransistor is used to terminate either the automatic line-feed/carriage-return operation or a code-input-initiated carriage-return operation.

A receive carriage-return code, performs only a carriage-return operation and does not automatically line-feed the print mechanism; this occurs in the following manner. The decoder decodes a carriage-return operation and specifies that type of operation to the command logic, which started as the carriage-return code shifted into the decoder. The command logic, in turn, generates a Carriage Return signal to the printhead motor-control logic, which moves the printhead in reverse via the printhead stepping motor until the start-of-line phototransistor senses the printhead and stops the carriage-return operation. The command logic holds the Busy signal high for a short time after the printhead has returned to the left margin (column 1 or start-of-line) to ensure that the printhead is stable and ready to accept the next print-character command. Figure 4-16 shows the timing for a carriage-return operation.

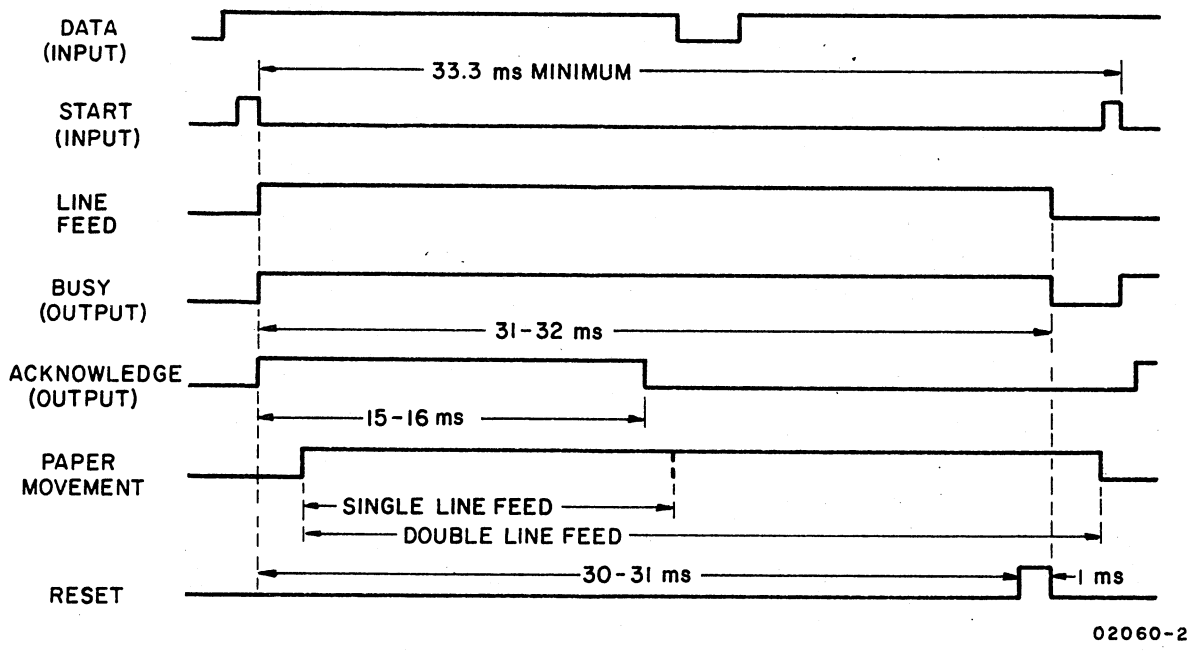

Figure 4-15. Nonimpact Printer Line Feed Operation Timing

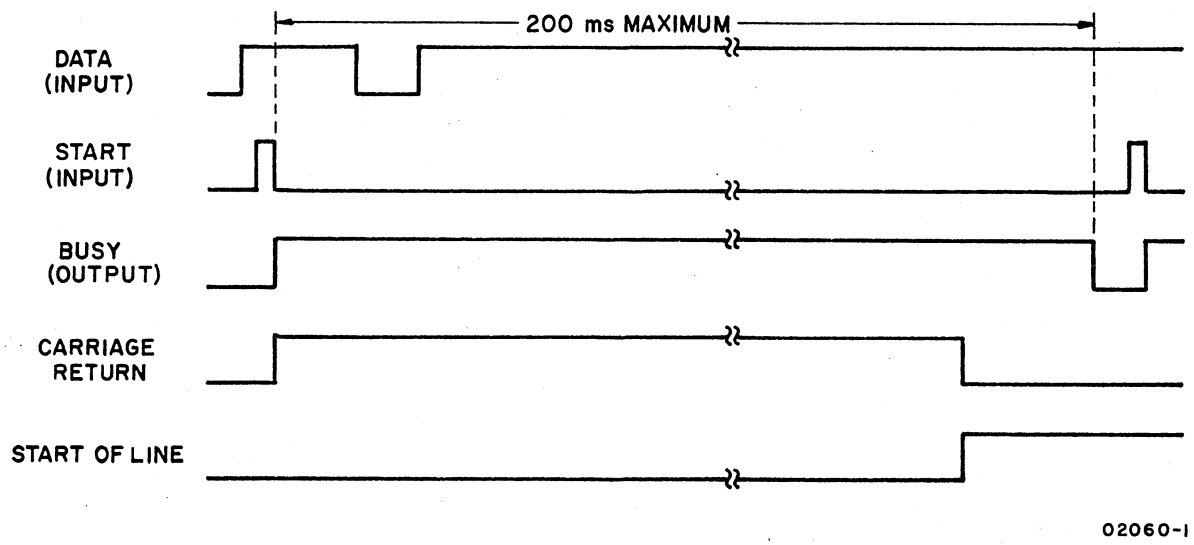

Figure 4-16. Nonimpact Printer Carriage Return Operation Timing

IMPACT PRINTER

Functional theory of the impact printer is included in the Matrix Printer Reference and Field Service Manual, so theory of operation information for the impact printer is not repeated in this manual. Refer to preface of this manual for the publication number of the Matrix Printer Reference and Field Service Manual and for ordering information.

MISCELLANEOUS TERMINAL COMPONENTS

Miscellaneous field-replaceable components of the display terminal include the following items: the Sonalert (audible alarm), the intensity control and cable assembly, the intensity control knob, and a small, plastic support post for the keyboard display logic module assembly. Section 6 of this manual includes procedures for removing and replacing all of the items within the crt portion of that section.

Logic module/modem interface adapters are available which allow the modem interface to be interconnected with RS-232-C/CCITT V.24 compatible devices other than a modem. These devices may be an acoustic coupler or another display terminal (or other comparable device) which is within 50 feet (15.24 meters) of the host display terminal.

Most of the adapter cables are 18 inches (45.72 centimeters) long and are designed to be inserted between the external data set cable furnished with the host display terminal and the host display terminal's data set connector. The data set connector is mounted on the connector panel located at the rear of the terminal.

The pin assignments of the data set connector are listed in the Voltage Level Channel Interface Connector Pin Assignments table, of Section 1. With a modem interconnection, the data set cable is plugged directly into the data set connector and all the interface signal connections listed in the table are connected between the terminal and modem on a one-to-one basis.

With the modem interface adapter interconnections, some of the interface signal connections are altered/deleted by the corresponding adapter cable. A list of these interconnections follows:

- Bell Data Set Model 113A interconnection-adapter cable (part number 61407806) makes all connections of the interface signals (as listed in the Voltage Level Channel Interface Connector Pin Assignments table, Section 1) except for pins 8 and 20 that connect Data Set Ready to the Carrier On signal.

- Anderson Jacobson Acoustic Coupler, Model ADAC 1200 interconnection-adapter cable (part number 61407807) will connect all interface signals (as shown in the Voltage Level Channel Interface Connector Pin Assignments table, Section 1) except pins 11 and 19 that connect Secondary Request to Send signal.

- Anderson Jacobson Acoustic Coupler Model ADAC 242 interconnection-adapter cable (part number 61407808) is used and all the interface signal connections in the Voltage Level Channel Interface Connector Pin Assignments table, Section 1 are resultantly connected, except for pin 23 which is left open.

- Direct back-to-back interconnection with another display terminal or comparable device that requires a switched Receive Line signal detector (Carrier On signal) — adapter cable (part number 61407809) is used and the interface signals result in being connected as shown in part A of figure 4-17.

- Direct back-to-back interconnection with another display terminal or comparable device that requires a constant Carrier On signal-adapter cable (part number 61407810) is used and the interface signals are connected as shown in part B of figure 4-17.

- Female to male converter interconnection-adapter cable (part number 61407811) uses a Reversed Pin signal configuration and requires a data set cable (part number 61407832/41) for hookups in Great Britian.

- 1743-2 Interface interconnection-adapter cable (part number 61407812) uses five signal paths to adapt the 755 printer to the 1743-2 system. The adapter cable connects between the 755 printer and the 1743-2 controller.

Refer to the Parts Data section of this manual for the adapter cables matrix and the adapter cables wire lists.

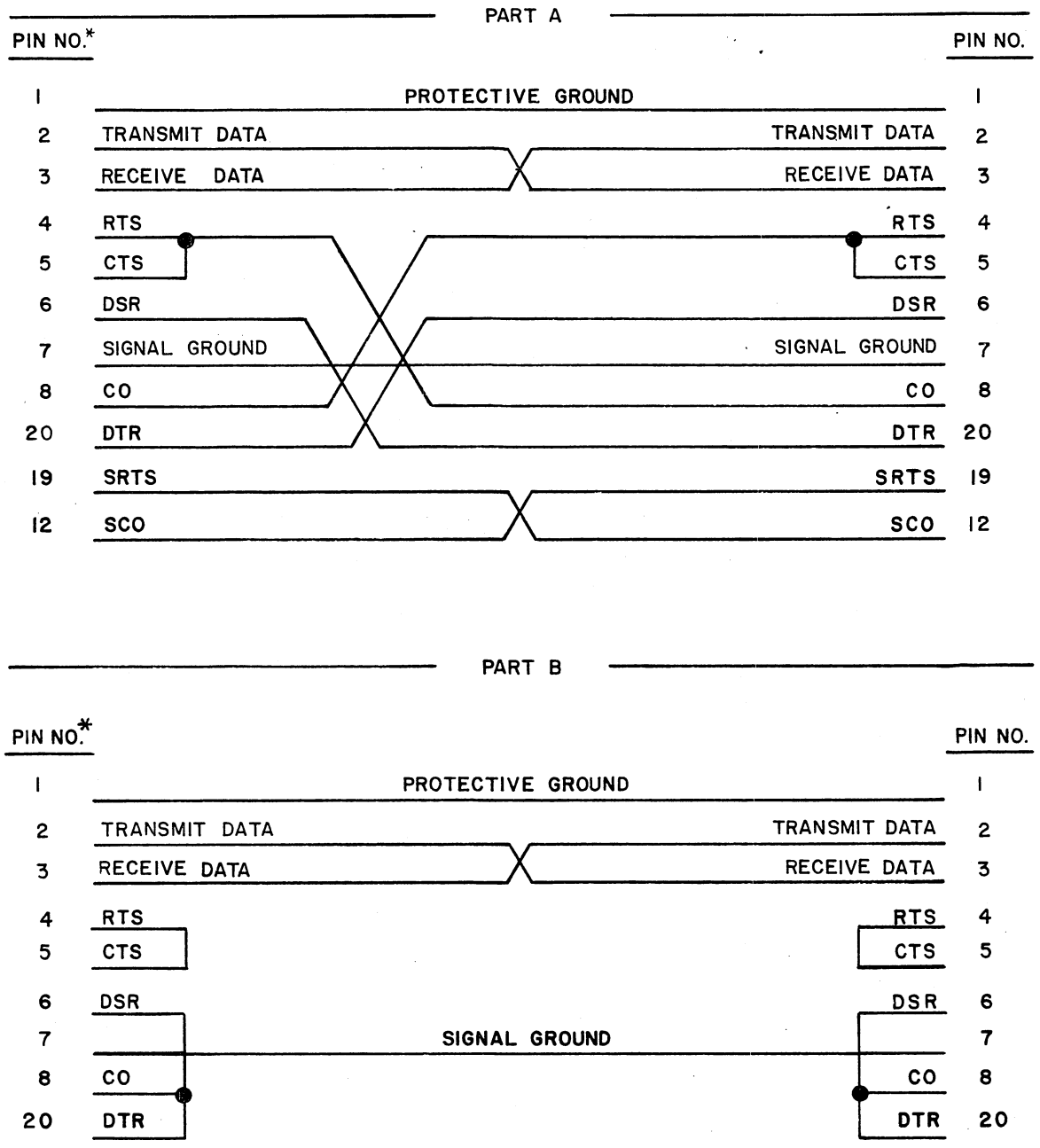

*ALL OTHER PINS *(REFER TO THE VOLTAGE LEVEL CHANNEL INTERFACE CONNECTOR PIN ASSIGNMENTS TABLE IN SECTION I)* PIN TO PIN

02718-2

Figure 4-17. Interface Connection Routing of Back-to-Back Adapter Cables

Section 5 contains logic diagrams, timing diagrams, schematics, ac/dc power distribution diagrams, signal interconnection diagrams, and block diagrams for the display terminal. Diagrams of a similar nature for the impact and nonimpact printers are included in their respective maintenance manuals (see preface). Information on how to interpret the logic diagrams precedes, and is part of, the logic diagram set. Information on the operation of individual logic chips may be found in the Key to Logic Symbology for Terminal Equipment Manual (see preface). Additionally, the logic set includes facing-page logic descriptions that describe the functions of the circuits depicted on each logic diagram.

The title block of each logic diagram contains the following information:

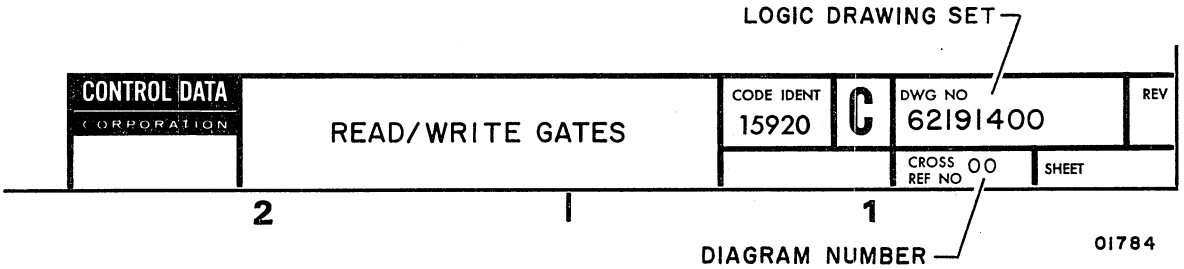

In the diagrams that follow, the logic drawing set number refers to the entire set of diagrams while the diagram cross-reference number identifies the specific diagram. The cross-reference number is the only reference term that can appear on the inputs and outputs of the circuitry to indicate that the source or destination of the signal is found internally on another diagram of this logic set. Lack of a cross-reference number on an input or an output line indicates that this line comes from or goes to an external location (one that is not part of this logic set).

The logic module assembly PC board of the display terminal has a number of test points that have been brought to the board edge for ease of access. These test points are grouped as TP1 (near the upper front edge of the installed PC board) and TP2 (near the lower rear edge of the installed PC board). Test signals available at these two test points are shown on the logic module assembly PC board logic diagrams and are also listed here for easy reference. Table 5-1 gives the test point pin number, the diagram on which the test point is depicted in parentheses, the test signal name, and a brief description of the test signal.

NOTE

This section contains the basic logic diagram set, P/N 62200824. Except for small differences, logic sets P/N 62201031 (for the CC555-A through CC555-K) and P/N 62201025 (for the CC555-L and CC555-M) are identical to the P/N 62200824 set. Sheets from these two logic sets that are the same, are left out to prevent repeating the sets in their entirety. Sheets containing differences are added to the manual in section 5 and appendix C.

TABLE 5-1. LOGIC MODULE ASSEMBLY TEST POINT DATA

TEST POINT	SIGNAL NAME	SIGNAL DESCRIPTION
TP1-1 (115)	+BAUD SEL 3	Used in conjunction with TP1-2, TP1-3 and TP1-7 to externally select an operating baud rate. See facing page description for diagram 115.
TP1-2 (115)	+BAUD SEL 2	
TP1-3 (115)	+BAUD SEL 1	
TP1-4	Not Used	
TP1-5 (100)	-DISABLE MAIN OSC	Grounding (logical 0) this test point disables the main oscillator.
TP1-6	Not used	
TP1-7 (115)	+BAUD SEL 4	See TP1-1, TP1-2, and TP1-3, preceding.
TP1-8 (110)	+BAUD CLOCK	Square wave clock signal equal to 16 times the selected baud rate.
TP1-9 (100)	+MAIN OSC	Nominal 14.5962-MHz oscillator signal on which main timing is based.
TP1-10 (110)	-DISABLE BAUD OSC	Grounding (logical 0) this test point disables the baud oscillator.
TP1-11 (110)	-DISABLE BAUD CLOCK	Grounding (logical 0) this test point disables the baud clock.
TP1-12 (110)	+BAUD OSC	Square-wave-output oscillator operating at 6.745 MHz and used to derive communication baud rates.
TP2-1 (105)	+COMP	A positive pulse indicating coincidence of the 2^3 through 2^0 counts of the cursor and horizontal counters; the signal is a component of the +X COMP signal.
TP2-2	Not Used	
TP2-3	Not Used	
TP2-4 (102)	+CHARACTER DOTS	Positive 70-ns pulses corresponding with unblank signals from the logic module assembly to the video display assembly.
TP2-5	Not Used	
TP2-6 (100)	-HORZ LOAD	Negative 600-ns pulse that occurs every 63 µs; used for horizontal control.
TP2-7 (100)	-(T8+T2)	Negative 70-ns pulse occurring at either T8 (read memory operations) or T2 (write memory or cursor movement operations).
TP2-8 (105)	+CURSOR COMP	Positive 630-µs pulse occurring every 16.66 ms (60-Hz terminals) or 20 ms (50-Hz terminals); indicates match of horizontal and vertical counters with X and Y cursor counters.
TP2-9 (100)	-VERT LOAD	Negative 63-µs pulse occurring every 16.66 ms (60-Hz terminals) or 20 ms (50-Hz terminals); used for vertical control.
TP2-10 (100)	+ENABLE SCAN	Positive 63-ns pulse occurring every 63 µs for timing control.
TP2-11 (105)	+X COMP	Positive 600-ns pulse indicating match of horizontal and X cursor counters and occurring every 63 µs.
TP2-12 (112)	+LST LN COMP	Positive signal indicating match of last-line and Y cursor counters when in scroll mode.

REVISION RECORD

REV	CO	DESCRIPTION	DRFT	DATE	CHKD	APP
A	10653-51	RELEASED CLASS A	EE	5/21/76		K.T.
B	CD 11615	REVISED PER ECO	WJN	8-6-76	WJN	
C	CD 11904	REVISED PER ECO	JM	12-22-76		
D	CD 12756	REVISED PER ECO	JM	2-17-78	WJN	
E	CD 12988	REVISED PER ECO	WJN	9-7-78	WJN	
F	13059	REVISED PER ECO	EE	10-5-78	EE	
G	13164	INACTIVE - SERVICE USE ONLY SUPERCEDED BY 62201033	WJG	1-25-79	WJG	

SHEET REVISION STATUS

SHEET NO	CROSS REFERENCE NUMBER	MODULE LOCATION	REV	LOGIC DIAGRAM TITLE
1			G	LOGIC DIAGRAM CONTENTS SHEET
2			G	KEY TO DIAGRAMS-PHYSICAL LOCATION CODES
3			G	KEY TO SYMBOLS
4	100		G	MAIN TIMING, HORIZONTAL, SCAN, AND VERTICAL COUNTER
5	101		G	HORIZONTAL AND VERTICAL CONTROL, VERTICAL ADDRESS COUNTER, READ/WRITE CONTROL
6	102		G	MEMORY OUTPUT LATCH, CHARACTER GENERATOR, VIDEO SERIALIZER, BLINK COUNTER, DISPLAY CURSOR F/F
7	103		G	"Y" CURSOR COUNTER AND MUX, VIDEO DRIVER CIRCUIT
8	104		G	CURSOR FUNCTION DECODE, CURSOR POSITION DECODE, LAST LINE COUNTER
9	105		G	UART, "X" COMPARE, CURSOR COMPARE
10	106		G	MEMORY BANK "A"
11	107		G	MEMORY BANK "B"
12	108		G	CLEAR CONTROL, RECEIVE AND KEYBOARD CONTROL
13	109		G	MEMORY ADDRESS CONVERSION, DATA DECODE
14	110		G	BAUD COUNTER, MODEM CONTROL
15	111		G	PHASE LOCK OSCILLATOR CURRENT LOOP RECEIVE AND TRANSMIT
16	112		G	INTERNAL SWITCHES, BREAK AND ALARM LAST LINE COMPARE
17	113		G	X CURSOR CONTROL, Y CURSOR CONTROL, X CURSOR COUNTER
18	114		G	MODEM INTERFACE, RTS CONTROL
19	115		G	BAUD SELECT, X/Y POSITION CONTROL
20			G	TIMING DIAGRAM
21			G	TIMING DIAGRAM
22			G	TIMING DIAGRAM
23			G	BLOCK DIAGRAM

INACTIVE

TITLE: LOGIC DIAGRAM CONTENTS SHEET

CODE IDENT 15920 | C | DRAWING NO 62200824

SCALE | CROSS REF NO | SHEET 1 OF 23

REFERENCE DRAWING

CONTROL DATA

FIRST USED ON: CC5BIA,B,C,D

DWN: E. ERSFELD 4/8/76

CHKD: E. Ersfeld 5/17/76

ENGR: 5/19/76

MFG: 5/19/76

APPR: 5/19/76

COMPONENTS, EXCEPT AS NOTED

TOLERANCE	VALUE	RATING
RES		
CAP		

NOTES:

1. FOR LOGIC CHIP INFORMATION SEE DWG. 82297000 (KEY TO SYMBOLS).

PHYSICAL LOCATION CODES OF THE 156 PACKAGE MODULE

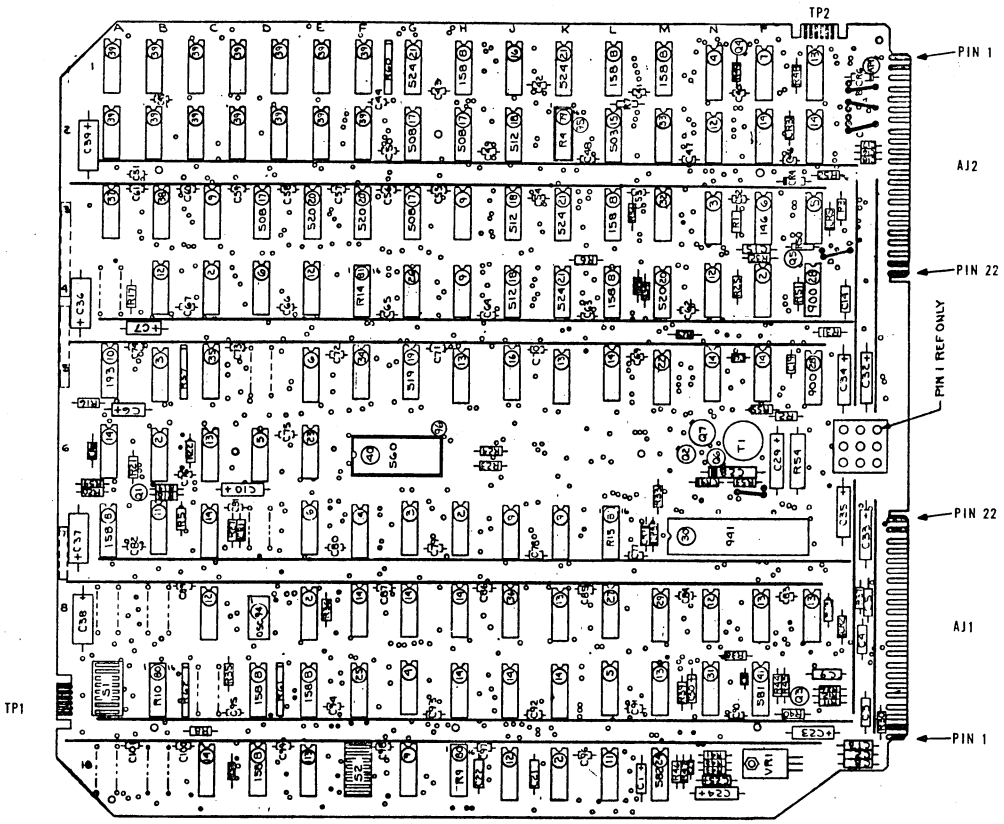

POWER AND GROUND PINS

+12V	AJ3-
+5V	AJ3-
	AJ3-
	AJ2-22
	AJ1-22
-12V	AJ3-
	AJ3-19
GND	AJ3-
	AJ3-
	AJ2-21
	AJ2-18
	AJ1-21
	AJ1-20

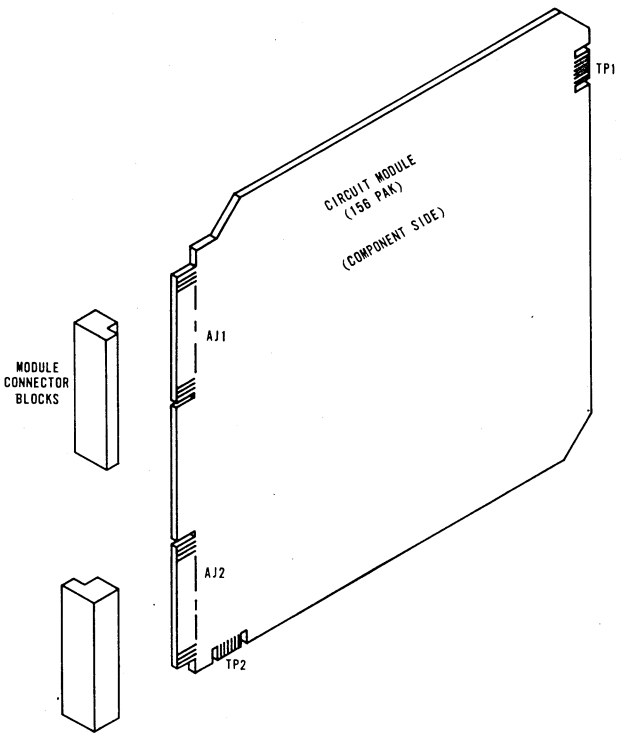

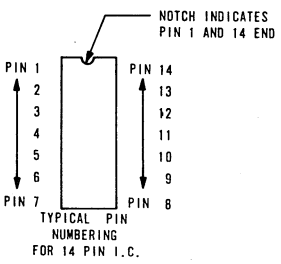

GENERAL LOGIC SYMBOL INFORMATION

INTEGRATED CIRCUIT LOGIC SYMBOL

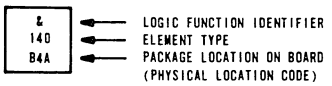

TAGGING INFORMATION

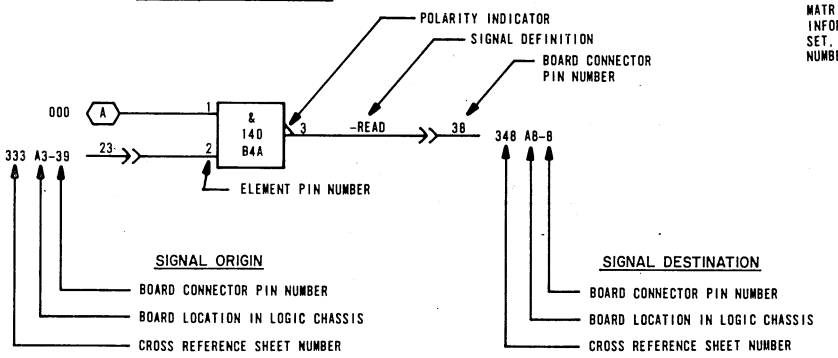

ON BOARD, OFF SHEET TAGGING

IN A LOGIC DIAGRAM SET HAVING MORE THAN ONE SHEET, A HEXAGON IS USED TO INDICATE THAT THE SIGNAL IS COMING FROM, OR GOING TO, ANOTHER SHEET OF THE SAME BOARD. (NOTE: EACH SIGNAL NAME IN THIS LOGIC SET HAS BEEN PRECEDED BY A ''+'' (INDICATING AN ACTIVE HI) OR A ''-'' (INDICATING AN ACTIVE LO)).

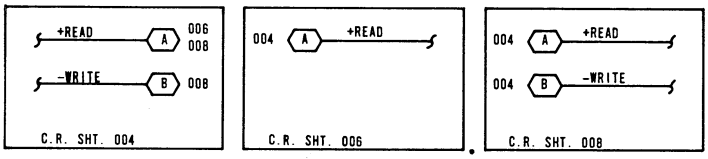

ON SHEET TAGGING

THE SMALL CIRCLES WITH ALPHA CHARACTERS INSIDE ARE USED TO SHOW A SIGNAL PATH WITHOUT ACTUALLY RUNNING A LINE FROM ONE POINT TO ANOTHER. A CIRCLE WITH AN ARROW POINTING AWAY FROM IT IS THE SIGNAL ORIGIN. IN DIRECT LINE WITH THE ORIGIN ARROW, ANOTHER CIRCLE IS DRAWN WITH AN ARROW POINTING TOWARD IT, THIS IS THE SIGNAL DESTINATION.

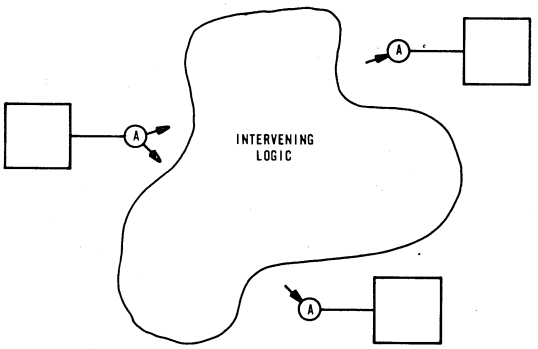

RESISTOR MODULES

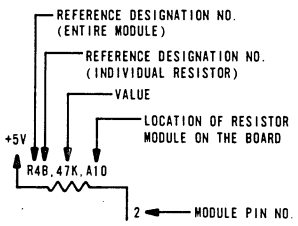

SWITCH MODULES

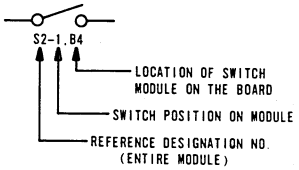

GENERAL P.C. BOARD INFORMATION

EACH PRINTED CIRCUIT BOARD, UNDER IDEAL CONDITIONS, WOULD BE REPRESENTED ON ONE SHEET. HOWEVER, DUE TO THE LARGE NUMBER OF CIRCUITS LOCATED ON SOME BOARDS, MULTIPLE SHEETS MAY BE REQUIRED. THE BOARD TYPE IS LISTED AT THE BOTTOM OF EACH DIAGRAM SHEET. THE BOARD LOCATION WITHIN THE LOGIC CHASSIS MAY ALSO ACCOMPANY THE BOARD TYPE. EACH SYMBOL ON THE DIAGRAM REPRESENTS A PORTION OF AN INTEGRATED CIRCUIT, THE ENTIRE INTEGRATED CIRCUIT OR A DISCRETE COMPONENT. EACH SYMBOL REFLECTS THE LOGIC FUNCTION IDENTIFIER, ELEMENT OR COMPONENT TYPE, AND THE ELEMENT OR COMPONENT LOCATION ON THE BOARD. COMPONENT LOCATION IS DEFINED BY AN ALPHANUMERIC MATRIX DEPENDING ON THE TYPE OF PRINTED CIRCUIT BOARD USED. FOR INFORMATION ON THE COMPONENT OR ELEMENT TYPES USED IN THIS LOGIC SET, REFER TO KEY TO LOGIC SYMBOLOGY MANUAL, CDC PUBLICATION NUMBER 82172400.

QUALIFYING SYMBOLS

& = AND
1 = OR
1 = INVERTER
X→Y = X(INPUTS) DECODED OR ENCODED TO Y(OUTPUTS)
X/Y = X(INPUT LEVEL) CONVERTED TO Y(OUTPUT LEVEL)

ELEMENT IDENTIFIERS

CDC	VENDOR
140	7400
141	7410
143	7440
146	7404
148	7402
149	7486
189	74157
200	7406
201	7408
218	7432
240	9024
507	7442
508	74153
527	74164
547	74165
901	MC1489
943	7414

VOLTAGE LEVELS

1. ANALOG OR NON-LOGIC LEVELS

2. NON-STANDARD LOGIC LEVEL

3. LOGIC LEVELS

DTL LOGIC OPERATION

HIGH (LOGICAL 1) = +2.6 TO +5.0 VOLTS
LOW (LOGICAL 0) = 0.0 TO +0.45 VOLTS
SWITCHING POINT = +1.1 TO +1.9 VOLTS

TTL LOGIC OPERATION

HIGH (LOGICAL 1) = +2.8 TO +5.0 VOLTS
LOW (LOGICAL 0) = 0.0V TO +0.45 VOLTS
SWITCHING POINT = +.85V TO +1.9 VOLTS

DIAGRAM 100
MAIN TIMING, HORIZONTAL SCAN, AND VERTICAL COUNTERS

This diagram, from bottom to top, shows the main timing, horizontal scan, and vertical counters. Reference the timing diagram on sheet 20 of this logic set during the following description of the logic on diagram 100.

MAIN TIMING COUNTER — When power is turned on, the -PWR RST signal goes low, which resets all of the counters and sets Main Timing start flip-flop (L5B). As the -PWR RST signal returns high, the 14.596-MHz +MAIN OSC clock pulses begin toggling L5B and M5. The set output of L5B (+TØ) loads the M5 shift register, and then L5B clears as the +MAIN OSC clock pulses shift the main timing pulse through the shift register to produce main timing clock pulses +T1 through +T8. These clock pulses are each 68.51 ns in duration, and it takes 616.6 ns for one complete pass through the counter. The +T8 output of M5 reenables L5B for setting and the sequence repeats, providing continuous +TØ through +T8 main timing pulses. These main timing pulses each correspond with a dot time on the display screen (see Timing Diagram, sheet 20 of this logic set).

HORIZONTAL COUNTER — The horizontal counter consists of counter circuits L4 and L3. A -(T8 + T2) clock signal toggles the horizontal counter. This clock signal is used because refresh memory write operations take longer than read operations. The normal TØ through T8 clock cycle is therefore extended from TØ through T2 of the next clock cycle for write (key-in or receive) operations. Although the horizontal counter is a divide-by-256 counter, it never reaches a full count. A horizontal control ROM, shown on diagram 101, monitors the - HORZ 2^7 through 2^0 outputs of the horizontal counter and causes a -HORZ LOAD pulse to reload the horizontal counter on count 101 (+HORZ $2^6 \cdot 2^5 \cdot 2^2 \cdot 2^0 = 1$). Each count of the horizontal counter corresponds with one 9-dot horizontal character scan time. Eighty of the 102 counts (2 through 81) correspond with the display of character dots as the crt electron beam sweeps from left to right across the screen, and 22 of the counts (82 through 101, and 0 and 1) correspond with horizontal retrace and settling time for the beam before it begins a new horizontal scan. Gate N3C out of the horizontal counter NANDs the +HORZ 2^6, +HORZ 2^4 and +T4 clock signals to produce a -(HORZ $2^6 \cdot 2^4$) signal. This signal sets a write disable flip-flop to prevent write access to refresh memory during horizontal retrace time (diagram 101).

SCAN COUNTER — The scan counter is a 4-bit decade counter (L2) that is enabled by the +ENABLE SCAN signal (count 84 of horizontal counter via horizontal control ROM), and is toggled by the -(T8 + T2) clock signal. The +SCAN 2^3 through 2^0 outputs of the counter provide timing for the vertical control ROM (diagram 101) and for the character generator ROM (diagram 102). The scan counter counts 10 scan lines (counts 0 through 9), and then outputs an enable to the vertical counter via pin 15 to increment the vertical (display line) counter. The scan counter also produces a +SCAN 10 signal by ANDing its +SCAN 2^3 and 2^0 outputs. This signal is used to increment the vertical address counter (diagram 101) and to control cursor displays (diagram 102).

Upon completion of an entire raster scan, including vertical retrace time, the vertical control ROM (diagram 101) drops the -VERT LOAD signal line low for 62.89 µs. This enables the VERT LOAD signal to NAND with the ENABLE SCAN signal and reload the scan the vertical counters simultaneously (see timing diagrams on sheets 20, 21, and 22 of this logic set).

VERTICAL COUNTER — The vertical counter consists of counter circuit L1 and flip-flop L5A. The tenth count of the scan counter enables the vertical counter while the -(T8 + T2) clock signals advance it. The vertical counter increments once for every ten counts of the scan counter, and thereby tracks the display line count. Completion of a vertical scan count occurs when the -VERT $2^3 \cdot 2^4$ signal line goes low to indicate the 24th display line has just been completed. The -VERT $2^3 \cdot 2^4$ signal enables the vertical control ROM (diagram 101), which in turn provides vertical retrace control signals.

In addition to going to the vertical control ROM, outputs from the vertical counter go to the vertical address counter (diagram 101) and the request to send (RTS) control logic (diagram 114). See the timing diagrams on sheets 20, 21, and 22 of this logic set.

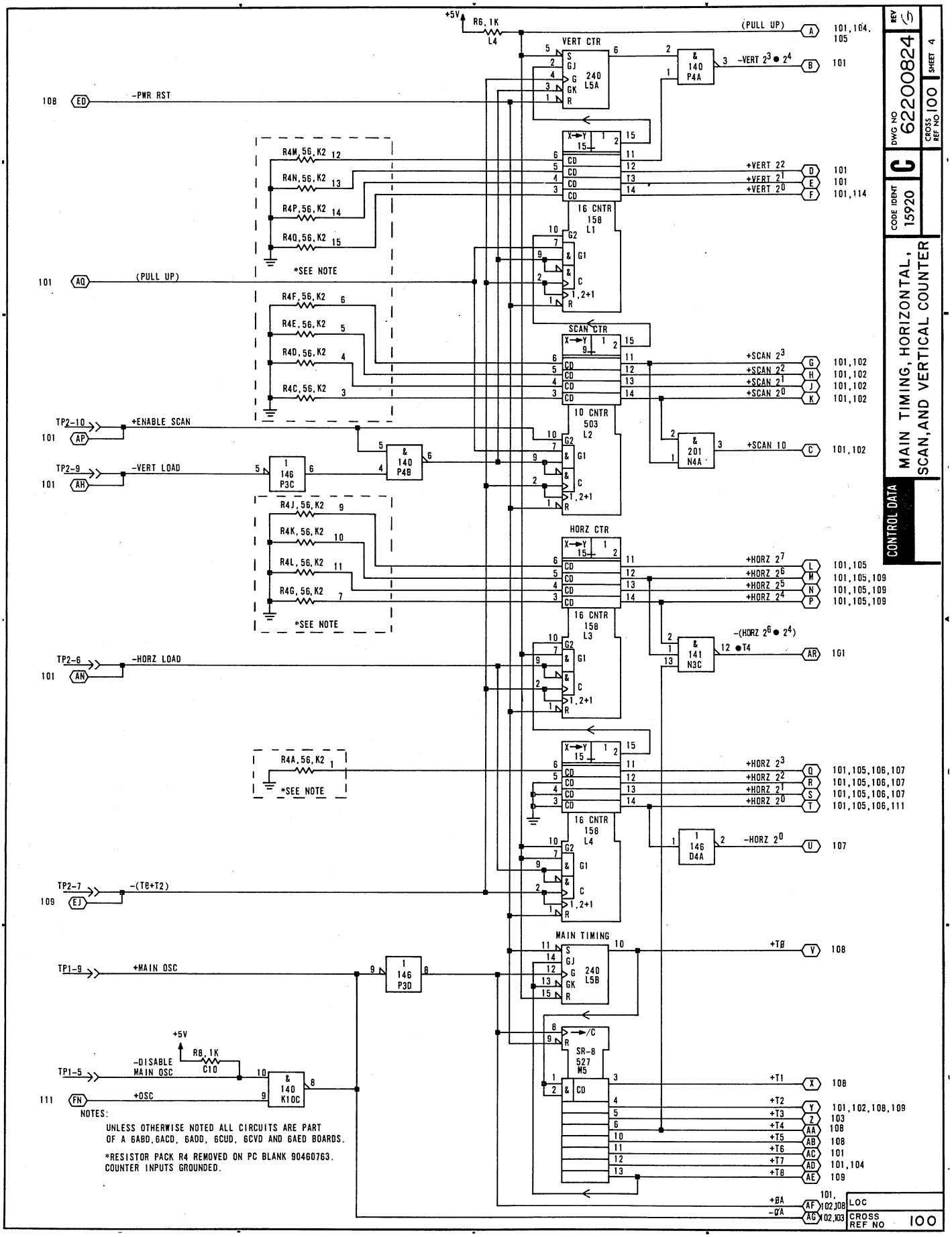
CONTROL DATA
MAIN TIMING, HORIZONTAL, SCAN, AND VERTICAL COUNTER
CODE IDENT 15920
DWG NO 62200824
REV C
SHEET 4
CROSS REF NO 100
+5V
R6, 1K
L4
(PULL UP)
VERT CTR
240 L5A
-VERT 2^3 • 2^4
-PWR RST
R4M, 56, K2
R4N, 56, K2
R4P, 56, K2
R4Q, 56, K2
*SEE NOTE
+VERT 2^2
+VERT 2^1
+VERT 2^0
16 CNTR 158 L1
(PULL UP)
R4F, 56, K2
R4E, 56, K2
R4D, 56, K2
R4C, 56, K2
SCAN CTR
+SCAN 2^3
+SCAN 2^2
+SCAN 2^1
+SCAN 2^0
TP2-10
+ENABLE SCAN
10 CNTR 503 L2
& 201 N4A
+SCAN 10
TP2-9
-VERT LOAD
1 146 P3C
& 140 P4B
R4J, 56, K2
R4K, 56, K2
R4L, 56, K2
R4G, 56, K2
*SEE NOTE
HORZ CTR
+HORZ 2^7
+HORZ 2^6
+HORZ 2^5
+HORZ 2^4
16 CNTR 158 L3
-(HORZ 2^6 • 2^4)
& 141 N3C
T4
TP2-6
-HORZ LOAD
R4A, 56, K2
*SEE NOTE
+HORZ 2^3
+HORZ 2^2
+HORZ 2^1
+HORZ 2^0
16 CNTR 158 L4
1 146 D4A
-HORZ 2^0
TP2-7
-(T8+T2)
MAIN TIMING
240 L5B
+TØ
TP1-9
+MAIN OSC
1 146 P3D
SR-8 527 M5
+5V
R8, 1K
C10
-DISABLE MAIN OSC
TP1-5
+OSC
& 140 K10C
+T1
+T2
+T3
+T4
+T5
+T6
+T7
+T8
+ØA
-ØA
LOC
CROSS REF NO 100
NOTES:
UNLESS OTHERWISE NOTED ALL CIRCUITS ARE PART OF A 6ABD, 6ACD, 6ADD, 6CUD, 6CVD AND 6AED BOARDS.
*RESISTOR PACK R4 REMOVED ON PC BLANK 90460763. COUNTER INPUTS GROUNDED.

DIAGRAM 101
HORIZONTAL AND VERTICAL CONTROL, VERTICAL ADDRESS COUNTER, AND READ/WRITE CONTROL

This diagram depicts the horizontal and vertical control logic (ROMs M2 and M3 and register M4), the vertical address counter (counter M1, flip-flop P2B flip-flop P5B and other associated gates), and the read/write control logic (flip-flops P5A, N5A and N5B, and other associated gates).

VERTICAL CONTROL ROM — The vertical control ROM monitors outputs from the vertical and scan counters and from the +50/-60-Hz switch (diagram 112) to produce vertical retrace timing signals. The ROM is enabled during vertical retrace time by the -VERT $2^3 \cdot 2^4$ signal from the vertical counter (diagram 100). Since vertical retrace timing for 50- and 60-Hz terminals vary, the +50/-60-Hz signal determines which retrace timing signals are accessed. Basically, the sequence is as follows: 1) the ROM is enabled as -VERT $2^3 \cdot 2^4$ goes low, 2) this immediately drops the +VERT UNBLK signal to blank the display screen during vertical retrace, 3) the vertical sync pulse occurs, 4) the -VERT LOAD signal drops low to reload the vertical and scan counters (diagram 100), and 5) this latter action disables the vertical control ROM because the -VERT $2^3 \cdot 2^4$ signal returns high as the counters reload. The -(T8 + T2) clock signal toggles register M4 to ensure proper timing of the horizontal and vertical sync and unblank signals. See the timing diagrams on sheets 21 and 22 of this logic set for timing details.

HORIZONTAL CONTROL ROM — This ROM is always enabled to track the output of the horizontal counter (diagram 100). It provides control of the +HORZ UNBLK (+MEMORY ACCESS), +HORZ SYNC, -HORZ LOAD, and +ENABLE SCAN signals as shown on the horizontal refresh and memory timing diagram (sheet 20 of this logic set). The +HORZ UNBLK (+MEMORY ACCESS) signal is high from counts 2 through 81 of the counter; the +ENABLE SCAN signal pulses high at count 84; the +HORZ SYNC signal pulses high for counts 85 and 86; and the -HORZ LOAD signal drops low to restart the horizontal counter clock cycle at count 101.

VERTICAL ADDRESS COUNTER — The vertical address counter, P2B, tracks the vertical position of the electron beam on the crt screen and provides information for displaying the cursor in the correct position for addressing refresh memory. This counter normally (page mode) counts, along with the vertical counter L5A (diagram 100), up through count 23. The -(T8 + T2) clock signal toggles both counters, and both are enabled for counting by essentially the same signals (+ENABLE SCAN and +SCAN 10). At count 23, gates N1A and R1B enable the vertical address counter to reload via gates P1B, and P3A and R1B the next time gate N3A from the horizontal control ROM is made. At the same time this occurs, the -VERT $2^3 \cdot 2^4$ signal line goes low disabling gate N3A while vertical retrace occurs. When vertical retrace is complete, the vertical counter (diagram 100) resets, reenabling the circuit to the vertical address counter via gate N3A and the horizontal control ROM.

The vertical address counter may also be advanced via gate N3B when the display is operating in scroll mode. When scroll mode is selected, the +LST LN COMP signal comes up to enable gate N3B whenever the cursor moves into the display line designated as the last line. Initially, the last line is display line 24; however, each time the display is scrolled, the last line count wraps around. That is, display line 24 moves to position 23 and display line 1 wraps around to position 24 as a blank line awaiting data entry. Gate N3B is enabled when the cursor is in the last line (+LST LN COMP = 1), a scroll command causes +INC Y to go high, and the horizontal position of the beam is one position past the X cursor compare point [+(X COMP + 1) = 1]. Incrementing the vertical position count when the cursor is in the last display line in scroll mode also advances the vertical address counter (memory address control) count ahead of the vertical counter (electron beam position control). This occurs when the vertical address counter is advanced once via gate N3B and then once via gate N3A. This double advance effectively wraps addressing of the display lines around so that the vertical address counter follows the last line counter; display line 1 now becomes display line 24, line 24 becomes line 23, etc. Each time the display is scrolled, this double advance takes place until the original 24th display line becomes the 1st display line. The next advance scrolls line 24 off the screen at the top and moves the 1st line back into its original 1st line position. The original line 24 then appears in display position 24 as a blank line awaiting further data entries and scroll commands.

READ/WRITE CONTROL — Read/write control logic controls the reading of information from and the writing of information into refresh memory. The write and read memory timing diagrams on sheets 21 and 22 of this logic set indicate the signal sequences for the read/write control logic. Basically, memory is always enabled for reading because the +READ/-WRITE signal line is normally high. Write memory can only occur when:

1) Data is received or keyed in — +(RCV ACT + KYBD ACT) signal is high, and
2) A horizontal retrace is not occurring — flip-flop P5A is clear.

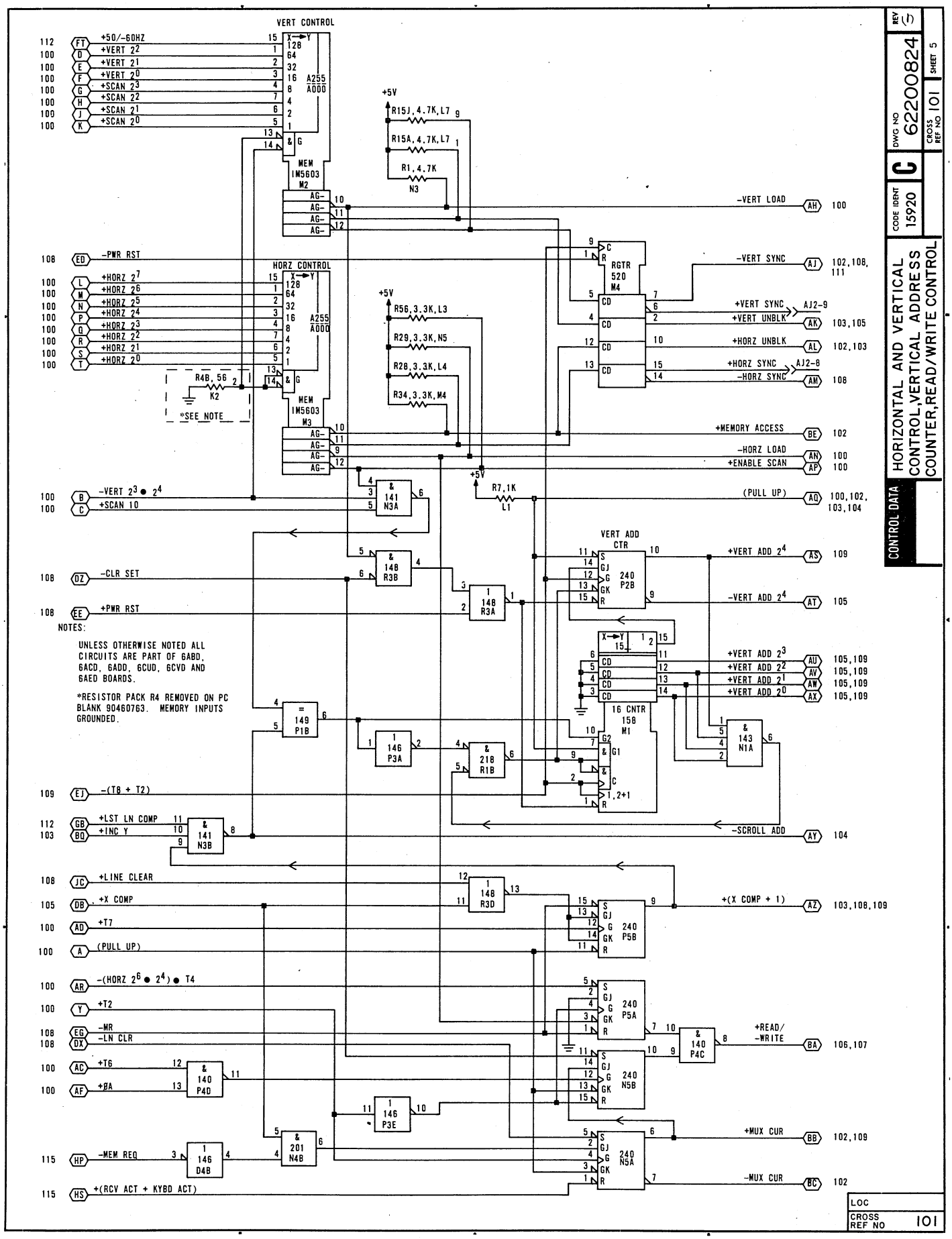
CONTROL DATA
HORIZONTAL AND VERTICAL CONTROL,VERTICAL ADDRESS COUNTER,READ/WRITE CONTROL
CODE IDENT 15920
DWG NO 62200824
REV J
SHEET 5
CROSS REF NO 101
VERT CONTROL
HORZ CONTROL
+50/-60HZ
+VERT 2^2
+VERT 2^1
+VERT 2^0
+SCAN 2^3
+SCAN 2^2
+SCAN 2^1
+SCAN 2^0
+HORZ 2^7
+HORZ 2^6
+HORZ 2^5
+HORZ 2^4
+HORZ 2^3
+HORZ 2^2
+HORZ 2^1
+HORZ 2^0
R4B, 56 K2
*SEE NOTE
MEM IM5603 M2
MEM IM5603 M3
+5V
R15J, 4.7K, L7
R15A, 4.7K, L7
R1, 4.7K N3
R56, 3.3K, L3
R29, 3.3K, N5
R28, 3.3K, L4
R34, 3.3K, M4
R7, 1K L1
-PWR RST
-VERT LOAD
-VERT SYNC
+VERT SYNC
+VERT UNBLK
+HORZ UNBLK
+HORZ SYNC
-HORZ SYNC
+MEMORY ACCESS
-HORZ LOAD
+ENABLE SCAN
(PULL UP)
RGTR 520 M4
-VERT 2^3 • 2^4
+SCAN 10
-CLR SET
+PWR RST
VERT ADD CTR
+VERT ADD 2^4
-VERT ADD 2^4
+VERT ADD 2^3
+VERT ADD 2^2
+VERT ADD 2^1
+VERT ADD 2^0
16 CNTR 158 M1
-(T8 + T2)
+LST LN COMP
+INC Y
-SCROLL ADD
+LINE CLEAR
+X COMP
+T7
(PULL UP)
+(X COMP + 1)
-(HORZ 2^6 • 2^4) • T4
+T2
-MR
-LN CLR
+T6
+ØA
+READ/ -WRITE
-MEM REQ
+(RCV ACT + KYBD ACT)
+MUX CUR
-MUX CUR
NOTES:
UNLESS OTHERWISE NOTED ALL CIRCUITS ARE PART OF 6ABD, 6ACD, 6ADD, 6CUD, 6CVD AND 6AED BOARDS.
*RESISTOR PACK R4 REMOVED ON PC BLANK 90460763. MEMORY INPUTS GROUNDED.
LOC
CROSS REF NO 101

DIAGRAM 102
MEMORY OUTPUT LATCH, CHARACTER GENERATOR, VIDEO SERIALIZER, BLINK COUNTER, DISPLAY CURSOR FLIP-FLOP

Diagram 102 depicts the logic for the following items: 1) memory output latch E3 and F3, 2) character generator G6, 3) video serializer E6, 4) blink counter A7, 5) display cursor flip-flop P2A, 6) inhibit display flip-flops A6B and A6A, and 7) highlight control circuit E10, and flip-flops C10A and C10B.

MEMORY OUTPUT LATCH — The 4-bit latches, E3 and F3, receive seven bits (+MEM 2^6 through 2^0) of character code information from memory bank A (diagram 106) or memory bank B (diagram 107). Each memory is accessed by alternating HORZ 2^0 clock signals: +HORZ 2^0 accesses memory A and -HORZ 2^0 accesses memory B. The -(T8 + T2) clock signal loads the latches with character code information from the appropriate memory (memory A = characters 1, 3, 5 ... 79 and memory B = characters 2, 4, 6 ... 80) once every character-line clock cycle (see memory timing, sheet 22). The character information loaded into the latches is then applied to character generator G6 and highlight control ROM E10 circuits. Latch F3 also latches the +CUR COMP signal. This signal occurs when the count of the horizontal counter (diagram 100) matches that of the X cursor counter (diagram 113) and the count of the vertical address counter (diagram 101) matches that of the Y cursor counter (diagram 103).

CHARACTER GENERATOR — The character generator is a ROM that converts character code and scan line inputs into 7 bits of dot information. This enables formation of dot pattern characters on a 7- by 9-dot character matrix during successive, vertically incremented horizontal scans of a display line. The combination of a scan line and a character code input generates the 7 dots required for composing one horizontal character scan. Nine scans are then required to compose an entire character area; the 10th scan line is used for displaying the cursor. The dot patterns generated by the character generator pass to a video serializer, which serializes the dot codes before sending them to the video display circuits.

VIDEO SERIALIZER — The video serializer accepts 7-bit inputs from the character generator each -(T8 + T2) clock cycle. Loaded with each 7 bits of dot information are a leading and a trailing blank bit (logical 0). These blank bits enable 2-dot spacing between adjacent horizontal character displays. Once loaded, the serializer shifts out a character dot on each -ØA clock pulse. The +ØA clock pulses AND with the output of the serializer to produce either a blank or an unblank signal to the video driver (diagram 103). Notice that the -(T8 + T2) clock signal, which loads the video serializer, can be blocked by Inhibit Display flip-flops A6A and A6B.

BLINK COUNTER AND DISPLAY CURSOR FLIP-FLOP — The blink counter divides the frequency of the -VERT SYNC signal by 16 to provide blink capabilities for the cursor display and for the blink highlight feature of the display. The blink counter alternately enables and disables the Display Cursor flip-flop for 8 display pages. The +CUR COMP and +SCAN 10 signals coincide every raster scan to provide a set input to the Display Cursor flip-flop. If the flip-flop is enabled by the blink counter, it sets on the next -(T8 + T2) clock pulse. As it sets, the -DISPLAY CURSOR FF signal line goes low to enable the cursor display. The integrity of cursor display timing and character display timing is maintained in the following manner: on the 1st -(T8 + T2) clock signal the +CUR COMP rises; the next -(T8 + T2) clock signal latches the +CUR COMP signal just before it drops; the 3rd -(T8 + T2) clock pulses sets the Display Cursor flip-flop and enables display of the cursor at the same time a new character code is being latched (+CUR COMP from F3-15 goes to 0); the 4th -(T8 + T2) clock signal clears the Display Cursor flip-flop so that the cursor display only lasts one character scan time.

INHIBIT DISPLAY FLIP-FLOPS — Flip-flops A6A and A6B are both Inhibit Display flip-flops. When data is being written into refresh memory (+MUX CUR goes high), both A6B and A6A direct set as the -MUX CUR signal drops low on a T2 clock pulse. Two T2 clock pulses after the Mux Cursor flip-flop sets (diagram 101) flip-flop A6B clears and permits A6A to clear on the next T2 clock pulse. When either A6B or A6A is set, it blocks the shifting of character dots out of the video serializer. This is done for a few character times to prevent spurious dot patterns from appearing on the display screen when the cursor is multiplexed to a new location in memory (write memory operation).

During highlight commands (keyboard control key functions), flip-flop A6A sets for one character time as the control character is decoded to prevent the display of the control code symbol associated with the control code.

HIGHLIGHT CONTROL CIRCUIT — The 4- by 256-bit ROM at location E10 implements the highlight features of the display by decoding the following control codes: initiate low intensity (SO or 016_8), initiate blink (ETB or 027_8), and end highlight (SI or 017_8). To do this, the E10 ROM monitors all of the codes out of memory (+MEM 2^6 through 2^0). In addition, it also monitors the output of Blink Control flip-flop C10A. The output of blink counter A7 toggles the Blink Control flip-flop so that the flip-flop cycles on and off about twice a second.

The Blink Control flip-flop is only used in conjunction with the initiate blink control code (ETB or 027_8). While this code is applied to the input of memory E10 and the Blink Control flip-flop is set, output pins 10 and 11 of E10 go low: 10 to inhibit the display of the symbol for the ETB code and 11 to initiate reduced intensity (set flip-flop C10B). C10B remains set either until the end of the scan line when the +MEMORY ACCESS and +HORZ UNBLK drop to reset it, or until the highlight control memory detects an end highlight code (SI or 017_8) within the same scan line. Detection of the end highlight code causes pin 12 of E10 to go low and enable flip-flop C10B for clearing on the next +T2 clock pulse. The Blink Control flip-flop (C10A) remains set for 16 pages and then clears for 16 pages so that input pin 15 to memory E10 goes low. During the 16 pages when E10-15 is low, output pin 11 remains high, C10B does not set, and display dots appear at normal brightness. Alternately enabling and disabling low intensity scans approximately once every 16 pages causes displayed characters within the highlight field to appear as blink characters.

The initiate reduced intensity code (SO or 016_8) has a similar effect, with the exception that the state of the Blink Control flip-flop is disregarded. The highlight field appears as a steady reduced intensity field rather than as a blinking field.

Either the occurrence of the cursor display scan (SCAN 10 = 1), or the selection of internal test mode (TEST = 1) disables the highlight control memory. This enables normal cursor display throughout a highlight field, and in the case of test-mode selection, it permits display of the symbols associated with the highlight control codes.

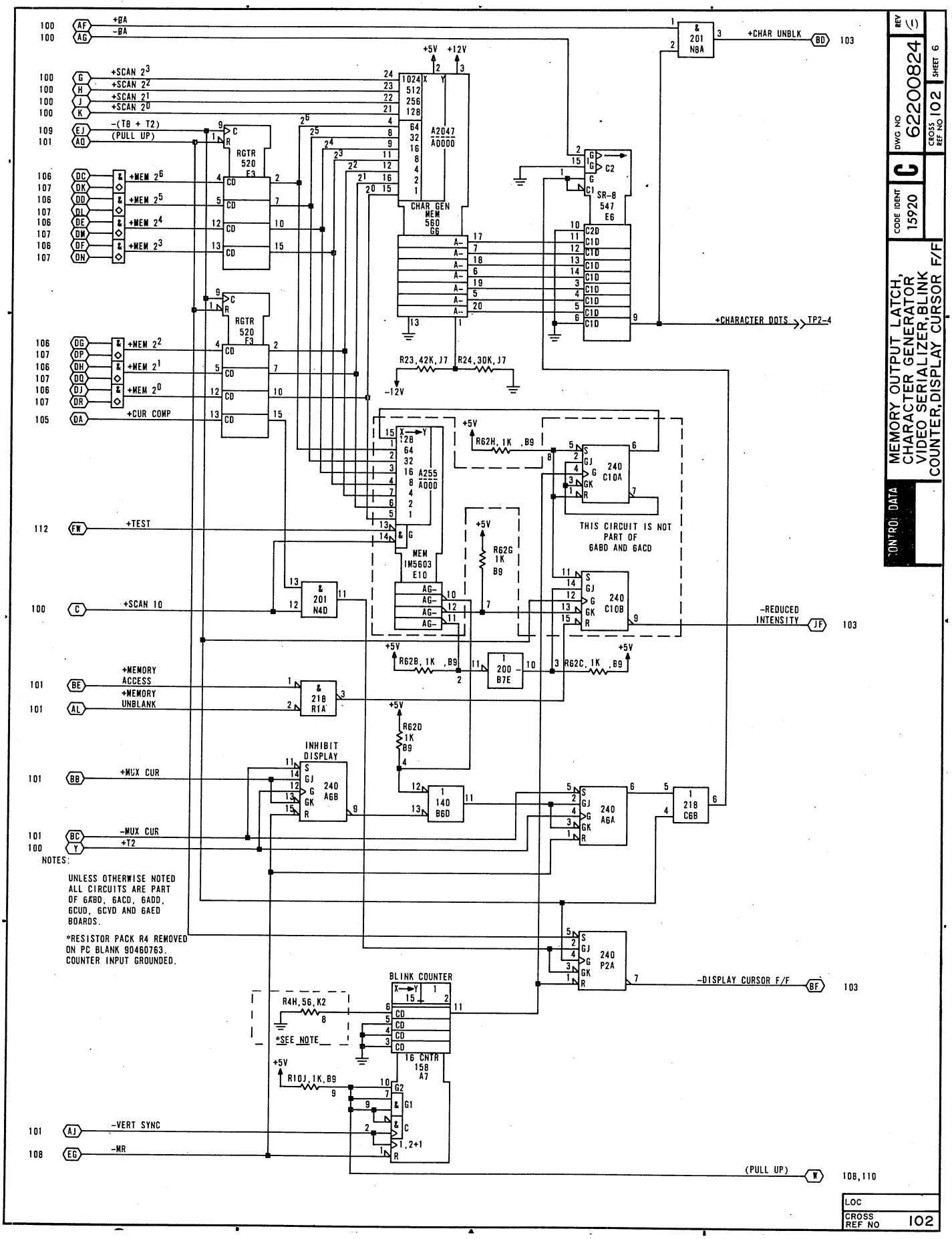
CONTROL DATA
MEMORY OUTPUT LATCH, CHARACTER GENERATOR, VIDEO SERIALIZER, BLINK COUNTER, DISPLAY CURSOR F/F
CODE IDENT 15920
DWG NO 62200824
REV C
SHEET 6
CROSS REF NO 102
+ØA
-ØA
+SCAN 2^3
+SCAN 2^2
+SCAN 2^1
+SCAN 2^0
-(T8 + T2)
(PULL UP)
+MEM 2^6
+MEM 2^5
+MEM 2^4
+MEM 2^3
+MEM 2^2
+MEM 2^1
+MEM 2^0
+CUR COMP
+TEST
+SCAN 10
+MEMORY ACCESS
+MEMORY UNBLANK
+MUX CUR
-MUX CUR
+T2
-VERT SYNC
-MR
+CHAR UNBLK
+CHARACTER DOTS
-REDUCED INTENSITY
-DISPLAY CURSOR F/F
(PULL UP)
RGTR 520 E3
CHAR GEN MEM 560 G6
SR-8 547 E6
MEM IM5603 E10
A2047 A0000
A255 A000
16 CNTR 158 A7
INHIBIT DISPLAY
BLINK COUNTER
R23,42K,J7
R24,30K,J7
R62H,1K ,B9
R62G 1K B9
R62B,1K ,B9
R62C,1K ,B9
R62D 1K B9
R4H,56,K2
*SEE NOTE
R10J,1K,B9
+5V
+12V
-12V
THIS CIRCUIT IS NOT PART OF 6ABD AND 6ACD
NOTES:
UNLESS OTHERWISE NOTED ALL CIRCUITS ARE PART OF 6ABD, 6ACD, 6ADD, 6CUD, 6CVD AND 6AED BOARDS.
*RESISTOR PACK R4 REMOVED ON PC BLANK 90460763. COUNTER INPUT GROUNDED.
LOC
CROSS REF NO 102

DIAGRAM 103

Y CURSOR COUNTER AND MUX, AND VIDEO DRIVER CIRCUIT

Diagram 103 depicts the logic for the Y cursor multiplexer (mux—G3, G2 and H2), the Y cursor counter (J2 and flip-flop R2B), and the video driver circuit (Q1/B7), near the bottom of the diagram.

Y CURSOR COUNTER AND MUX — The Y cursor counter tracks the vertical position of the cursor on the display screen. To do this, the counter can either increment or decrement its count to follow keyboard or receive codes that increment or decrement the vertical position of the cursor within the range of display lines 1 through 24 (counter counts 0 through 23). Additionally, the counter can be loaded from the Y cursor mux. This permits it to load the count of the last-line counter for the reset-to-home operation when the display is operating in scroll mode, or to load the Y position portion of X/Y positioning commands when the display is operating in page mode.

The -EN Y CUR CTR and the -LOAD CUR CTR signals from the Y cursor control memory determine whether the counter is enabled for counting (increment or decrement) or for loading from the mux. The enable and load counter signals cannot occur simultaneously, although the same clock time [+(X COMP + 1) and T3] clocks either occurrence. During enable counter operations, the state of the -INC Y signal determines whether the counter increments (-INC Y = 0) or decrements (-INC Y = 1). During enable counter operations, the Y mux becomes part of the counter when the carry from counter J2, pin 15, goes high: J2 increments at the maximum count or decrements at the minimum count. This permits flip-flop R2B to set or clear, as appropriate, when tracking the cursor position during enable counter operations.

During load counter operations, the -LOAD Y CUR CTR signal (from diagram 113) goes low to enable loading the counter, while the +PAGE/-SCROLL, -RST Y, and -Y POS signals determine what information muxes into the counter. Although the mux is a 4-input type, only three sets of inputs normally pass through the mux: the write inputs (pins 5 and 11), the last-line inputs (pins 4 and 12), and the clear cursor/set cursor and increment/decrement Y inputs (pins 6 and 10). Input pins 3 and 13 (both grounded) should not be muxed because the all-0s combination of +PAGE/-SCROLL, -RST Y and -Y POS signals necessary to mux pins 3 and 13 is illegal; that is, Y positioning commands are blocked in scroll mode (see diagram 115). The loading of write inputs from the mux into the counter is associated with Y positioning commands (-Y POS = 0), while the loading of last-line inputs is associated with reset Y and scroll mode commands (-RST Y and +PAGE/-SCROLL = 0). Other combinations of mux control inputs gate either -CLR CUR 2^{12} and +(INC Y + DEC Y) signals or -SET CUR 2^{12} and +(INC Y + DEC Y) signals from the mux to the counter. Operations like increment Y at maximum Y cause the -CLR CUR 2^{12} signal to go low, while decrement Y at minimum Y cause the -SET CUR 2^{12} signal to go low.

VIDEO DRIVER CIRCUIT — Video driver Q1 turns on momentarily as +CHAR UNBLK signals (dot pulses) enable NAND gate B5A during horizontal and vertical unblank times. The video output signal then passes to the video amplifier circuit on the video display assembly where it blanks or unblanks the electron beam as necessary to produce dot pattern characters on the crt screen. The video driver also receives Display Cursor signal inputs, via NAND gate C6A, to implement display of the cursor on the crt screen.

The -REDUCED INTENSITY signal to Q1 comes from the highlight control logic (diagram 102). It shifts the base bias of Q1 when it goes low, producing a smaller output signal from the video driver circuit. This, in turn, decreases the intensity of the characters displayed on the crt screen.

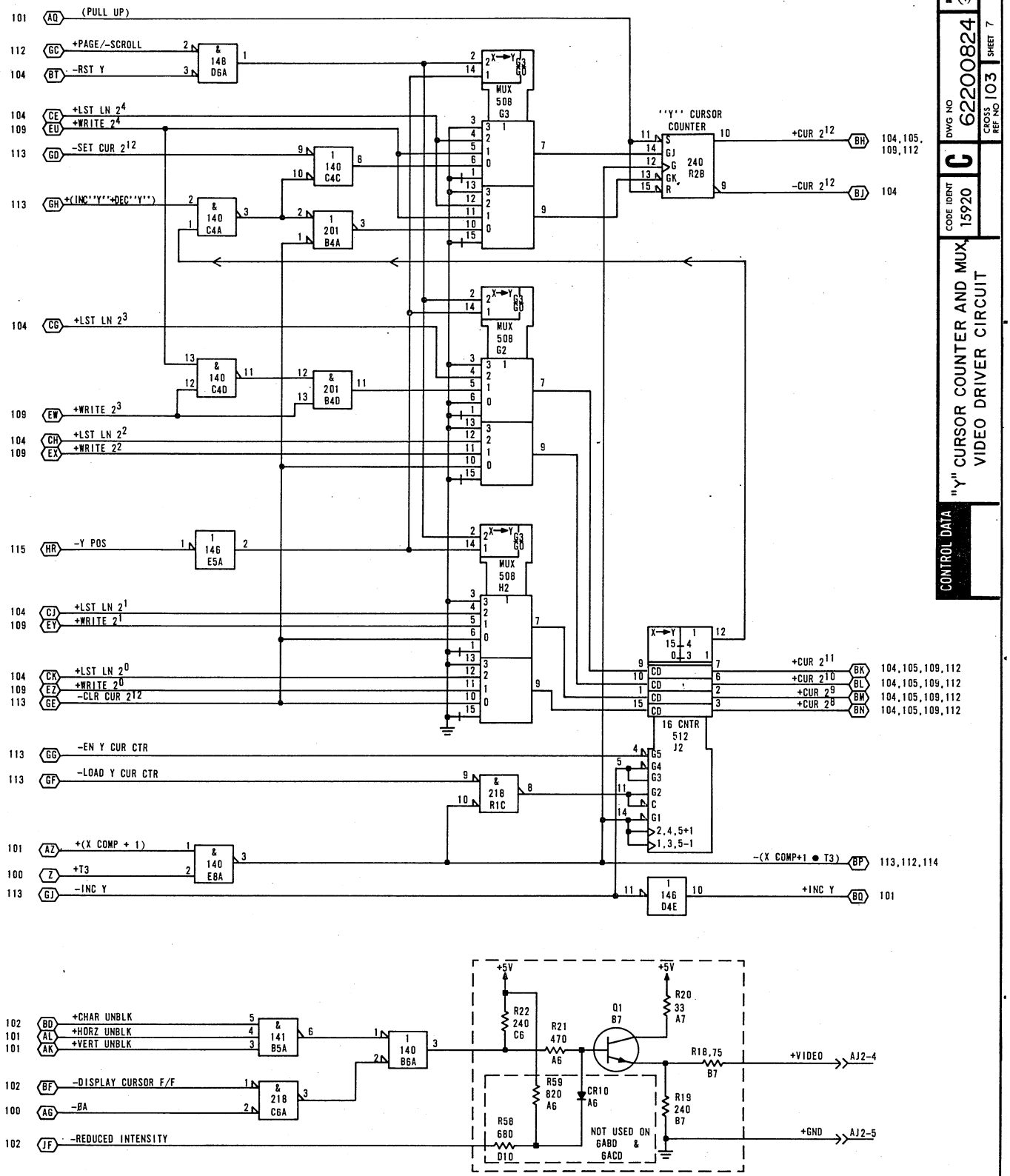

-SPARES-

ELEMENT	LOCATION	OUTPUT PIN(S)
146	E5	4
200	L10	8,10
943	N9	10
900	R4	6,8,11

UNLESS OTHERWISE NOTED ALL CIRCUITS ARE PART OF 6ABD, 6ACD, 6ADD, 6CUD, 6CVD AND 6AED BOARDS.

DIAGRAM 104

CURSOR FUNCTION DECODE, CURSOR POSITION DECODE, LAST LINE COUNTER

Diagram 104 depicts the logic for the cursor function decode circuit (memory G4), the cursor position decode circuit (coders J1 and J5, register G5 and associated gates), and the last-line counter circuit (counter H1, flip-flop R2A and associated gates).

CURSOR FUNCTION DECODE CIRCUIT — The data decode circuit on diagram 109 monitors keyboard and receive data inputs, and if it detects a display control character code, it gates the cursor function decode circuit by causing the -EN DECODE signal to go low. The cursor function decode circuit monitors 4 write bits (+WRITE 2^4 and 2^2 through 2^0) and the +EN AUTO LF signal to determine what control code is being received and what outputs to enable. Input codes to which the cursor function decode circuit responds are as follows (the auto line feed bit only affects the carriage return function):

Keys	ANSI Mnemonic	Memory Input +WRITE 2^4	2^2	2^1	2^0	Function Output
CONTROL plus G	BEL	0	1	1	1	Sound audible alarm
←	BS	0	0	0	0	Decrement X
LINE FEED	LF	0	0	1	0	Increment Y
CARRIAGE RETURN	CR	0	1	0	1	Reset X, or Reset X and increment Y if auto line feed bit is set
CONTROL plus U or →	NAK	1	1	0	1	Increment X
CONTROL plus V	SYN	1	1	1	0	Line clear
CONTROL plus X or CLEAR	CAN	1	0	0	0	Clear, reset X, and reset Y
CONTROL plus Y or RESET	EM	1	0	0	1	Reset X and reset Y
CONTROL plus Z or ↑	SUB	1	0	1	0	Decrement Y

Because there are nine function outputs possible and only eight outputs available from the cursor function decode circuit, the bell, clear, and line clear outputs require further decoding via gates N8C and M9C on this diagram and gates J10B and P8C on diagram 108.

CURSOR POSITION DECODE CIRCUIT — The cursor position decode circuit uses two BCD-to-decimal decoders (J1 and J5) to track the outputs of the X and Y cursor counters (diagrams 113 and 103). Decoding the outputs of these two counters enables monitoring of the minimum and maximum counts. Clock pulse +T7 loads the resulting -Min/-Max X/Y signals into register G5, which passes them to their respective X or Y cursor control memory circuits (diagram 113). The cursor position decode circuit also enables a +BEEP signal (audible alarm) as the cursor moves from character position 72 to character position 73 on the display screen.

LAST-LINE COUNTER CIRCUIT — The last-line counter circuit tracks the display line designated as the last line when the terminal is operating in scroll mode. A clear operation sets the Clear 1 flip-flop (diagram 108), causing the -CLR 1 signal to go low and the +CLR 1 signal to go high. These two signals load the last-line counter with a count of 23 (display line 24), which is always the display line designated as the last line when initializing the logic (power-on clear or CLEAR Key). Each time the display screen is scrolled, the -SCROLL ADD signal goes low to advance the last-line counter, and the last display line acquires a new designation (0, 1, 2 ... 23). When count 23 of the last-line counter is reached, a complete scroll cycle has occurred and gate N1B enables the counter for resetting to 0 the next time the -SCROLL ADD signal goes low. Outputs from the last-line counter circuit go to the last-line comparator circuit (diagram 112) and to the Y cursor mux and counter circuits (diagram 103).

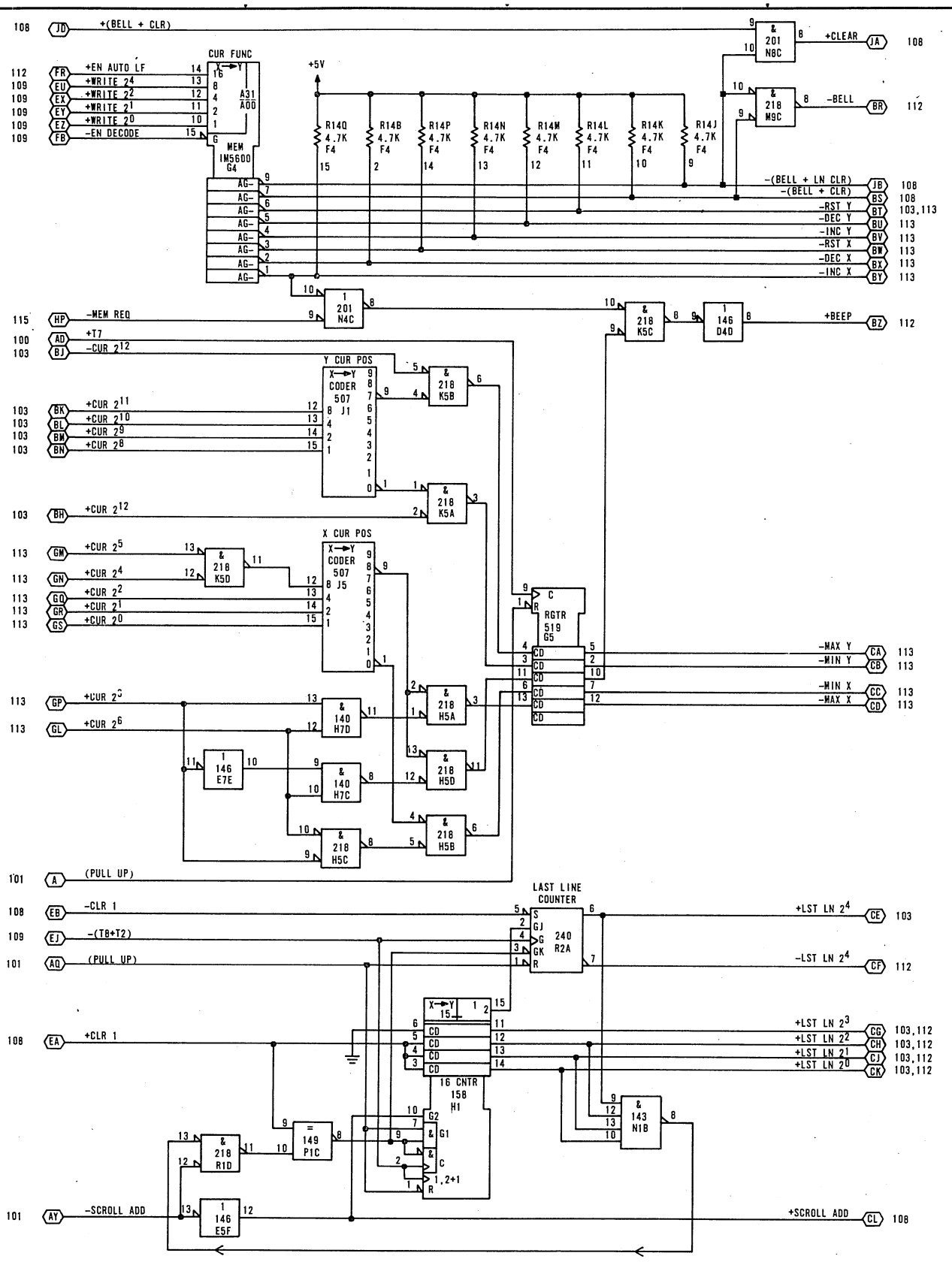

UNLESS OTHERWISE NOTED ALL CIRCUITS ARE PART OF 6ABD, 6ACD, 6ADD, 6CUD, 6CVD AND 6AED BOARDS.

CONTROL DATA

CURSOR FUNCTION DECODE, CURSOR POSITION DECODE, LAST LINE COUNTER

REV 5 | DWG NO 62200824 | SHEET 8 | CODE IDENT 15920 | C | CROSS REF NO 104

LOC | CROSS REF NO 104

DIAGRAM 105
UART, X COMPARE, CURSOR COMPARE

Diagram 105 shows the logic for the UART, the X compare, and the cursor compare circuits.

UART — The UART is a universal, asynchronous, receiver/transmitter LSI circuit. It can simultaneously receive parallel data inputs, disassemble them, and transmit them as asynchronous serial data outputs, and receive asynchronous serial data inputs, assemble them, and gate them out as parallel data words. Additionally, it can add start, parity (even or odd), and stop bits to its transmit, serial-data outputs, and can check received serial data for word format and parity errors. Following is a list of the UART pin assignments for this application.

Pins 1 through 3 provide the required power and signal ground inputs to the UART.

Pin 4 (Enbl Rcvr Rgtr) is normally low to gate outputs from Rcvr Rgtr pins 6 through 12, but goes high to block the receiver register outputs when either a word format error (framing error indicated by missing stop bit) or a parity error occurs in a received word.

Pins 6 through 12 (Rcvr Rgtr) are the receiver register output pins; they pass received words to the write-memory multiplexer and data-decode circuits (diagram 109).

Pin 13 (Parity Err) goes high to indicate a parity error in a received data word.

Pin 14 (Frame Err) goes high to indicate a framing error (format error) if a received word does not end with a stop bit (mark or logical 1 bit).

Pin 16 (Enbl Status Rgtrs) is tied low to enable status outputs from pins 13, 14, 19, and 22 (parity error, framing error, receiver register full, and transmit holding register empty).

Pin 17 (Rcvr Clk $\div$ 16) accepts a receive clock signal that is 16 times the actual bit rate of received data inputs.

Pin 18 (Reset Rcvr Rgtr Full) goes low to reset pin 19 (Rcvr Rgtr Full) when the receive register is not full; pin 19 goes high when the receive register is full.

Pin 20 (Ser Rcvr Data) receives serial data inputs; reception starts with a high-to-low (marking to spacing) transition on this line.

Pin 21 (Reset) goes high to reset the UART when a master reset occurs.

Pin 22 (Bfr Rgtr Empty) goes high when transmit holding register is empty.

Pin 23 (Load Bfr Rgtr) goes low to load data on pins 26 through 33 into the UART transmit buffer register.

Pin 24 (Xmtr Shf-Rgtr Empty) goes high to indicate transmit shift register is empty.

Pin 25 (Ser Xmtr Data) is the output pin for serial transmit data; it is high when no data is being transmitted and shifts low (start bit) to indicate the start of transmission.

Pins 26 through 33 receive parallel data inputs from the keyboard (7 bits) and the mark or space select bit, which is active when even or odd parity bit generation is not selected.

Pin 34 (Load Mode Rgtr) is tied high to permit addition of control and parity bits to the parallel, transmit data inputs.

Pin 35 (Enbl Parity) is low to enable parity bit generation and checking, and is high to disable these functions.

Pin 36 (Sel Stop Bit) goes high when the display terminal is operating at 110 baud transmission rate to enable two stop bits to be added to transmitted words; it is low to enable only one stop bit at all other baud rates.

Pins 37 and 38 (Sel Wd Lg) are connected so as to enable eight data bits per transmitted word when no parity is selected (see pin 33, preceding) or to enable seven data bits and a parity bit per transmitted word when parity check/generation is enabled (see pin 35, preceding).

Pin 39 (Sel Parity Even/Odd) is high to select even parity checking and generation when these functions are enabled (see pin 35, preceding), and low to select odd parity checking and generation.

Pin 40 (Xmtr Clk) receives a clock signal that is 16 times the actual bit rate of transmitted data (see also pin 17, preceding).

X COMPARE — The X compare circuit issues a +X COMP signal when the counts of the horizontal counter (diagram 100) and the X cursor counter (diagram 113) are equal to one another. This equality indicates that the horizontal position of the electron beam as it sweeps the crt screen matches the horizontal location of the cursor on the crt screen.

CURSOR COMPARE — The cursor compare circuit consists of the X compare circuit described preceding and of a circuit that issues a +CURSOR COMP signal when the counts of the vertical address counter (diagram 101) and the Y cursor counter (diagram 103) are equal to one another. The +X COMP signal ANDs with the +CURSOR COMP signal to produce a +CUR COMP signal each time the crt beam sweeps the actual position of the character immediately at the cursor position on the display screen.

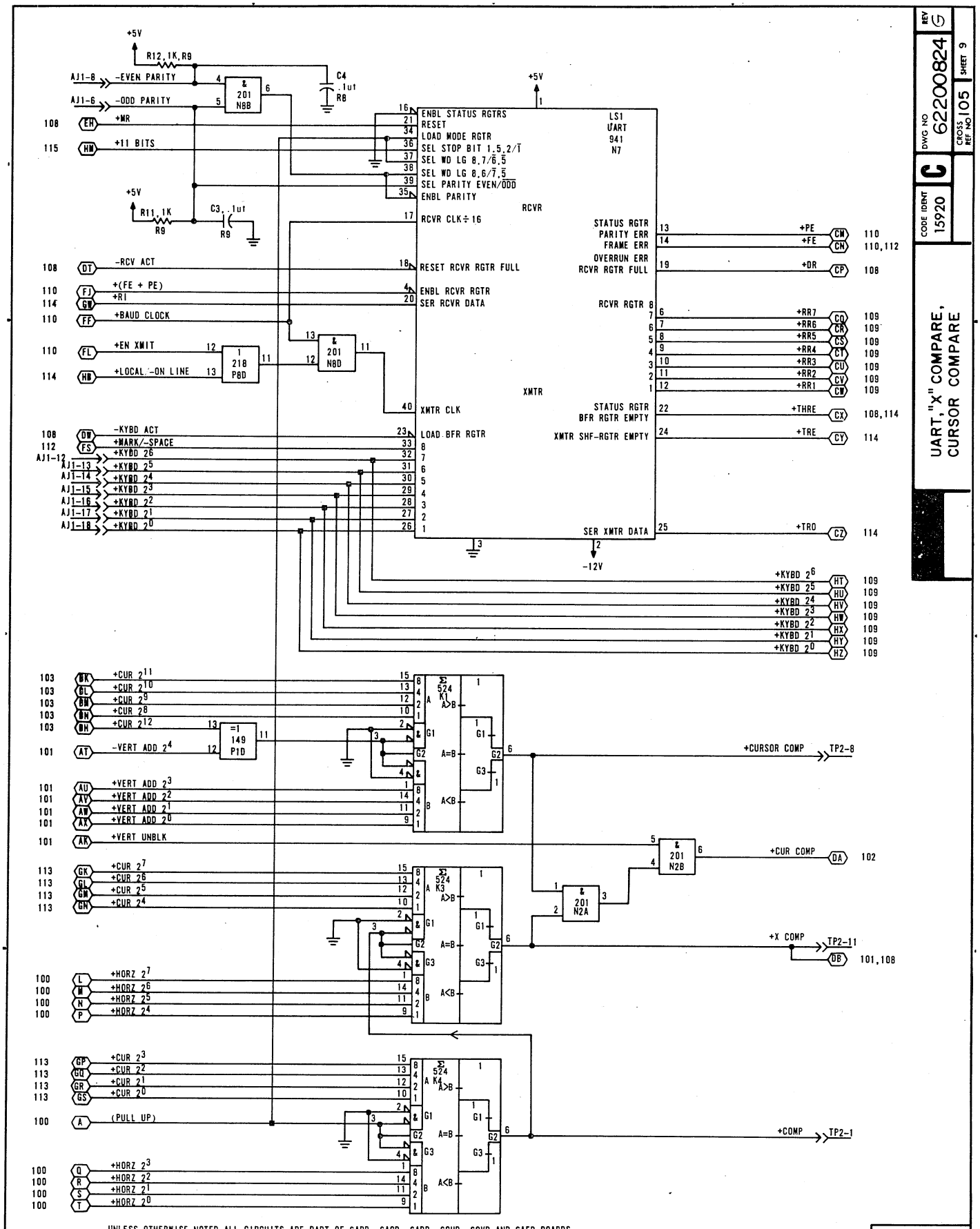
UART, "X" COMPARE, CURSOR COMPARE
DWG NO 62200824
REV G
SHEET 9
CODE IDENT 15920
C
CROSS REF NO 105
LS1 UART 941 N7
ENBL STATUS RGTRS
RESET
LOAD MODE RGTR
SEL STOP BIT 1.5,2/1
SEL WD LG 8,7/6,5
SEL WD LG 8,6/7,5
SEL PARITY EVEN/ODD
ENBL PARITY
RCVR
RCVR CLK÷16
RESET RCVR RGTR FULL
ENBL RCVR RGTR
SER RCVR DATA
XMTR
XMTR CLK
LOAD BFR RGTR
SER XMTR DATA
STATUS RGTR
PARITY ERR
FRAME ERR
OVERRUN ERR
RCVR RGTR FULL
RCVR RGTR 8
STATUS RGTR
BFR RGTR EMPTY
XMTR SHF-RGTR EMPTY
+5V
-12V
-EVEN PARITY
-ODD PARITY
+MR
+11 BITS
-RCV ACT
+(FE + PE)
+RI
+BAUD CLOCK
+EN XMIT
+LOCAL/-ON LINE
-KYBD ACT
+MARK/-SPACE
+KYBD 2^6
+KYBD 2^5
+KYBD 2^4
+KYBD 2^3
+KYBD 2^2
+KYBD 2^1
+KYBD 2^0
+CUR 2^11
+CUR 2^10
+CUR 2^9
+CUR 2^8
+CUR 2^12
-VERT ADD 2^4
+VERT ADD 2^3
+VERT ADD 2^2
+VERT ADD 2^1
+VERT ADD 2^0
+VERT UNBLK
+CUR 2^7
+CUR 2^6
+CUR 2^5
+CUR 2^4
+HORZ 2^7
+HORZ 2^6
+HORZ 2^5
+HORZ 2^4
+CUR 2^3
+CUR 2^2
+CUR 2^1
+CUR 2^0
(PULL UP)
+HORZ 2^3
+HORZ 2^2
+HORZ 2^1
+HORZ 2^0
+PE
+FE
+DR
+RR7
+RR6
+RR5
+RR4
+RR3
+RR2
+RR1
+THRE
+TRE
+TRO
+CURSOR COMP
+CUR COMP
+X COMP
+COMP
TP2-8
TP2-11
TP2-1
UNLESS OTHERWISE NOTED ALL CIRCUITS ARE PART OF 6ABD, 6ACD, 6ADD, 6CUD, 6CVD AND 6AED BOARDS.
LOC
CROSS REF NO 105

DIAGRAMS 106 AND 107
MEMORY BANK A AND MEMORY BANK B

Memory bank A and B each consist of seven 1024- by 1-bit random-access, read/write memory circuits connected in parallel to produce a 1024- by 7-bit memory. The two banks therefore have a capacity of 2048 seven-bit words. Both banks use common address, read/write select (+READ/-WRITE), and write-data (+WRITE 2^6 through 2^0) signal input lines. Each bank, however, uses a separate bank select signal (A = +HORZ 2^0 and B = -HORZ 2^0) and separate read data lines (+MEM 2^6 through 2^0), which are ORed into the 7-bit, memory output latch register (diagram 102).

The common address bits to each bank simultaneously address the same memory locations; however, the bank select signals alternately enable each memory bank so that bank A receives (write) or furnishes (read) all even characters (0, 2, 4, . . . 78) and bank B receives or furnishes all odd characters (1, 3, 5, . . . 79) in a display line.

The combination of horizontal counter signals (diagram 100) and address signals from the memory address converter (diagram 109) enables binary addressing of 960 of the 1024 possible memory locations in each memory bank. The two banks, therefore, provide a total of 1920 seven-bit memory locations that corresponds with the 1920-character capacity of the display screen (24 lines of 80 characters per line).

Reading or writing from or into memory is determined by the state of the +READ/-WRITE signal line from the read/write control circuit (diagram 101). When the read/write signal line is high, the memory is enabled for reading information, and when the read/write signal line is low, the memory is enabled for receiving write information. The read/write signal line is normally high and only goes low when a write operation (keyboard entries or receive information) occurs.

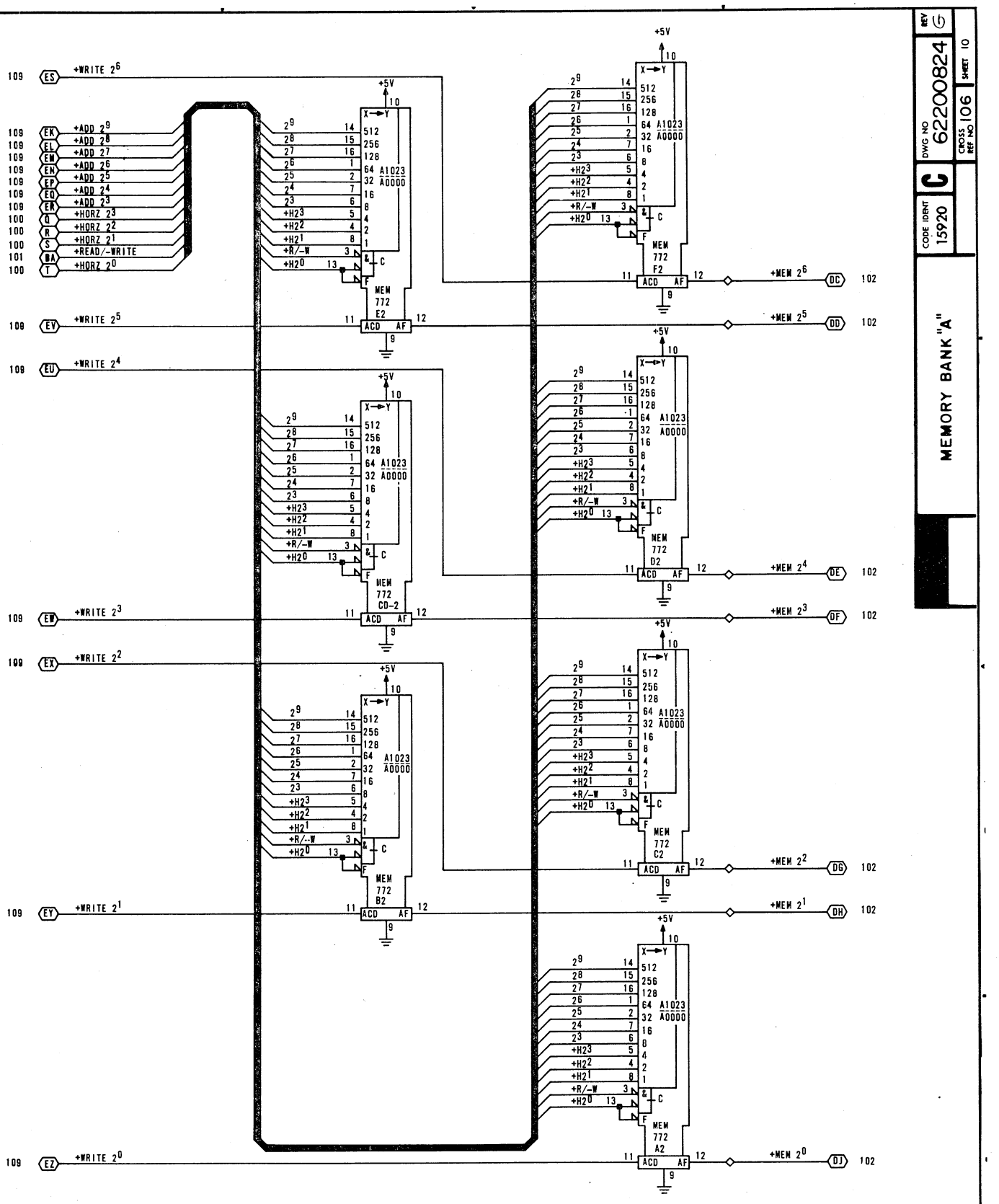
MEMORY BANK "A"
DWG NO 62200824
REV D
SHEET 10
CROSS REF NO 106
CODE IDENT 15920
C
+WRITE 2^6
+WRITE 2^5
+WRITE 2^4
+WRITE 2^3
+WRITE 2^2
+WRITE 2^1
+WRITE 2^0
+ADD 2^9
+ADD 2^8
+ADD 2^7
+ADD 2^6
+ADD 2^5
+ADD 2^4
+ADD 2^3
+HORZ 2^3
+HORZ 2^2
+HORZ 2^1
+HORZ 2^0
+READ/-WRITE
+MEM 2^6
+MEM 2^5
+MEM 2^4
+MEM 2^3
+MEM 2^2
+MEM 2^1
+MEM 2^0
MEM 772 E2
MEM 772 D2
MEM 772 C2
MEM 772 B2
MEM 772 A2
MEM 772 F2
MEM 772 CD-2
A1023 A0000
+5V
ACD
AF
UNLESS OTHERWISE NOTED ALL CIRCUITS ARE PART OF 6ABD, 6CUD, 6ACD, 6CVD, 6ADD AND 6AED BOARDS.
LOC
CROSS REF NO 106

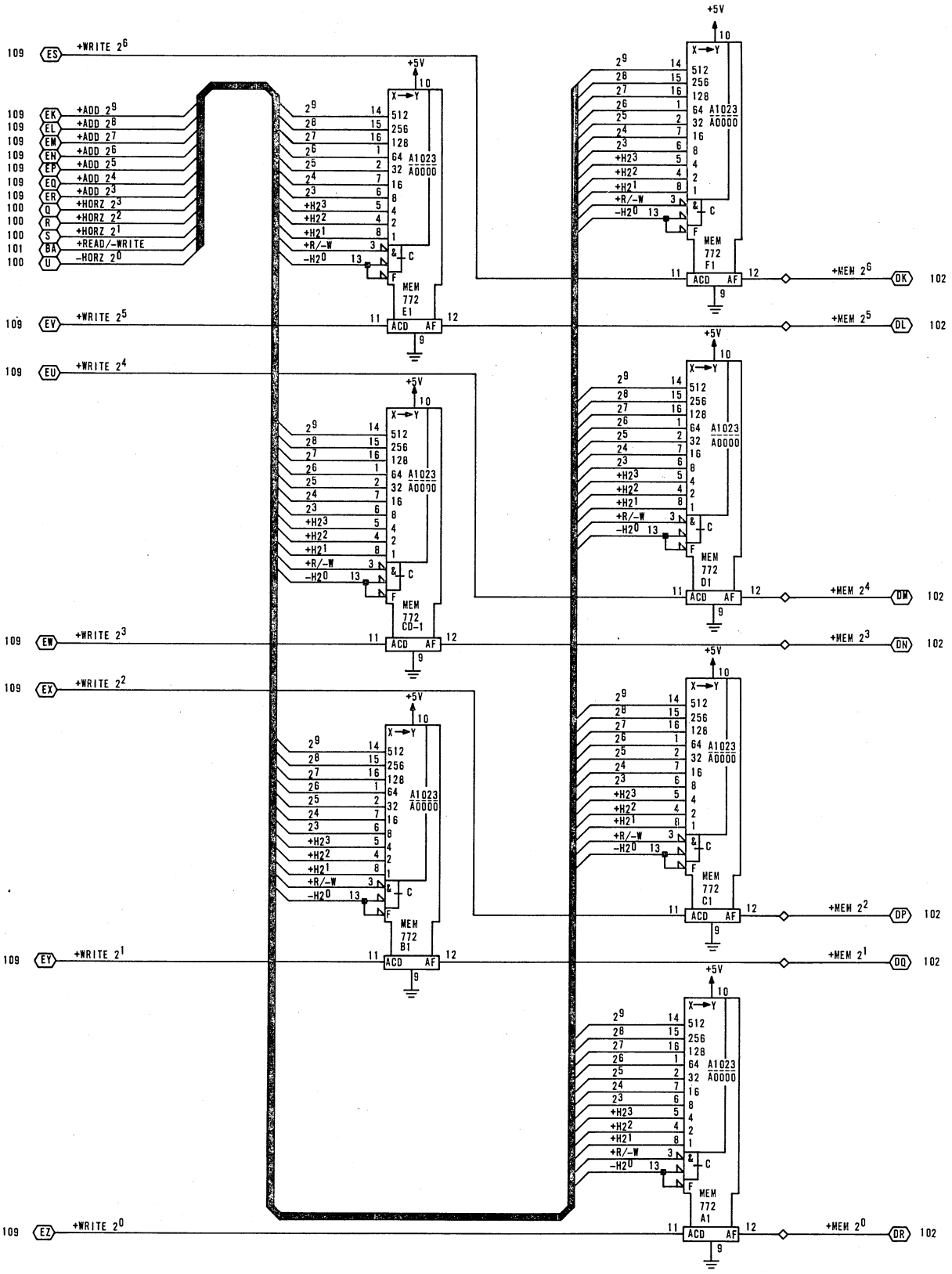

UNLESS OTHERWISE NOTED ALL CIRCUITS ARE PART OF A 6ABD, 6ACD, 6ADD, 6CUD, 6CVD AND 6AED BOARDS.

LOC
CROSS REF NO 107

DIAGRAM 108
CLEAR CONTROL, RECEIVE, AND KEYBOARD CONTROL

The upper third of this diagram shows the receive and keyboard control logic; the middle third shows the clear control logic, and the lower third shows the power-on reset logic.

RECEIVE AND KEYBOARD CONTROL LOGIC — The receive and keyboard control logic consists of flip-flops G8A (receive active), H9B (strobe) and H9A (keyboard active), and of the gates associated with these flip-flops. The following text describes how these flip-flops interact to enable gating of receive data or keyboard data inputs.

The Receive Active flip-flop, direct sets via G8A-1 as the display terminal is powered up. It then clears at time T4 of the +(X COMP + 1) pulse. At time T4, any time that there is receive data ready (+DR = 1), and there is neither a clear 1 nor a scroll clear in progress (K9B and J9B are both clear), and it is neither an +X COMP nor +(X COMP + 1) time, the Receive Active flip-flop sets. As it sets, the resulting +RCV ACT and -RCV ACT signals go to various portions of the control logic to enable checking of the received character to determine what action the display terminal is to take: for example, either store a character in memory or perform a control action. The -RCV ACT signal resets the +DR signal from the UART, enabling the UART for reception of the next receive character. The -RCV ACT signal also disables NAND gate G9B.

NAND gate G9B is the control gate for the Keyboard Active flip-flop. The Keyboard Active flip-flop is enabled for setting on the next T5 clock pulse when: 1) the Receive Active flip-flop is clear, 2) the transmit holding register of the UART is empty (+THRE = 1), 3) the scan timing indicates that neither an +X COMP nor +(X COMP + 1) is occurring, 4) flip-flops K9B and J9B are clear to indicate that neither a clear 1 nor a scroll clear is occurring, and 5) the Strobe flip-flop (H9B) sets to indicate keyboard data is awaiting loading into the UART. Notice that the timing of the Receive Active and Keyboard Active flip-flops gives the Receive Active flip-flop priority by virtue of its earlier clock pulse (T4 versus T5). As the Keyboard Active flip-flop sets, it distributes +KYBD ACT and -KYBD ACT signals to various portions of the logic to enable loading and checking of the keyed-in character to determine what action the display terminal is to take: for example, transmit and control, transmit and display, or transmit only.

CLEAR CONTROL LOGIC — Clear control logic consists of Line Clear flip-flop J9A, Clear flip-flop K9A, Scroll Clear flip-flop J9B, Clear 1 flip-flop K9B, and the gates associated with these flip-flops. These four flip-flops provide control for three functions of the display terminal: 1) a clear operation, 2) a line clear operation, and 3) a scroll clear operation.

A clear operation occurs as the result of either a received or keyboard input clear command, as decoded by the cursor function decode circuit (diagram 104). The resulting +CLR signal enables Clear 1 flip-flop K9B to set as the next T1 clock pulse occurs. +CLR 1 then enables Clear flip-flop K9A for setting on the next -VERT SYNC pulse. When the Clear flip-flop sets, its +CLR ACT signal inhibits the data decode mux (diagram 109), while its -CLR SET signal resets the vertical address counter and sets the Read/Write Control flip-flop to enable muxing the new cursor position into memory (diagram 101). The Clear flip-flop remains set until the next -VERT SYNC pulse toggles it clear; as it resets, it completes the clear operation by toggling the Clear 1 flip-flop clear.

A line clear operation also occurs as the result of a keyboard input or a received command. In this case, the cursor function decode circuit causes the -(BELL + CLR) signal to go high while the -(BELL + LN CLR) signal goes low. These signals gate Line Clear flip-flop J9A for setting on the next T2 clock signal. When the line clear flip-flop sets, its outputs enable the clearing of refresh memory from the current cursor location to the end of the associated display line without moving the cursor position. The line clear flip-flop resets on the next -HORZ SYNC pulse to terminate the line clear operation at the end of the display line in which the operation began.

A scroll clear operation is similar to a line clear operation with the exception that it only occurs during scroll mode operation of the display. When the display is scrolled, the +SCROLL ADD signal enables the Scroll Clear flip-flop for setting at the next T1 clock pulse. The Scroll Clear flip-flop, in turn, enables the line clear flip-flop for setting on the next -HORZ SYNC pulse. This approach ensures that the display line moving into the last-line position (scroll position or 24th line of screen) is clear. The Line Clear flip-flop clears on the second -HORZ SYNC pulse following initiation of the scroll clear operation and terminates the operation by enabling the Scroll Clear flip-flop for clearing.

Notice that both the scroll clear and the clear operations (Clear 1 set) inhibit either keyboard or receive functions from occurring until the clear operation is complete. This is because the duration of these operations is such that timing conflicts could occur.

DIAGRAM 108 (CONTD)

POWER-ON RESET LOGIC — The power-on reset logic consists of flip-flops C7A and C7B. Power-on Reset flip-flop C7B is normally clear as display terminal power comes on. When clear, C7B resets the horizontal and vertical counters (diagrams 100 and 101) and sets the Master Reset flip-flop (C7A), which clears the remainder of terminal logic. After display terminal power has been on a short time, capacitor C10 charges through resistor R27 and enables flip-flop C7B for setting, which it does on the next +ØA clock transition. C7B then remains set as long as the +5-V dc logic power remains on. As C7B sets and the -PWR RST signal goes high, it enables Master Reset flip-flop C7A for clearing, which it does on the next +T0 clock transition. The power-on clear operation is then complete, and all logic circuits are initialized for operation.

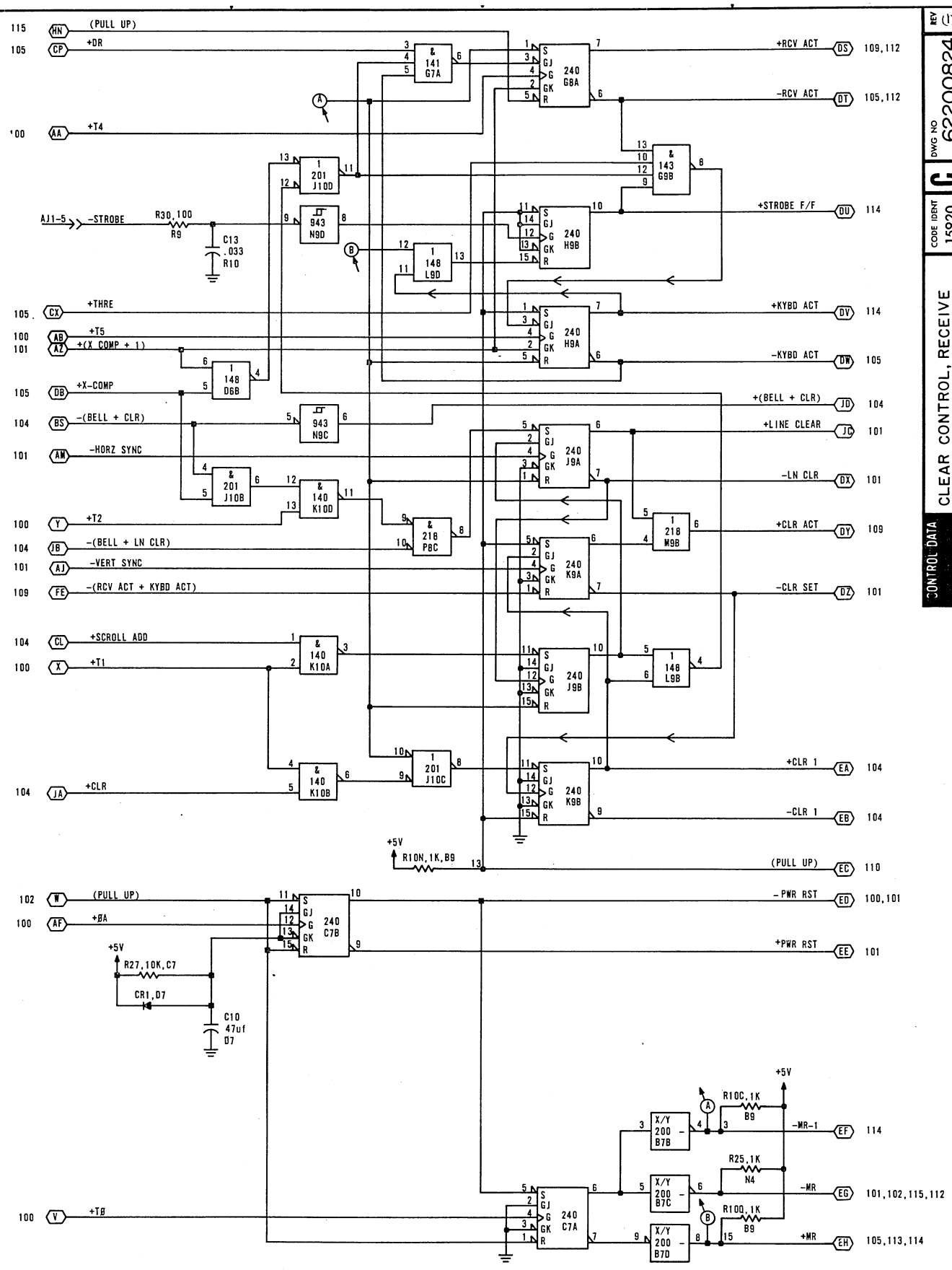

UNLESS OTHERWISE NOTED ALL CIRCUITS ARE PART OF 6ABD, 6ACD, 6ADD, 6CUD, 6CVD AND 6AED BOARDS.

LOC
CROSS REF NO 108

DIAGRAM 109
MEMORY ADDRESS CONVERSION, DATA DECODE

Diagram 109 depicts the logic for the memory address conversion circuit (multiplexers C3 and D3, and ROMs B3 and A3), and it also shows the data decode logic circuit (multiplexers K7 and J7, and ROM J8).

MEMORY ADDRESS CONVERSION CIRCUIT — The memory address conversion circuit provides the upper seven bits of address for the refresh memory of the display terminal (bank A and B, diagram 106 and 107). The conversion is necessary to provide sequential binary addressing of refresh memory from the BCD outputs of the horizontal and vertical address (or Y cursor) counters (diagrams 100, 101 and 103). The +HORZ 2^6 through 2^4 signals from the horizontal counter feed directly into the ROM converters, whereas multiplexing is necessary to determine whether the +VERT ADD 2^4 through 2^0 or the +CUR 2^{12} through 2^8 signals pass into the ROM converters. The vertical address and +T8 clock signals are multiplexed during refresh (read memory) operations, while the Y cursor counter and +T2 clock signals are multiplexed during write memory (receive data or keyboard input) or other cursor movement operations (+MUX CUR = 1).

DATA DECODE LOGIC CIRCUIT — Data decode ROM J8 monitors the output of write data multiplexer K7/J7 to determine whether:

1) The write character is a valid display character — -VALID CHAR signal goes low.

2) The write character is one calling for cursor movement, a bell signal, a clear operation or a line clear operation — -EN DECODE signal goes low.

3) The write character is one that calls for the request to send signal to be cleared — -CLR RTS signal goes low. The carriage return (015_8), the end of text (003_8), the end of transmission (004_8), and line feed (012_8) codes cause the -CLR RTS signal to go low.

4) The write character(s) are requesting a cursor positioning operation — -(ESC + 061_8) signal goes low.

The -VALID CHAR signal makes a gate (diagram 115) that enables loading the write characters into refresh memory. The -EN DECODE signal enables the cursor function decode ROM (diagram 104), which in turn examines the write character for its significance. The -CLR RTS signal goes to the modem interface logic (diagram 114) to enable dropping the request to send signal if the terminal is operating in half duplex and switched RTS modes. The -(ESC + 061_8) signal goes to the X/Y position control logic (diagram 115) to enable it for X/Y cursor positioning operations; the escape and 061_8 codes must occur one after the other, in sequence, to enable the X/Y positioning circuits.

The write data multiplexer muxes either keyboard (+KYBD ACT = 1) or receive data (+KYBD ACT = 0) inputs onto the write data lines and into the data decode ROM. Selecting internal test mode of the display terminal (+TEST = 1) conditions the ROM so that input control functions are not performed (-EN DECODE remains high) and so that all characters are displayed (-VALID CHAR goes low for each write input). When the +(PE + RCV BRK + TEST) signal line is high and is muxed into the data decode ROM with the write data, the -VALID CHAR signal goes low to enable a character display but the actual display depends on the particular signal causing the +(PE + RCV BRK + TEST) signal to be high: a parity-error symbol (▮) displays if either the + PE or the +RCV BRK signal is the cause, or the symbol associated with the write code displays if the +TEST signal is the cause.

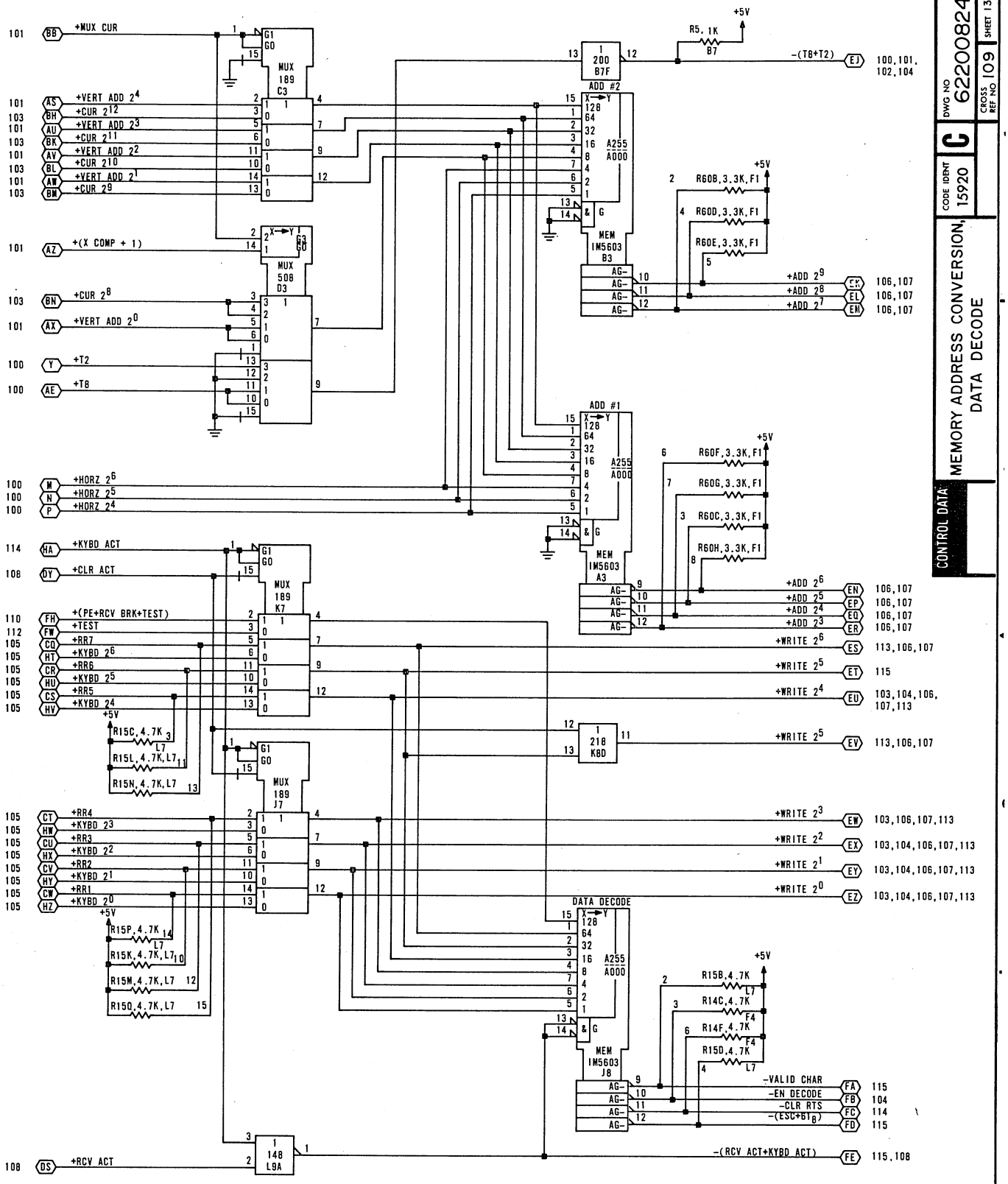
MEMORY ADDRESS CONVERSION, DATA DECODE
CONTROL DATA
REV
DWG NO 62200824
CROSS REF NO 109
SHEET 13
CODE IDENT 15920
C
+MUX CUR
+VERT ADD 2^4
+CUR 2^12
+VERT ADD 2^3
+CUR 2^11
+VERT ADD 2^2
+CUR 2^10
+VERT ADD 2^1
+CUR 2^9
+(X COMP + 1)
+CUR 2^8
+VERT ADD 2^0
+T2
+T8
+HORZ 2^6
+HORZ 2^5
+HORZ 2^4
+KYBD ACT
+CLR ACT
+(PE+RCV BRK+TEST)
+TEST
+RR7
+KYBD 2^6
+RR6
+KYBD 2^5
+RR5
+KYBD 2^4
+RR4
+KYBD 2^3
+RR3
+KYBD 2^2
+RR2
+KYBD 2^1
+RR1
+KYBD 2^0
+RCV ACT
MUX 189 C3
MUX 508 D3
MUX 189 K7
MUX 189 J7
ADD #2
ADD #1
DATA DECODE
MEM IM5603 B3
MEM IM5603 A3
MEM IM5603 J8
1 200 B7F
1 218 K8D
1 148 L9A
R5, 1K B7
R60B,3.3K,F1
R60D,3.3K,F1
R60E,3.3K,F1
R60F,3.3K,F1
R60G,3.3K,F1
R60C,3.3K,F1
R60H,3.3K,F1
R15C,4.7K L7
R15L,4.7K,L7
R15N,4.7K,L7
R15P,4.7K L7
R15K,4.7K,L7
R15M,4.7K,L7
R15Q,4.7K,L7
R15B,4.7K L7
R14C,4.7K F4
R14F,4.7K F4
R15D,4.7K L7
+5V
-(T8+T2)
+ADD 2^9
+ADD 2^8
+ADD 2^7
+ADD 2^6
+ADD 2^5
+ADD 2^4
+ADD 2^3
+WRITE 2^6
+WRITE 2^5
+WRITE 2^4
+WRITE 2^3
+WRITE 2^2
+WRITE 2^1
+WRITE 2^0
-VALID CHAR
-EN DECODE
-CLR RTS
-(ESC+BT)
-(RCV ACT+KYBD ACT)
UNLESS OTHERWISE NOTED ALL CIRCUITS ARE PART OF 6ABD, 6ACD, 6ADD, 6CUD, 6CVD AND 6AED BOARDS.
LOC
CROSS REF NO 109

DIAGRAM 110
BAUD COUNTER, MODEM CONTROL

Diagram 110 depicts the logic for the baud counter (counters E9, D9 and E10, flip-flop F8A, and oscillator D8) near the top of the diagram, and it shows the modem control logic (ROM L8) near the bottom.

BAUD COUNTER — The baud counter receives a 6.745-MHz clock signal from oscillator D8 and load inputs +BIT 8 through +BIT 1 from the Baud Select switches (diagram 115) to enable selection of one of the following transmit/receive baud rates: 110, 150, 200, 300, 600, 1200, 1800, 2400, 4800, or 9600. The transmit/receive circuits of the UART divide the input transmit/receive clock frequencies by 16 to obtain the desired baud rate. In addition, flip-flop F8A at the output of the counter circuit provides a constant divide-by-two factor. The following tabular listing shows the relationship between the desired transmit/receive baud rate and the preload input to the baud counter.

Baud Rate	Clock Hertz to UART (Output of F8A)	Clock Hertz from Counter (Output of E7D)	Counter ÷	Counter Preload (E9 and D9) B8	B7	B6	B5	B4	B3	B2	B1
110	1760	3520	1936	0	1	0	1	0	0	0	0
150	2400	4800	1408	1	0	0	0	0	0	0	0
200	3200	6400	1056	1	0	1	0	0	0	0	0
300	4800	9600	704	1	1	0	0	0	0	0	0
600	9600	19,200	352	1	1	1	0	0	0	0	0
1200	19,200	38,400	176	1	1	1	1	0	0	0	0
1800	28,800	57,600	117	1	1	1	1	0	0	1	1
2400	38,400	76,800	88	1	1	1	1	1	0	0	0
4800	76,800	153,600	44	1	1	1	1	1	1	0	0
9600	153,600	307,200	22	1	1	1	1	1	1	1	0

Only the preload values for counters E9 and D9 are included in the listing because the preload for counter D10 is normally fixed at 0101, except at 1800 baud. At 1800 baud, the preload for counter D10 is 0111.

MODEM CONTROL LOGIC — Just above the modem control ROM, the +TEST, +FE (format error) and +PE (parity error) signals pass through OR gates P8A and P8B to produce a +(PE + RCV BRK + TEST) signal and a +(FE + PE) signal. The parity error, receive break or test signal goes to the data decode mux and memory (diagram 109) to enable loading, decoding and display of the appropriate symbol: parity error or receive break = error symbol (■), and test mode provides display of all symbols but no control functions. The format error or parity error signal goes to the UART (diagram 105) to block loading of an erroneous code in memory and attempting to decode it.

Modem control ROM L8 receives input signals from the modem interface logic (diagram 114) and provides modem control output signals to the logic circuits within the display terminal. As examples, the data set ready (-DSR) and data terminal ready (-DTR) signals into the ROM cause an enable request to send (-EN RTS) signal out of the ROM, and the carrier on (-CO) signal into the ROM enables the -CO LIGHT signal out of the ROM. Selection of current loop mode of display terminal operation (+EN CUR LOOP = 1) forces all of the ROM outputs high inhibiting the modem control signals that are not necessary for current loop mode operation. The +EN XMIT and +EN RCV signals remain high in current loop mode.

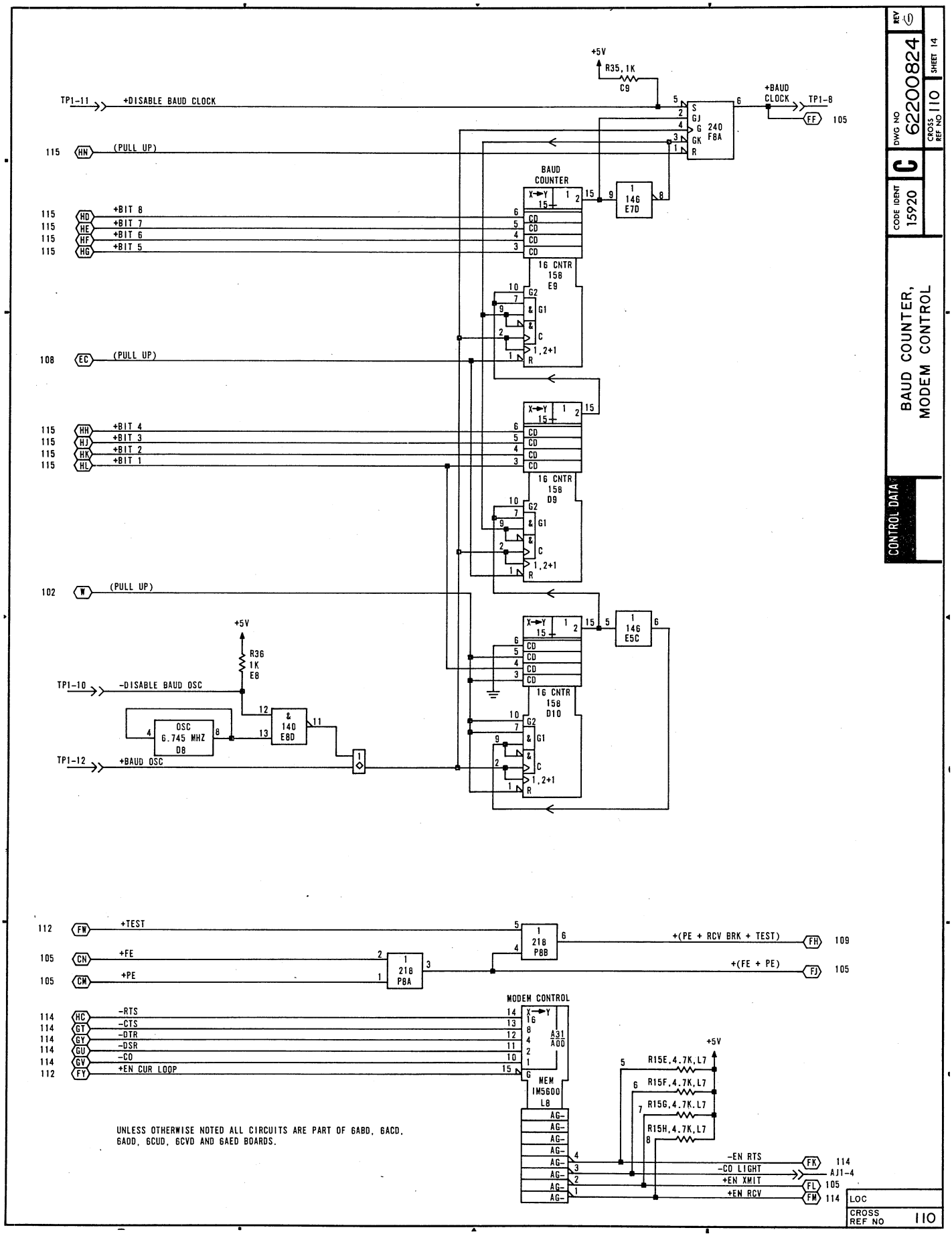
+5V
R35, 1K
C9
TP1-11
+DISABLE BAUD CLOCK
+BAUD CLOCK
TP1-8
FF
105
115
HN
(PULL UP)
BAUD COUNTER
240
F8A
146
E7D
115
HD
+BIT 8
115
HE
+BIT 7
115
HF
+BIT 6
115
HG
+BIT 5
16 CNTR
158
E9
108
EC
(PULL UP)
115
HH
+BIT 4
115
HJ
+BIT 3
115
HK
+BIT 2
115
HL
+BIT 1
16 CNTR
158
D9
102
W
(PULL UP)
+5V
R36
1K
E8
TP1-10
-DISABLE BAUD OSC
OSC
6.745 MHZ
D8
&
140
E8D
TP1-12
+BAUD OSC
146
E5C
16 CNTR
158
D10
112
FW
+TEST
218
P8B
+(PE + RCV BRK + TEST)
FH
109
105
CN
+FE
105
CM
+PE
218
P8A
+(FE + PE)
FJ
105
MODEM CONTROL
114
HC
-RTS
114
GT
-CTS
114
GY
-DTR
114
GU
-DSR
114
GV
-CO
112
FY
+EN CUR LOOP
A31
A00
MEM
IM5600
L8
+5V
R15E, 4.7K, L7
R15F, 4.7K, L7
R15G, 4.7K, L7
R15H, 4.7K, L7
-EN RTS
FK
114
-CO LIGHT
AJ1-4
+EN XMIT
FL
105
+EN RCV
FM
114
UNLESS OTHERWISE NOTED ALL CIRCUITS ARE PART OF 6ABD, 6ACD, 6ADD, 6CUD, 6CVD AND 6AED BOARDS.
REV
DWG NO 62200824
SHEET 14
CROSS REF NO 110
CODE IDENT 15920
C
BAUD COUNTER, MODEM CONTROL
CONTROL DATA
LOC
CROSS REF NO 110

DIAGRAM 111
PHASE LOCK OSCILLATOR, CURRENT LOOP RECEIVE AND TRANSMIT

Diagram 111 shows the phase lock and the current loop transmit/receive circuits of the display terminal.

PHASE LOCK CIRCUIT — Phase lock circuit P9 synchronizes the vertical sync pulse of the vertical control circuit (diagram 101) with the frequency of the ac input power. The phase-shift detector portion of P9 receives its reference input via N9B-4 and compares it with the -VERT SYNC signal. If the -VERT SYNC signal lags the reference signal, output pin 13 of P9 goes high while pin 2 goes low. These outputs feed around and into the charge pump section of P9 on pins 4 and 11 causing output pin 5 to go high while output pin 10 goes low. As a result, Q3 conducts less, P9-8 goes high increasing the voltage input to voltage-controlled multivibrator M2, and the multivibrator speeds up. If the -VERT SYNC signal leads the reference signal, output pin 13 of P9 goes low while pin 2 goes high. The charge pump outputs then reverse; pin 5 goes low and 10 goes high causing Q3 to increase conduction. The amplifier portion of P9, in turn, conducts more causing pin 8 of P9 to go low. Voltage input to the voltage-controller multivibrator decreases, and the multivibrator decreases its speed until it matches that of the reference signal. The phase lock circuit uses power from its own +5-V dc regulator, which in turn uses the +12-V dc as a power source.

CURRENT LOOP TRANSMIT AND RECEIVE CIRCUITS — Current loop circuits are present only on display terminals having that option installed; however, all display terminals have the jumper connectors installed for conditioning the display terminal for use on either a current loop or voltage level communication interface. When used on a voltage level interface, the following jumper connections are used in the display terminal: A to B, L to M, G to E and K to H. Full-duplex current loop operation of the display terminal requires the following connections: A to D, M to L, E to F, and J to H. Half-duplex current loop operation requires the following jumper connections: A to C, N to L, J to H, and complete removal of the E/F/G jumper. The following text describes the operation of the current loop transmit and receive circuits when connected for a full-duplex current loop channel. Operation of the circuits on a half-duplex current loop channel is similar to that of the circuits on a full-duplex channel.

The current loop transmit circuit normally receives high -TRO•ON LN and -XMIT BREAK signals via N2C and a pulsing +HORZ 2^0 signal via gate R3. The signals to 2NC block R3 so that its output stays low. The low output from R3 holds Q7 of the pulse transformer off so that the pulse transformer does not produce an output. The external system passes current to the transmit circuit via AJ2-16 and biases Q6 and Q2 to turn on. When Q2 is on, it bypasses R33 and provides a return path for the system current via jumper to ground J-H. With current flowing in the loop in this manner, the transmit loop is in a quiescent marking condition (idle loop). When data is transmitted, the -TRO•ON LN signal line pulses high (mark) and low (space) to reflect the state of the data bits composing a transmit word. As -TRO•ON LN goes low to signify a space bit, it causes N2C-8 to go low and enable gate R3. R3 in turn passes the +HORZ 2^0 pulses to the pulse transformer causing it to produce bias voltage that turns off Q6 and Q2. The use of the +HORIZ 2^0 pulses provide efficient energy transfer across the pulse transformer. As Q6 and Q2 turn off, current flow in the transmit loop drops to about 0.2 mA because R33 now provides the only return path for current to the external system. The alternating mark and space bits of a transmit word turn the pulse transformer off and on and turn Q6 and Q2 on and off to reproduce the bits as current flow marks and no current flow spaces on the transmit loop.

In full-duplex mode, current flows through the receive circuit loop via AJ2-14 jumpers A and C, the MCT-4 diode, and back to the system ground AJ2-17. With current flowing through the MCT-4 diode, MCT-4 turns on and lowers the collector voltage of Q5 so that Q5 and Q4 turn off.

When Q4 is off, the -CURRENT RCV signal line is high (marking). When current flow in the loop drops, MCT-4 turns off causing Q5, and consequently Q4, to turn on. As Q4 turns on, the -CURRENT RCV signal line goes low (spacing).

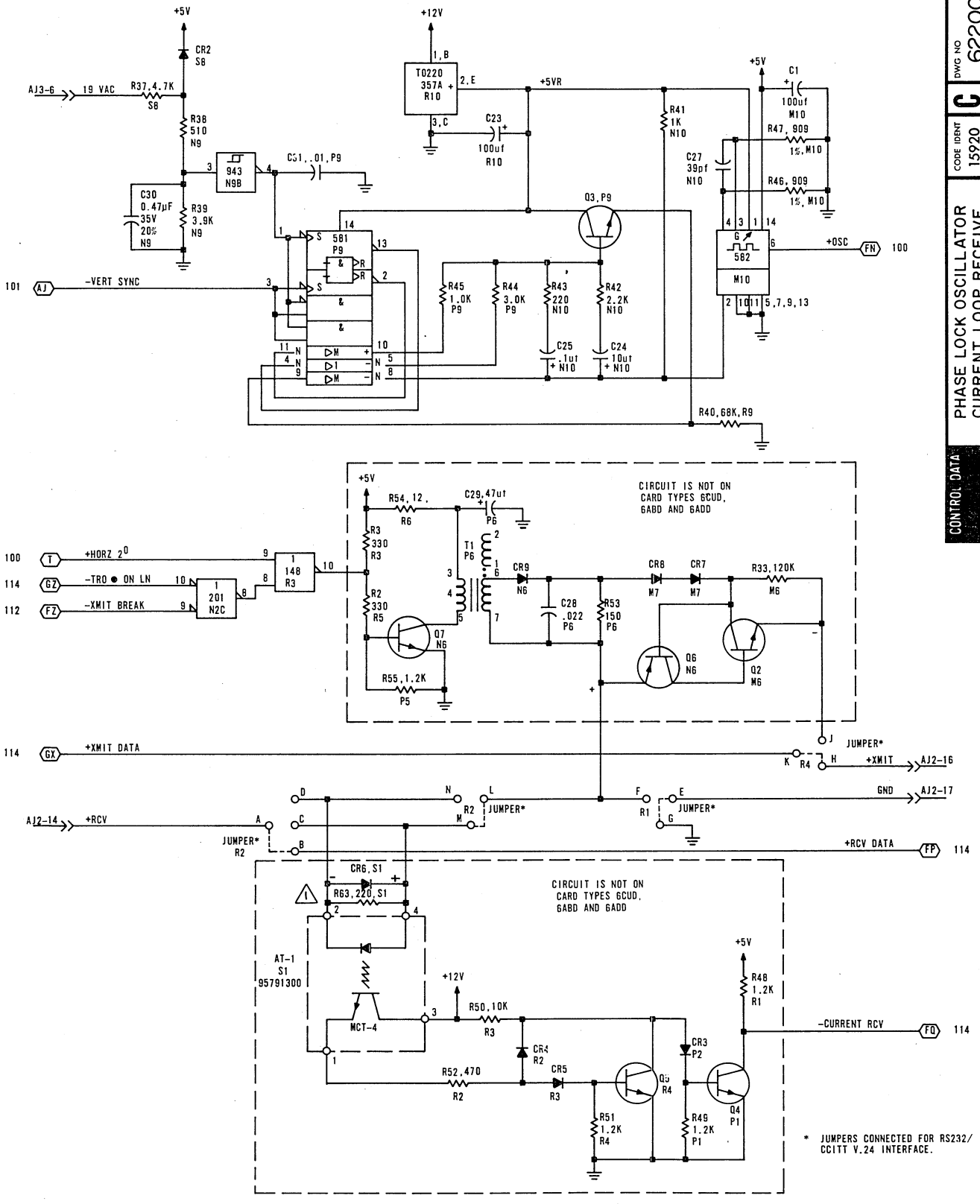

NOTES:

UNLESS OTHERWISE NOTED ALL CIRCUITS ARE PARTOF 6ABD, 6ACD, 6ADD, 6CUD, 6CVD AND 6AED BOARDS.

1 R63 IS ON THE -1 PC BOARDS ONLY.

REV (J)

DWG NO 62200824

SHEET 15

CROSS REF NO 111

CODE IDENT C 15920

PHASE LOCK OSCILLATOR
CURRENT LOOP RECEIVE
AND TRANSMIT

CONTROL DATA

LOC

CROSS REF NO 111

DIAGRAM 112
INTERNAL SWITCHES, BREAK AND ALARM, LAST-LINE COMPARE

Diagram 112 shows the internal control switches, the break and alarm logic, and the last-line compare logic of the display terminal. The functions of the internal control switches are described with the logic circuits that they affect; therefore, only the break and alarm logic and the last-line compare logic are described here.

BREAK AND ALARM LOGIC — Pressing the BREAK key on the display terminal keyboard causes the +BREAK signal line to go high (AJ1-10). If the display terminal is operating online, the break signal from the keyboard causes a 260 ms -XMIT BREAK signal to occur. This signal goes to the modem interface (diagram 114) or to the current loop interface (diagram 111) to enable a break signal (spacing condition) to be transmitted to the receiving station.

The alarm, or ring bell circuit becomes active if either: 1) an ANSI BEL code is decoded during a receive operation (-BELL and -RCV ACT signals are low), 2) the cursor moves from the 72nd to the 73rd character position of the display screen while transmitting (+BEEP and +KYBD ACT signals are high), or 3) a framing error or a break signal is detected during data reception (+FE and +RCV ACT signals are high). When any one of these conditions occur, it causes the -RING BELL signal line to the audible alarm (AJ2-3) in the display terminal to go low, sounding the the alram for about 200 ms.

LAST-LINE COMPARE LOGIC — The last-line compare circuit is only active when the display terminal is operating in scroll mode. The compare circuit monitors the output of the Y cursor counter (+CUR 2^{12} through 2^{8}) and the output of the last-line counter (+LST LN 2^{3} through 2^{0} and -LST LN 2^{4}) so that it can determine when the cursor is in the display line designated as the last line. When a match of the two counts occurs, the compare circuit output ANDs with the scroll mode signal to enable a +LST LN COMP signal to the scroll add gate (diagram 101). The scroll add gate, in turn, enables the last-line counter (diagram 104) to increment when the display screen is scrolled.

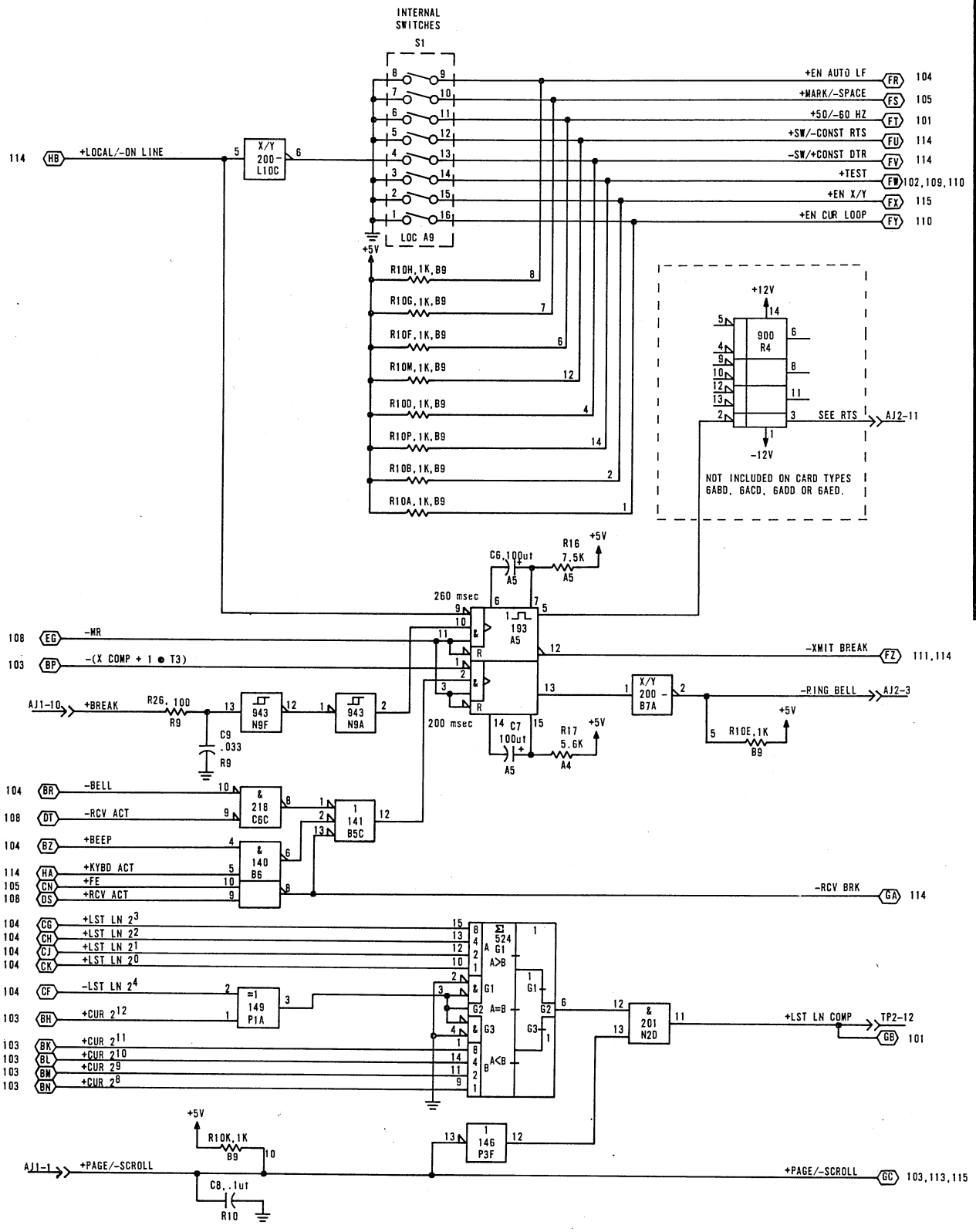

UNLESS OTHERWISE NOTED ALL CIRCUITS ARE PART OF 6ABD, 6ACD, 6ADD, 6CUD, 6CVD AND 6AED BOARDS.

REV U
DWG NO 62200824
SHEET 16
CROSS REF NO 112
CODE IDENT 15920 C
INTERNAL SWITCHES, BREAK AND ALARM LAST LINE COMPARE
CONTROL DATA

LOC
CROSS REF NO 112

DIAGRAM 113
X CURSOR CONTROL, Y CURSOR CONTROL, AND X CURSOR COUNTER

Diagram 113 depicts the logic for the Y cursor control circuit and for the X cursor counter and control circuits.

Y CURSOR CONTROL CIRCUIT — The Y cursor control circuit is a ROM that decodes signals from the cursor position and cursor function control circuits (diagrams 104 and 115) to determine whether to load the Y cursor counter (diagram 103) or to enable the counter for incrementing or decrementing. The Y cursor control ROM has four outputs and uses four combinations of these outputs for controlling the Y cursor counter: -LOAD Y CUR CTR; -LOAD Y CUR CTR and -SET CUR 2^{12}; -LOAD Y CUR CTR and -CLR CUR 2^{12}; and -EN Y CUR CTR. The following are listings giving the input signals that produce each of these output combinations.

- LOAD Y CUR CTR

-Y POS and -MAX Y
-Y POS and -MIN Y
-Y POS
-RST Y, -SCROLL, and -MAX Y
-RST Y, -SCROLL, and -MIN Y
-RST Y and -SCROLL

- LOAD Y CUR CTR and -CLR CUR 2^{12}

-INC Y and -MAX Y
-INC Y, -SCROLL, and -MAX Y
-RST Y and -MIN Y
-RST Y and -MAX Y
-RST Y

-LOAD Y CUR CTR and -SET CUR 2^{12}

-DEC Y and -MIN Y
-DEC Y, -SCROLL, and -MIN Y

-EN Y CUR CTR

-INC Y, -SCROLL, and -MIN Y
-INC Y and -SCROLL
-INC Y and -MIN Y
-INC Y
-DEC Y, -SCROLL, and -MAX Y
-DEC Y and -SCROLL
-DEC Y and -MAX Y
-DEC Y

X CURSOR CONTROL AND COUNTER CIRCUITS — The X cursor control circuit is a ROM that decodes signals from the cursor position and cursor function control circuits (diagrams 104 and 115) to determine whether to load the X cursor counter or to enable it for incrementing or decrementing. The X cursor control ROM has four outputs and uses only four combinations of these outputs for controlling the X cursor counter: load the X counter (F5-11); enable X counter (F5-12); increment Y (F5-9); and decrement Y (F5-10). The following are listings giving the input signals that produce each of the output combinations.

Load X Counter (F5-11)

-X POS and -MAX X
-X POS and -MIN X
-X POS
-RST X and -MAX X
-RST X
+MR

Enable X Counter (F5-12)

-INC X and -MIN X
-INC X
-MEM REQ and -MIN X
-MEM REQ
-DEC X and -MAX X
-DEC X

Load X and Increment Y (F5-9)

-MEM REQ and -MAX X
-INC X and -MAX X

Load X and Decrement Y (F5-10)

-DEC X and -MIN X

The X cursor counter tracks the horizontal positioning of the cursor on the display screen and passes this information to the cursor position decoder (diagram 104) and cursor compare circuit (diagram 105). The X cursor control circuit determines what count the X cursor counter contains by directing it either to load with X cursor positioning information from the +WRITE 2^6 through 2^0 lines or to increment or decrement its count. The load X counter signal passes from the control circuit (F5-11) via gate C6D, while the enable count signal passes directly from the control ROM (F5-12) to the counter (J4-4).

During load operations the -X POS signal determines whether the counter loads with write information (-X POS signal = 0) or with a count that depends on the state of the +MR and -MIN X signals (-X POS signal = 1). The counts possible in this latter instance are 79 when +MR = 0 and -MIN X = 0, and 0 for all other combinations of +MR and -MIN X.

During enable operations, the -DEC X signal determines whether the counter increments (-DEC X = 1) or decrements (-DEC X = 0) its count.

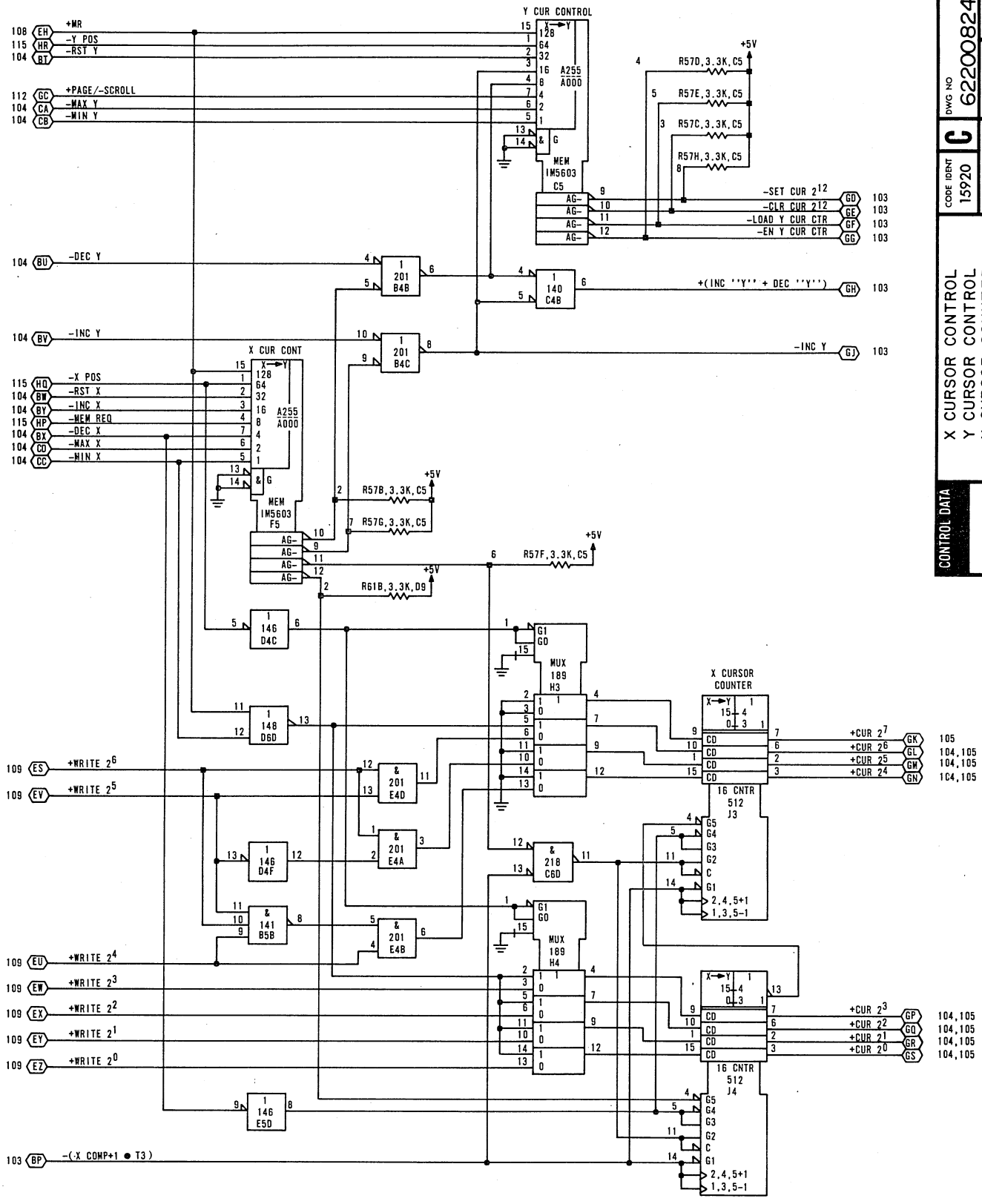

UNLESS OTHERWISE NOTED ALL CIRCUITS ARE PART OF 6ABD, 6ACD, 6ADD, 6CUD, 6CVD AND 6AED BOARDS.

LOC
CROSS REF NO 113

DIAGRAM 114
MODEM INTERFACE, RTS CONTROL

The upper half of diagram 114 depicts the modem interface logic, and the lower half depicts the request to send logic of the display terminal.

MODEM INTERFACE LOGIC — Receiver circuit M8 receives the clear to send (+CTS), data set ready (+DSR), and carrier on (+CO) signals directly from the modem and passes them on to the modem control logic (diagram 110). The receive data signal (+RCV DATA) also comes from the modem, but it first passes through the voltage level/current loop jumper connectors (diagram 111). The +RCV DATA line, receiver circuit M5, and jumper connectors P and Q are used for voltage level communication facilities, while the -CURRENT RCV line and jumper connectors R and Q are used for current loop communication facilities. The +EN RCV signal comes from the modem control logic (diagram 110), and it is required to enable either current loop or voltage level receive data into the display terminal logic via gate R8B. Receive data from either source then passes to the UART (diagram 105) via the +R1 signal line.

Gate R8C enables receive data to a peripheral printer via transmitter circuit R5 and the +PTR XMIT DATA line, if the display terminal is operating online; if local mode operation of the display terminal is selected, gate R8C blocks the passage of receive data to the peripheral printer. R5 also passes keyboard, or transmit data (+TRO) to a peripheral printer via gate R8D and the +PTR XMIT DATA line. Gate R8D is conditioned by gate L9C, which allows transmit data to pass to the printer only if the display terminal is operating either in local mode or in half-duplex and online modes. Selection of online and full-duplex modes of display terminal operation causes gate L9C to inhibit the transfer of keyed-in data to the printer or refresh memory by blocking gates R8D and C8A. This restricts the printing or displaying of information during online, full-duplex operation to received data.

Transmit data (+TRO) also passes through gate R8A, which is the control gate for passing transmit data to the communication facility. Selection of local mode operation blocks gate R8A, but when online mode operation is selected (+LOCAL/-ONLINE = 0) gate R8A passes transmit data to both the -TRO·ON LN and the +XMIT DATA signal lines. Both signal lines return to the current loop interface logic where jumper connectors determine which transmit data signal line is selected:

1) Current loop display terminals pass the -TRO·ON LN signal into the current transmitter circuit and then onto the +XMIT signal line via jumper connectors J and H (diagram 111).

2) Voltage level display terminals pass the +XMIT DATA signal through jumper connectors K and H onto the +XMIT signal line (diagram 111).

REQUEST TO SEND CONTROL LOGIC — The request to send signal is dependent on a number of variables with the display terminal. These variables are monitored by the modem control ROM (diagram 110) and by the RTS control logic shown on this diagram (diagram 114). A principal control signal for the RTS control logic is the -EN RTS signal, which originates at the modem control ROM; another principal control signal is the +SW/-CONST RTS signal from the internal control switches (diagram 112). Unless the -EN RTS signal is low, the RTS control circuit is disabled. The -EN RTS signal is not low when:

1) The display terminal is a current loop type and has the internal current loop enable switch (diagram 112) in the enable position (+EN CUR LOOP signal = 1).

2) The display terminal is a voltage level type and is enabled for a voltage level interface (+EN CUR LOOP signal = 0), but is operating using the switched position of the switched-or-constant DTR switch (diagram 112) and has the front panel ON LINE/LOCAL switch in the LOCAL position. This mode of operation disables the -DTR signal into the modem control ROM, which in turn causes the -EN RTS signal to go high.

3) The display terminal is a voltage level type and the data set ready signal from the modem drops for any reason. This condition causes the -DSR signal to the modem control ROM to go high, causing the -EN RTS signal to go high.

Other signals affecting RTS control logic are the -HALF/+FULL DUP signal from the front panel FULL DUP/HALF DUP switch; the +LOCAL/-ON LINE signal from the front panel ON LINE/LOCAL switch; the -RCV BRK signal from the break control logic (diagram 112); and the -CLR RTS signal from the data decode ROM (diagram 109). Following is a tabular listing of combinations of signals that affect RTS control logic and the effect that each combination has on the control logic.

-HALF/ +FULL DUP	-RCV BRK/ -CLR RTS	+LOCAL/ -ON LINE	+SW/ -CONSTR RTS	-EN RTS	EFFECT
X	X	X	0	0	-RTS goes low and remains low.
1 0	X 1	0 0	1 1	0 0	-RTS goes low following the first keyboard entry and remains low until one of the following occurs.
1 0	X X	1 1	1 1	0 0	Switching to local mode during either half- or full-duplex operation causes the -RTS signal to go high on second +VERT 2^0 pulse after UART transmit and transmit holding registers empty (+TRE and +THRE signals both go high).
0	0	0	1	0	-RTS signal goes high on second +VERT 2^0 pulse after UART transmit and transmit holding registers empty if either: a) a break signal or a character with a framing error is received (-RCV BRK signal goes low) b) or the -CLR RTS signal goes low due to detection of one of the following by the data decode ROM: a carriage return, an end of text, an end of transmission, or a line feed code.

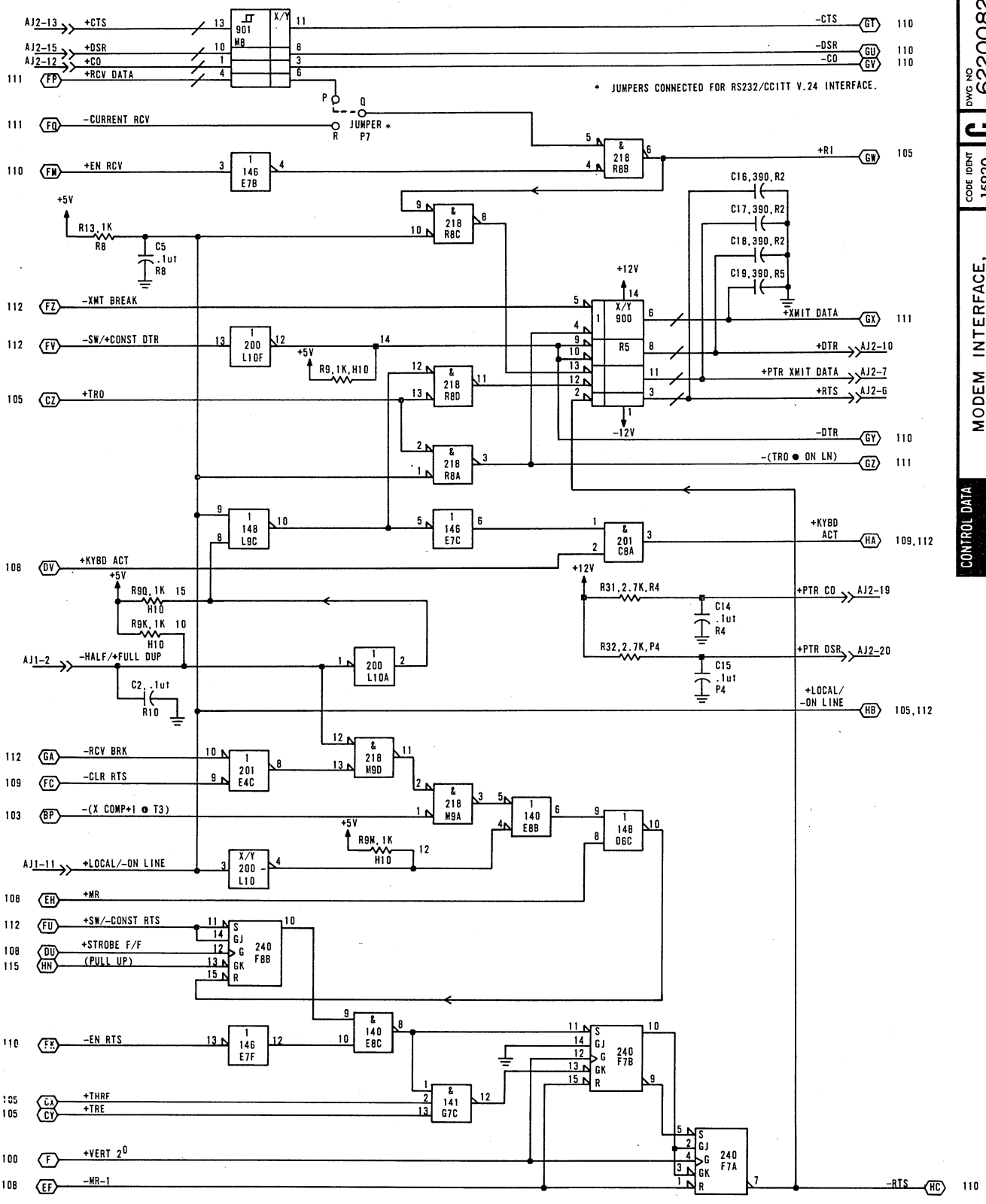
MODEM INTERFACE, RTS CONTROL
CONTROL DATA
DWG NO 62200824
REV U
SHEET 18
CROSS REF NO 114
CODE IDENT 15920
C
* JUMPERS CONNECTED FOR RS232/CCITT V.24 INTERFACE.
UNLESS OTHERWISE NOTED ALL CIRCUITS ARE PART OF 6ABD, 6ACD, 6ADD, 6CUD, 6CVD AND 6AED BOARDS.
LOC
CROSS REF NO 114

DIAGRAM 115
BAUD SELECT, X/Y POSITION CONTROL

The upper half of diagram 115 depicts the logic for selecting the transmit/receive baud rate of the display terminal while the lower half of the diagram shows the X/Y position control logic.

BAUD SELECT LOGIC — The -HIGH BAUD and -LOW BAUD signals originate at the front panel HIGH RATE/300/LOW RATE switch. Moving the switch to the HIGH RATE position causes the -HIGH BAUD signal to go low. With the -HIGH BAUD signal low, J10A-3 goes low to enable mux G10, while the high -LOW BAUD signal causes the high-rate switches to be muxed (mux input pins 3, 6, 10, and 13). Moving the front panel switch to the LOW RATE position causes the -LOW BAUD signal to go low. With the -LOW BAUD signal low, J10-3 goes low to enable mux G10, while the low -LOW BAUD signal enables multiplexing of the low-rate switches (mux input pins 2, 5, 11 and 14). If the front panel switch is moved to the 300 position, both the -HIGH BAUD and -LOW BAUD signals remain high. This, in turn, disables the mux and forces all outputs to go low. Following is a tabular listing that gives the relationship between the desired baud rate, the high rate/low rate switch settings, the input to baud select ROM G10, and the output from the ROM (baud counter preload).

Baud Rate Desired	Switch Settings 2^3 through 2^0	ROM Input 2^4 through 2^0	ROM Output Bit 8 through Bit 1	
110	1111	01111	0101	0000
150	1110	01110	1000	0000
200	1101	01101	1010	0000
300	1100 or 0000*	01100 or 00000	1100	0000
600	1011	01011	1110	0000
1200	1010	01010	1111	0000
1800	1001	01001	1111	0011
2400	1000	01000	1111	1000
4800	0111	00111	1111	1100
9600	0110	00110	1111	1110

X/Y POSITION CONTROL LOGIC — The X/Y position control logic provides the display terminal with the capability of detecting X/Y cursor positioning inputs. To do this, the internal X/Y positioning switch must be in its enable position and the display terminal must be operating in page mode (+EN X/Y = 1 and +PAGE/-SCROLL = 1). Detection of an escape code (033_8) and 061_8 sequence then can activate the X/Y position control logic. The escape code is detected by the data decode ROM (diagram 109); this causes the -(ESC + 061_8) signal to go low. Since the +WRITE 2^5 bit is also low when the escape code is detected, flip-flop H8B clears, and as it does so, it blocks memory request gate K8C and enables X position flip-flop H8A. The 061_8 input then sets flip-flop H8A, which provides a -X POS signal to the X cursor control ROM (diagram 113) and conditions the Y position flip-flop G8B for setting. The next character input is interpreted as the X cursor positioning input. As this input ends, it sets flip-flop H8B, clears flip-flop H8A, and sets Y position flip-flop G8B. As flip-flop G8B sets, it provides a -Y POS signal to the Y cursor control ROM and to the Y cursor counter and mux circuit (diagrams 113 and 103). The next character input is interpreted as the Y cursor positioning input; and as this input ends, it clears flip-flop G8B to complete the X/Y positioning operation and enables the memory request gate (K8C).

---

* 300 baud can be either switch-selected via internal switches and high or low position of front panel switch, or via 300 position of front panel switch only.

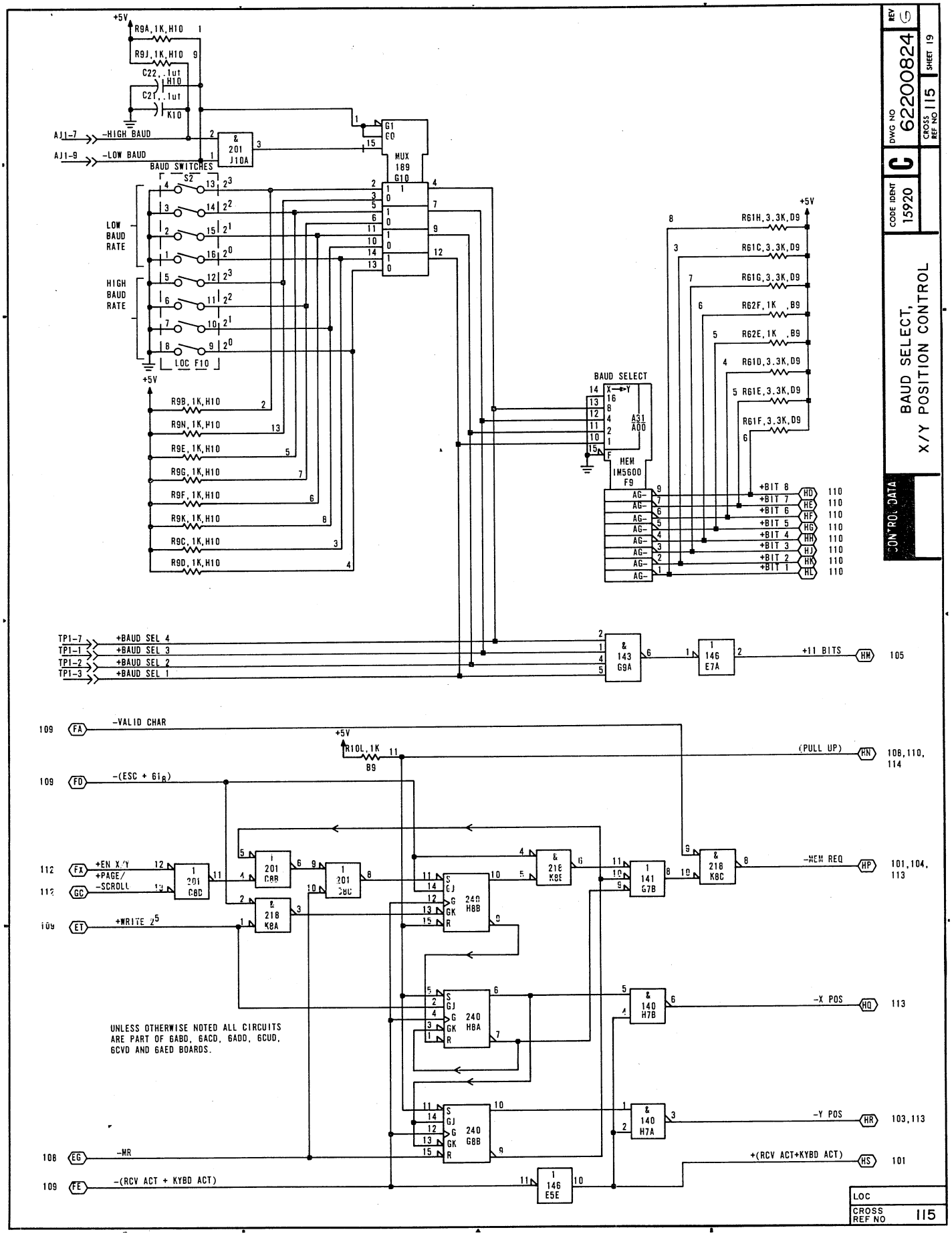

BAUD SELECT, X/Y POSITION CONTROL
CONTROL DATA
CODE IDENT 15920
C
DWG NO 62200824
REV G
CROSS REF NO 115
SHEET 19
BAUD SWITCHES
LOW BAUD RATE
HIGH BAUD RATE
LOC F10
MUX 189 G10
BAUD SELECT
MEM 1M5600 F9
-HIGH BAUD
-LOW BAUD
+BAUD SEL 4
+BAUD SEL 3
+BAUD SEL 2
+BAUD SEL 1
+11 BITS
-VALID CHAR
-(ESC + 6i8)
+EN X/Y
+PAGE/
-SCROLL
+WRITE 2
-MEM REQ
-X POS
-Y POS
-MR
-(RCV ACT + KYBD ACT)
+(RCV ACT+KYBD ACT)
(PULL UP)
UNLESS OTHERWISE NOTED ALL CIRCUITS ARE PART OF 6ABD, 6ACD, 6ADD, 6CUD, 6CVD AND 6AED BOARDS.
LOC
CROSS REF NO 115

MAIN TIMING

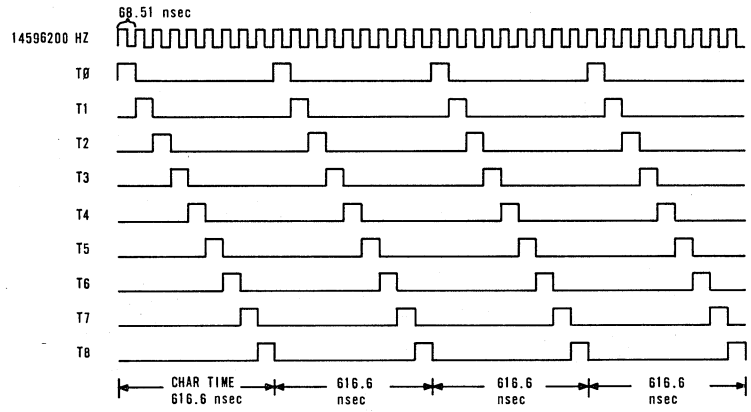

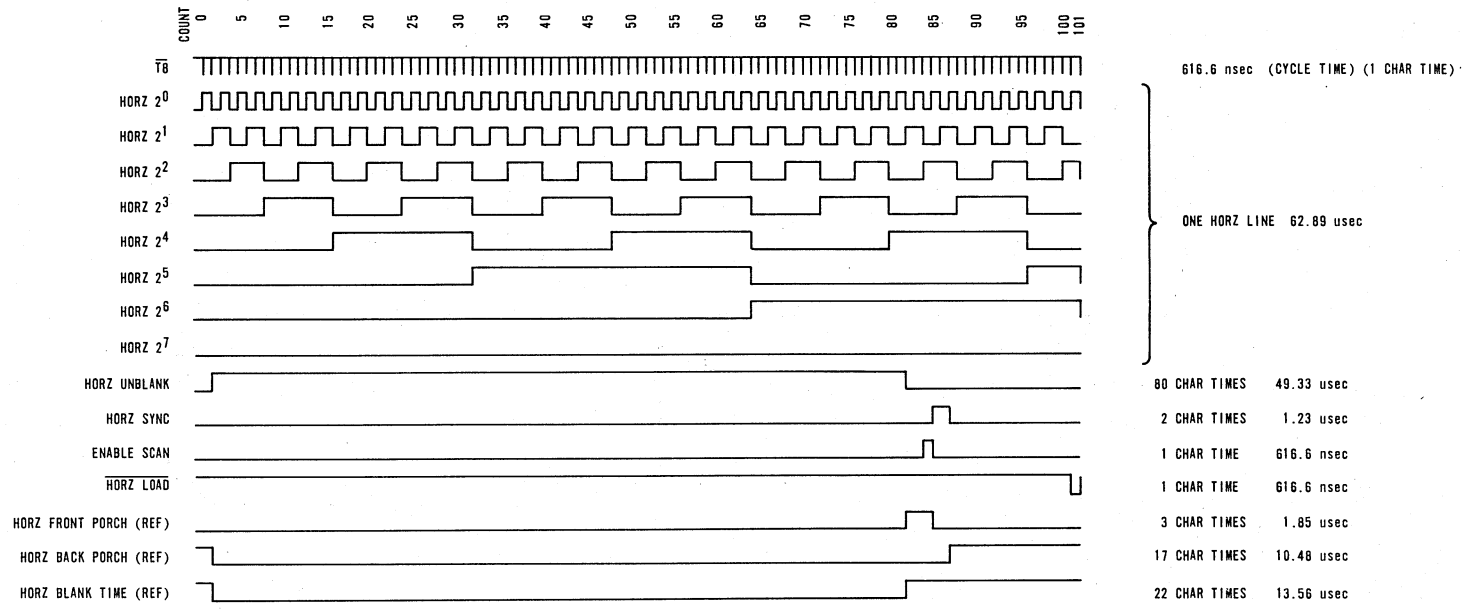

HORZ REFRESH & MEMORY TIMING

CONTROL DATA	TIMING DIAGRAM	CODE IDENT 15920	C	DWG NO 62200824	REV 5
				CROSS REF NO	SHEET 20

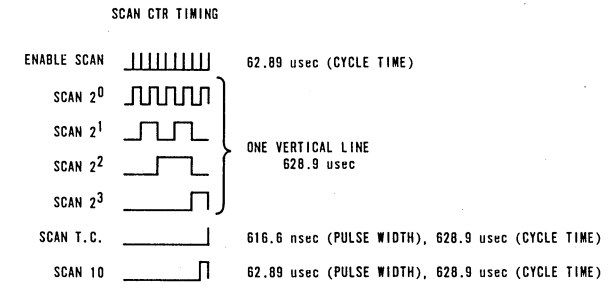

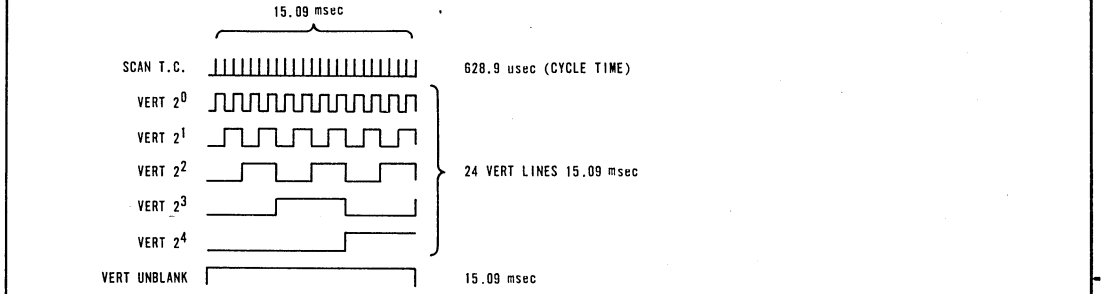

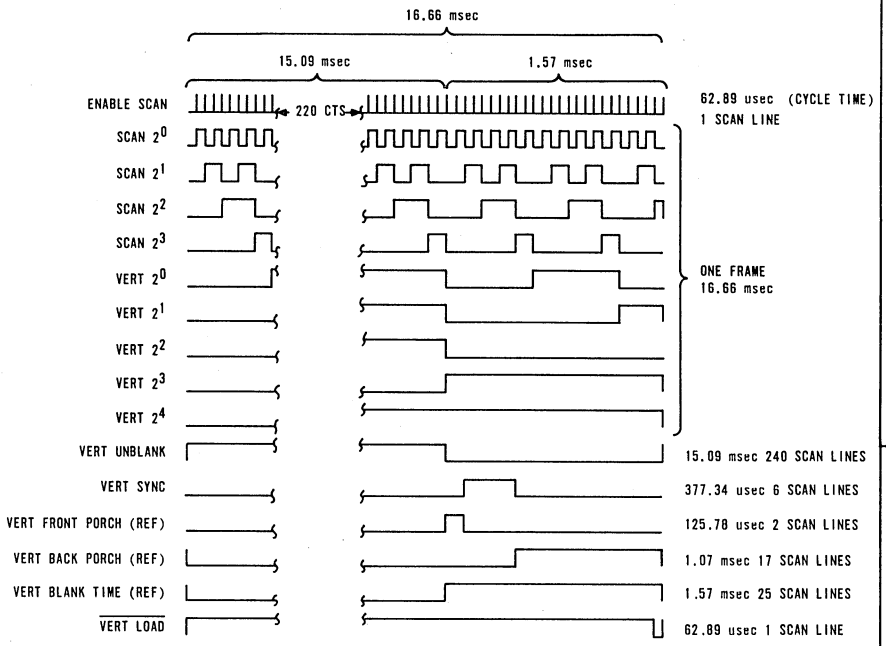

VERTICAL REFRESH TIMING 60 HZ

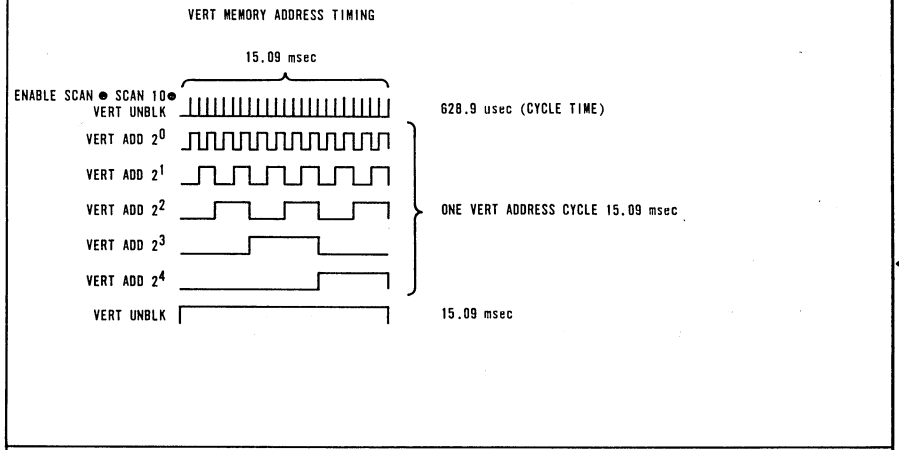

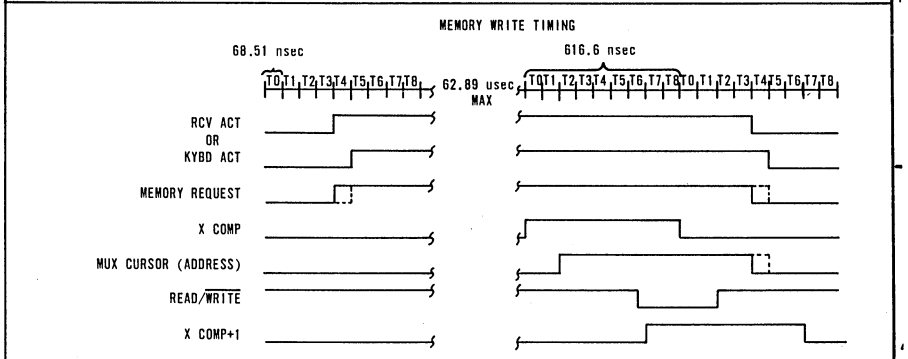

CONTROL DATA	TIMING DIAGRAM	CODE IDENT 15920	C	DWG NO 62200824	REV G
				CROSS REF NO	SHEET 21

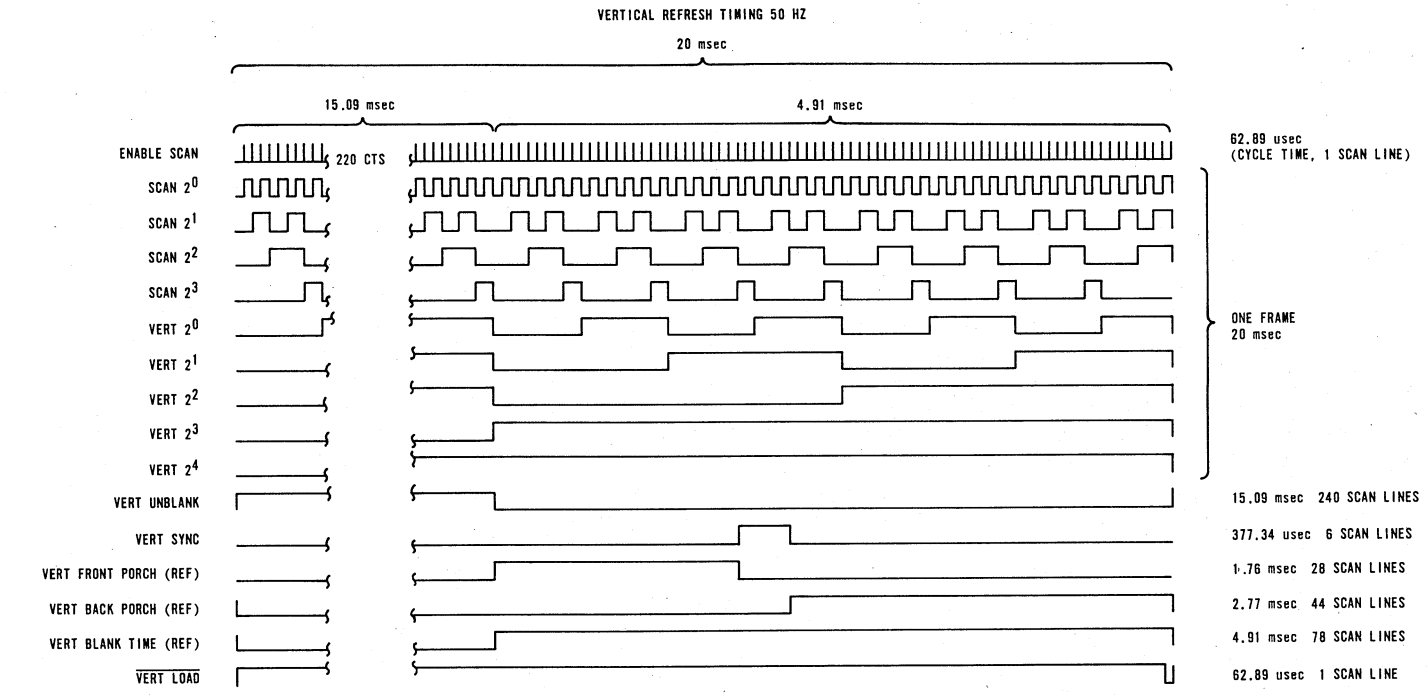

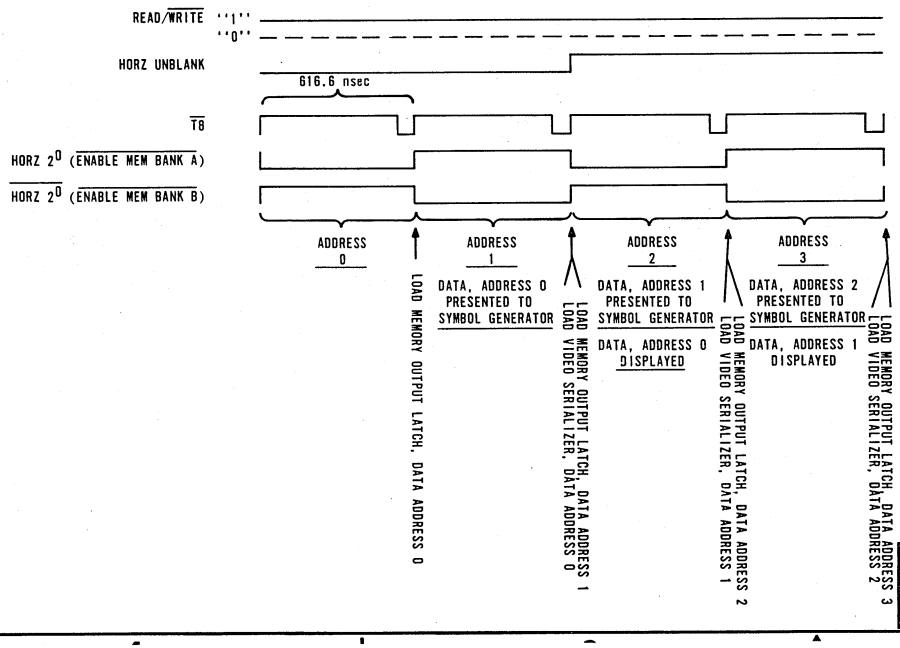

READ MEMORY + MEMORY OUTPUT TIMING (REFRESH)

CONTROL DATA	TIMING DIAGRAM	CODE IDENT 15920	C	DWG NO 62200824	REV G
				CROSS REF NO	SHEET 22

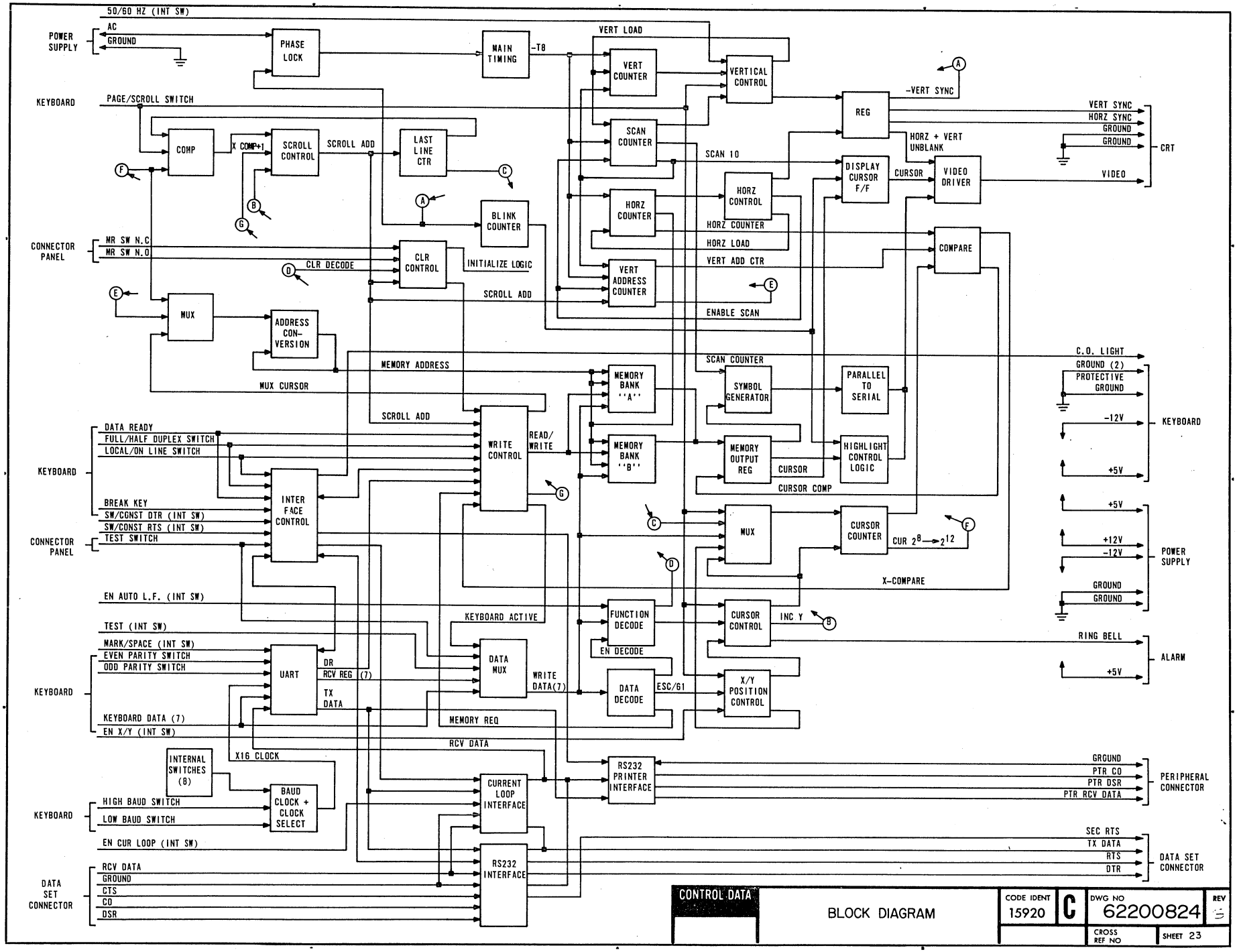
50/60 HZ (INT SW)
POWER SUPPLY
AC
GROUND
PHASE LOCK
MAIN TIMING
-T8
VERT LOAD
VERT COUNTER
VERTICAL CONTROL
KEYBOARD
PAGE/SCROLL SWITCH
COMP
X COMP+1
SCROLL CONTROL
SCROLL ADD
LAST LINE CTR
SCAN COUNTER
SCAN 10
REG
-VERT SYNC
VERT SYNC
HORZ SYNC
GROUND
GROUND
CRT
HORZ + VERT UNBLANK
DISPLAY CURSOR F/F
CURSOR
VIDEO DRIVER
VIDEO
HORZ COUNTER
HORZ CONTROL
HORZ COUNTER
HORZ LOAD
VERT ADD CTR
BLINK COUNTER
CONNECTOR PANEL
MR SW N.C
MR SW N.O
CLR CONTROL
CLR DECODE
INITIALIZE LOGIC
SCROLL ADD
ENABLE SCAN
VERT ADDRESS COUNTER
COMPARE
MUX
ADDRESS CON-VERSION
MEMORY ADDRESS
MUX CURSOR
SCAN COUNTER
SYMBOL GENERATOR
PARALLEL TO SERIAL
C.O. LIGHT
GROUND (2)
PROTECTIVE GROUND
-12V
+5V
KEYBOARD
MEMORY BANK "A"
MEMORY BANK "B"
MEMORY OUTPUT REG
CURSOR
HIGHLIGHT CONTROL LOGIC
CURSOR COMP
DATA READY
FULL/HALF DUPLEX SWITCH
LOCAL/ON LINE SWITCH
KEYBOARD
WRITE CONTROL
READ/ WRITE
SCROLL ADD
INTER FACE CONTROL
BREAK KEY
SW/CONST DTR (INT SW)
SW/CONST RTS (INT SW)
TEST SWITCH
CONNECTOR PANEL
MUX
CURSOR COUNTER
CUR $2^8 \rightarrow 2^{12}$
+5V
+12V
-12V
GROUND
GROUND
POWER SUPPLY
X-COMPARE
EN AUTO L.F. (INT SW)
TEST (INT SW)
KEYBOARD ACTIVE
FUNCTION DECODE
CURSOR CONTROL
INC Y
EN DECODE
RING BELL
+5V
ALARM
MARK/SPACE (INT SW)
EVEN PARITY SWITCH
ODD PARITY SWITCH
KEYBOARD
UART
DR
RCV REG (7)
TX DATA
DATA MUX
WRITE DATA(7)
DATA DECODE
ESC/61
X/Y POSITION CONTROL
KEYBOARD DATA (7)
EN X/Y (INT SW)
MEMORY REQ
RCV DATA
INTERNAL SWITCHES (8)
X16 CLOCK
RS232 PRINTER INTERFACE
GROUND
PTR CO
PTR DSR
PTR RCV DATA
PERIPHERAL CONNECTOR
BAUD CLOCK + CLOCK SELECT
CURRENT LOOP INTERFACE
HIGH BAUD SWITCH
LOW BAUD SWITCH
KEYBOARD
EN CUR LOOP (INT SW)
SEC RTS
TX DATA
RTS
DTR
DATA SET CONNECTOR
RCV DATA
GROUND
CTS
CO
DSR
DATA SET CONNECTOR
RS232 INTERFACE
CONTROL DATA
BLOCK DIAGRAM
CODE IDENT 15920
C
DWG NO 62200824
REV
CROSS REF NO
SHEET 23

SHEET NO	CROSS REFERENCE NUMBER	MODULE LOCATION	REV	LOGIC DIAGRAM TITLE
1			D	LOGIC DIAGRAM CONTENTS SHEET
2			A	KEY TO DIAGRAMS-PHYSICAL LOCATION CODES
3			A	KEY TO SYMBOLS
4	100		C	MAIN TIMING, HORIZONTAL, SCAN, AND VERTICAL COUNTER
5	101		C	HORIZONTAL AND VERTICAL CONTROL, VERTICAL ADDRESS COUNTER, READ/WRITE CONTROL
6	102		D	MEMORY OUTPUT LATCH, CHARACTER GENERATOR, VIDEO SERIALIZER, BLINK COUNTER, DISPLAY CURSOR F/F
7	103		A	"Y" CURSOR COUNTER AND MUX, VIDEO DRIVER CIRCUIT
8	104		A	CURSOR FUNCTION DECODE, CURSOR POSITION DECODE, LAST LINE COUNTER
9	105		A	UART, "X" COMPARE, CURSOR COMPARE
10	106		A	MEMORY BANK "A"
11	107		A	MEMORY BANK "B"
12	108		A	CLEAR CONTROL, RECEIVE AND KEYBOARD CONTROL
13	109		A	MEMORY ADDRESS CONVERSION, DATA DECODE
14	110		A	BAUD COUNTER, MODEM CONTROL
15	111		A	PHASE LOCK OSCILLATOR CURRENT LOOP RECEIVE AND TRANSMIT
16	112		A	INTERNAL SWITCHES, BREAK AND ALARM LAST LINE COMPARE
17	113		A	X CURSOR CONTROL, Y CURSOR CONTROL, X CURSOR COUNTER
18	114		B	MODEM INTERFACE, RTS CONTROL
19	115		A	BAUD SELECT, X/Y POSITION CONTROL
20	---		A	TIMING DIAGRAM
21	---		A	TIMING DIAGRAM
22	---		A	TIMING DIAGRAM
23	---		A	BLOCK DIAGRAM
24	---		A	FILTER CAPACITOR SPARE LOCATION

REVISION RECORD

REV	CO	DESCRIPTION	DRFT	DATE	CHKD	APP
A	12402-79	RELEASED CLASS A	/	10/27/78		[illegible]
B	13344	REVISED PER ECO	EE	6/15/79	EE	[illegible]
C	13581	REVISED PER ECO	WJH	7-13-79	[illegible]	[illegible]
D	14566	CHG E6 CHIP DESCRIPTION	WJG	3-10-81	WJG	[illegible]

SHEET REVISION STATUS

TITLE: LOGIC DIAGRAM CONTENTS SHEET

CODE IDENT 15920 | C | DRAWING NO 62201031

SCALE | CROSS REF NO | SHEET 1 OF 24

CONTROL DATA

FIRST USED ON: CC5B1A,B,C,D

DWN	WJ HERMAN	10-26-78
CHKD	[illegible]	10-26-78
ENGR	[illegible]	10-26-78
MFG	[illegible]	10/27/78
APPR	[illegible]	10-27-78

REFERENCE DRAWING

COMPONENTS, EXCEPT AS NOTED

	TOLERANCE	VALUE	RATING
RES			
CAP			

NOTES:

1. FOR LOGIC CHIP INFORMATION SEE DWG. 82297000 (KEY TO SYMBOLS).

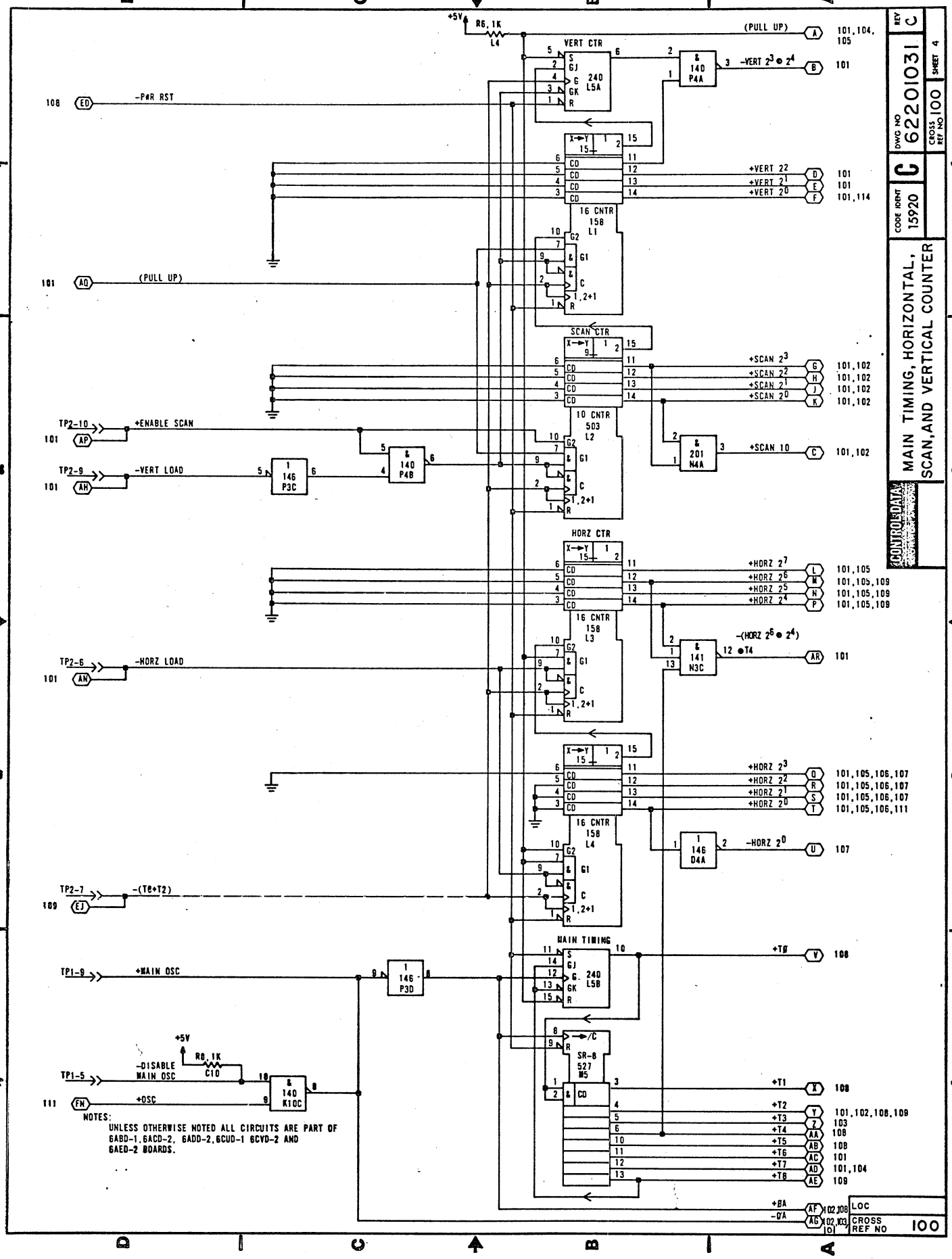
MAIN TIMING, HORIZONTAL, SCAN, AND VERTICAL COUNTER
CONTROL DATA
DWG NO 62201031
REV C
SHEET 4
CODE IDENT 15920
CROSS REF NO 100
+5V
R6, 1K
L4
(PULL UP)
VERT CTR
240 L5A
-VERT 2^3 • 2^4
140 P4A
-P#R RST
+VERT 2^2
+VERT 2^1
+VERT 2^0
16 CNTR 158 L1
SCAN CTR
+SCAN 2^3
+SCAN 2^2
+SCAN 2^1
+SCAN 2^0
10 CNTR 503 L2
+ENABLE SCAN
-VERT LOAD
146 P3C
140 P4B
201 N4A
+SCAN 10
HORZ CTR
+HORZ 2^7
+HORZ 2^6
+HORZ 2^5
+HORZ 2^4
16 CNTR 158 L3
-(HORZ 2^6 • 2^4)
141 N3C
-HORZ LOAD
+HORZ 2^3
+HORZ 2^2
+HORZ 2^1
+HORZ 2^0
16 CNTR 158 L4
146 D4A
-HORZ 2^0
-(T6+T2)
MAIN TIMING
240 L5B
+TB
+MAIN OSC
146 P3D
SR-8 527 M5
+T1
+T2
+T3
+T4
+T5
+T6
+T7
+T8
+BA
-DA
-DISABLE MAIN OSC
R8, 1K
C10
140 K10C
+OSC
NOTES:
UNLESS OTHERWISE NOTED ALL CIRCUITS ARE PART OF 6ABD-1, 6ACD-2, 6ADD-2, 6CUD-1 6CYD-2 AND 6AED-2 BOARDS.
LOC
CROSS REF NO 100

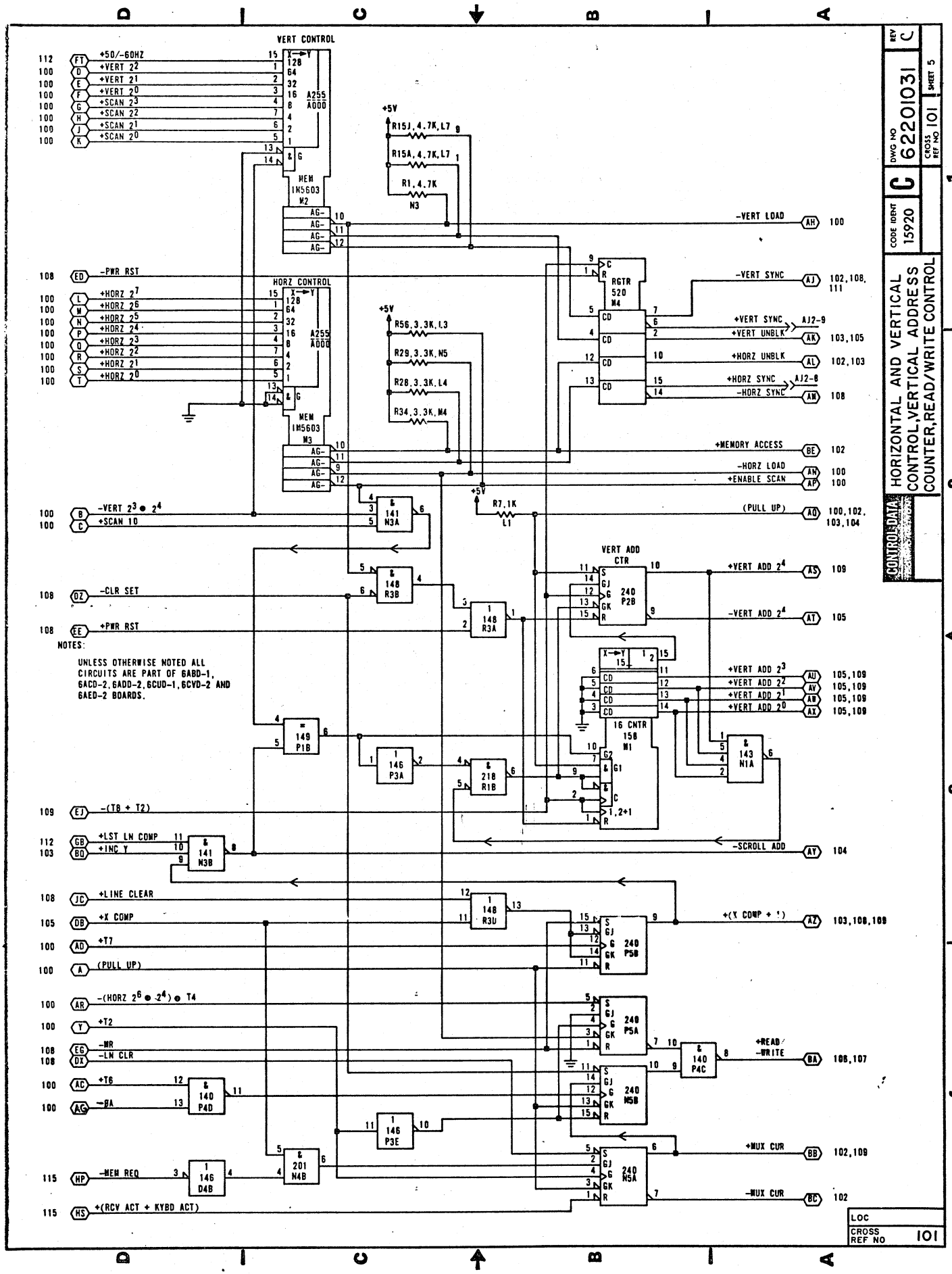
VERT CONTROL
HORZ CONTROL
+50/-60HZ
+VERT 2^2
+VERT 2^1
+VERT 2^0
+SCAN 2^3
+SCAN 2^2
+SCAN 2^1
+SCAN 2^0
+HORZ 2^7
+HORZ 2^6
+HORZ 2^5
+HORZ 2^4
+HORZ 2^3
+HORZ 2^2
+HORZ 2^1
+HORZ 2^0
-PWR RST
-VERT LOAD
-VERT SYNC
+VERT SYNC
+VERT UNBLK
+HORZ UNBLK
+HORZ SYNC
-HORZ SYNC
+MEMORY ACCESS
-HORZ LOAD
+ENABLE SCAN
(PULL UP)
-VERT 2^3 • 2^4
+SCAN 10
-CLR SET
+PWR RST
+VERT ADD 2^4
-VERT ADD 2^4
+VERT ADD 2^3
+VERT ADD 2^2
+VERT ADD 2^1
+VERT ADD 2^0
-(T8 + T2)
+LST LN COMP
+INC Y
-SCROLL ADD
+LINE CLEAR
+X COMP
+T7
(PULL UP)
-(HORZ 2^6 • 2^4) • T4
+T2
-MR
-LN CLR
+T6
-BA
-MEM REQ
+(RCV ACT + KYBD ACT)
+(X COMP + 1)
+READ/-WRITE
+MUX CUR
-MUX CUR
NOTES:
UNLESS OTHERWISE NOTED ALL CIRCUITS ARE PART OF 6ABD-1, 6ACD-2, 6ADD-2, 6CUD-1, 6CVD-2 AND 6AED-2 BOARDS.
CONTROL DATA
HORIZONTAL AND VERTICAL CONTROL, VERTICAL ADDRESS COUNTER, READ/WRITE CONTROL
DWG NO 62201031
REV C
SHEET 5
CODE IDENT 15920
CROSS REF NO 101
LOC
CROSS REF NO 101

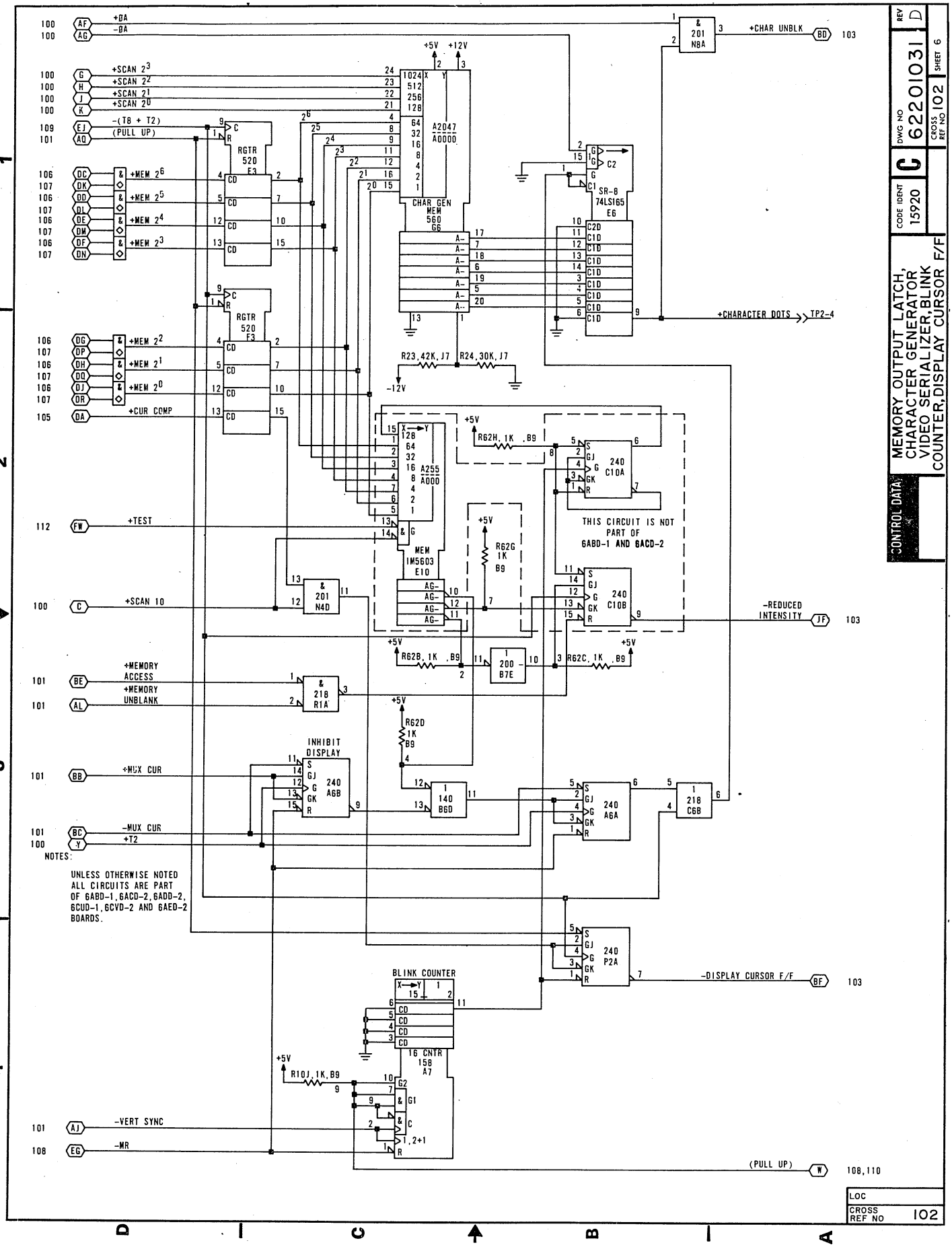
MEMORY OUTPUT LATCH, CHARACTER GENERATOR VIDEO SERIALIZER, BLINK COUNTER, DISPLAY CURSOR F/F
CONTROL DATA
CODE IDENT 15920
DWG NO 62201031
REV D
SHEET 6
CROSS REF NO 102
+DA
-DA
+CHAR UNBLK
+SCAN 2^3
+SCAN 2^2
+SCAN 2^1
+SCAN 2^0
-(T8 + T2)
(PULL UP)
RGTR 520 F3
+MEM 2^6
+MEM 2^5
+MEM 2^4
+MEM 2^3
+MEM 2^2
+MEM 2^1
+MEM 2^0
+CUR COMP
CHAR GEN MEM 560 G6
SR-8 74LS165 E6
+CHARACTER DOTS
TP2-4
R23,42K,J7
R24,30K,J7
-12V
+5V
+12V
R62H,1K,B9
240 C10A
THIS CIRCUIT IS NOT PART OF 6ABD-1 AND 6ACD-2
A255 A000
MEM IM5603 E10
+TEST
+SCAN 10
R62G 1K B9
240 C10B
-REDUCED INTENSITY
R62B,1K,B9
R62C,1K,B9
+MEMORY ACCESS
+MEMORY UNBLANK
INHIBIT DISPLAY
+MUX CUR
-MUX CUR
+T2
R62D 1K B9
240 A6B
240 A6A
NOTES:
UNLESS OTHERWISE NOTED ALL CIRCUITS ARE PART OF 6ABD-1,6ACD-2,6ADD-2, 6CUD-1,6CVD-2 AND 6AED-2 BOARDS.
BLINK COUNTER
16 CNTR 158 A7
R10J,1K,B9
-VERT SYNC
-MR
240 P2A
-DISPLAY CURSOR F/F
(PULL UP)
LOC
CROSS REF NO 102

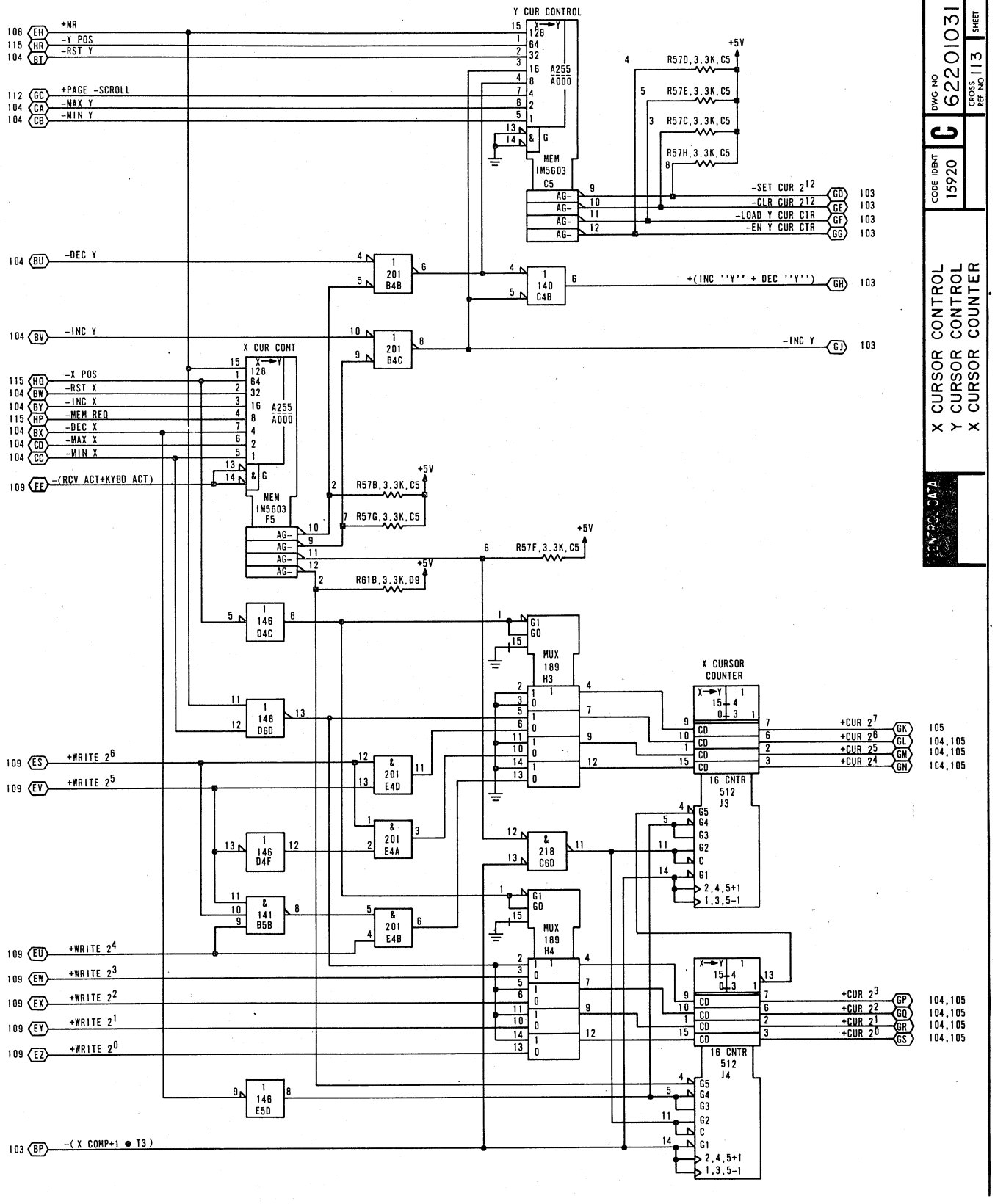

UNLESS OTHERWISE NOTED ALL CIRCUITS ARE PART OF A 6ABD-1,6ACD-2,6ADD-2,6CUD-1,6CVD-2 AND 6AED-2 BOARDS.

CONTROL DATA	X CURSOR CONTROL Y CURSOR CONTROL X CURSOR COUNTER
CODE IDENT 15920	C
DWG NO 62201031	REV f
CROSS REF NO 113	SHEET 17

LOC	
CROSS REF NO	113

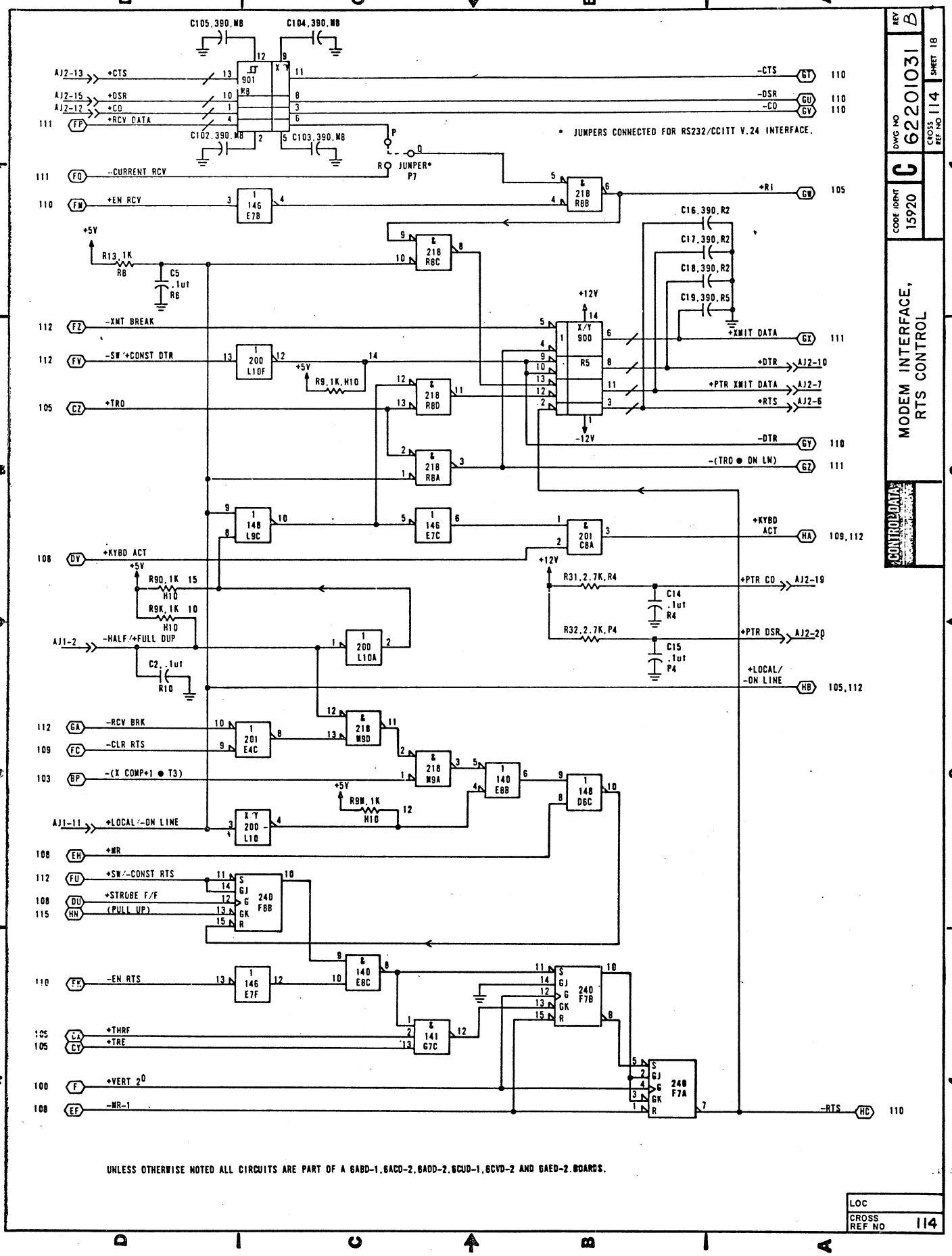
MODEM INTERFACE, RTS CONTROL
CONTROL DATA
REV B
DWG NO 62201031
SHEET 18
CODE IDENT 15920
C
CROSS REF NO 114
* JUMPERS CONNECTED FOR RS232/CCITT V.24 INTERFACE.
UNLESS OTHERWISE NOTED ALL CIRCUITS ARE PART OF A 6ABD-1, 6ACD-2, 6ADD-2, 6CUD-1, 6CVD-2 AND 6AED-2 BOARDS.
LOC
CROSS REF NO 114

SHEET REVISION STATUS

REVISION RECORD						
REV	CO	DESCRIPTION	DRFT	DATE	CHKD	APP
D	12702	REVISED PER ECO	BMG	4-3-78		
E	14429	REVISED PER ECO	EE	12/19/80		

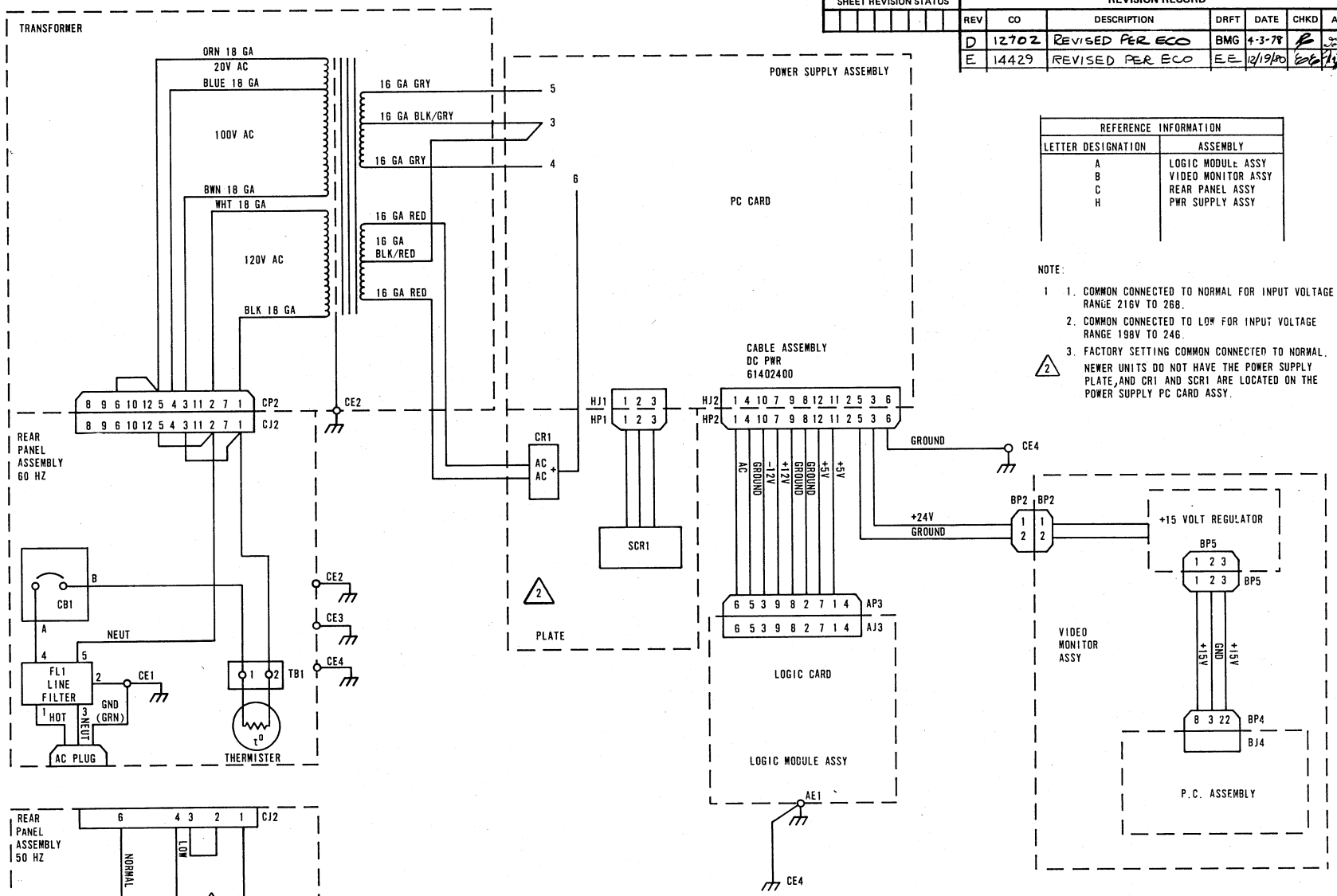

REFERENCE INFORMATION	
LETTER DESIGNATION	ASSEMBLY
A	LOGIC MODULE ASSY
B	VIDEO MONITOR ASSY
C	REAR PANEL ASSY
H	PWR SUPPLY ASSY

NOTE:

1. 1. COMMON CONNECTED TO NORMAL FOR INPUT VOLTAGE RANGE 216V TO 268.
   2. COMMON CONNECTED TO LOW FOR INPUT VOLTAGE RANGE 198V TO 246.
   3. FACTORY SETTING COMMON CONNECTED TO NORMAL.
2. NEWER UNITS DO NOT HAVE THE POWER SUPPLY PLATE, AND CR1 AND SCR1 ARE LOCATED ON THE POWER SUPPLY PC CARD ASSY.

REFERENCE DRAWING	CONTROL DATA		
	FIRST USED ON	CC5B1A,B,C,D	
	DWN	B. Graf	11-14-75
	CHKD	DAK	1-27-76
	ENGR	J Doll	2/9/76
	MFG	D. Albright	2/26/76
	APPR	Spencer	2/25/76

COMPONENTS, EXCEPT AS NOTED

	TOLERANCE	VALUE	RATING
RES			
CAP			

TITLE: AC/DC POWER INTERCONNECT DIAGRAM

CODE IDENT 15920 | C | DRAWING NO 62199500

SCALE | CROSS REF NO | SHEET 1 OF 1

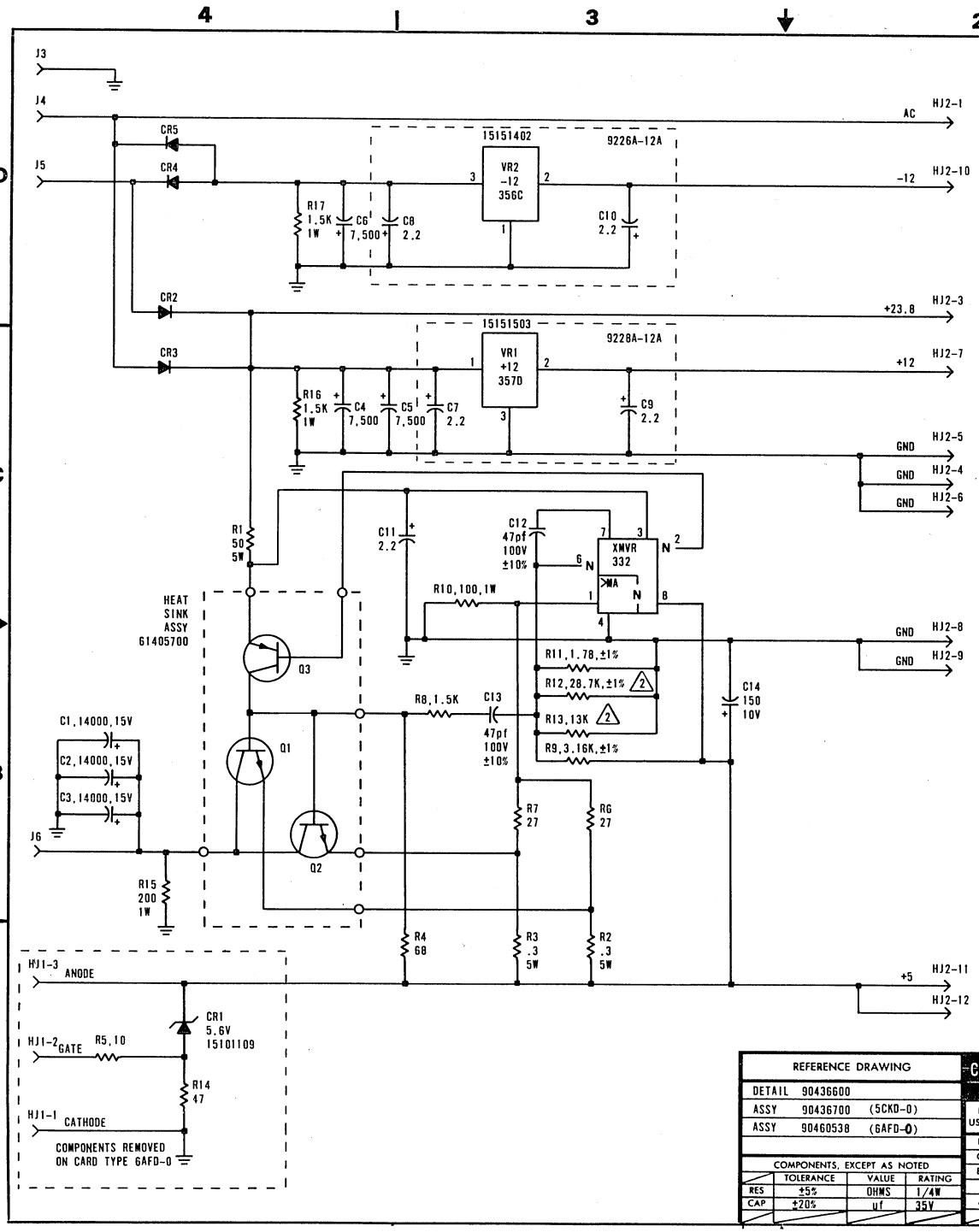

SHEET REVISION STATUS							

REVISION RECORD

REV	CO	DESCRIPTION	DRFT	DATE	CHKD	APP
—	———	RELEASED CLASS C	MD.	10/15/75	DL	RK
01	C536	REVISED PER ECO	JM	12-8-75	[illegible]	[illegible]
A	10653-32	RELEASED CLASS A		2/11/76		[illegible]
B	11395	REVISED PER ECO	MD	4-1-76	[illegible]	[illegible]
C	14429	REVISED PER ECO	EE	12/19/80	[illegible]	[illegible]

NOTE:

1. UNLESS OTHERWISE SPECIFIED ALL DIODES TO BE 51610800.
2. TO SET OUTPUT TO +5.0 VOLTS ±.25 VOLTS REMOVE R13 FOR A DECREASE OF .5 VOLT AND/OR R12 FOR A DECREASE OF .25 VOLTS.

REFERENCE DRAWING		
DETAIL	90436600	
ASSY	90436700	(5CKD-0)
ASSY	90460538	(6AFD-0)

COMPONENTS, EXCEPT AS NOTED			
	TOLERANCE	VALUE	RATING
RES	±5%	OHMS	1/4W
CAP	±20%	uf	35V

CONTROL DATA

FIRST USED ON	CC5B1	
DWN	Mary Dietz	10-15-75
CHKD	D. LaDue	10-27-75
ENGR	[illegible]	10-27-75
MFG	[illegible]	2-11-76
APPR	[illegible]	2-11-76

TITLE

SCHEMATIC DIAGRAM, MET PWR SUPPLY

CODE IDENT 15920 | C | DRAWING NO 90436500

SCALE | CROSS REF NO | SHEET OF

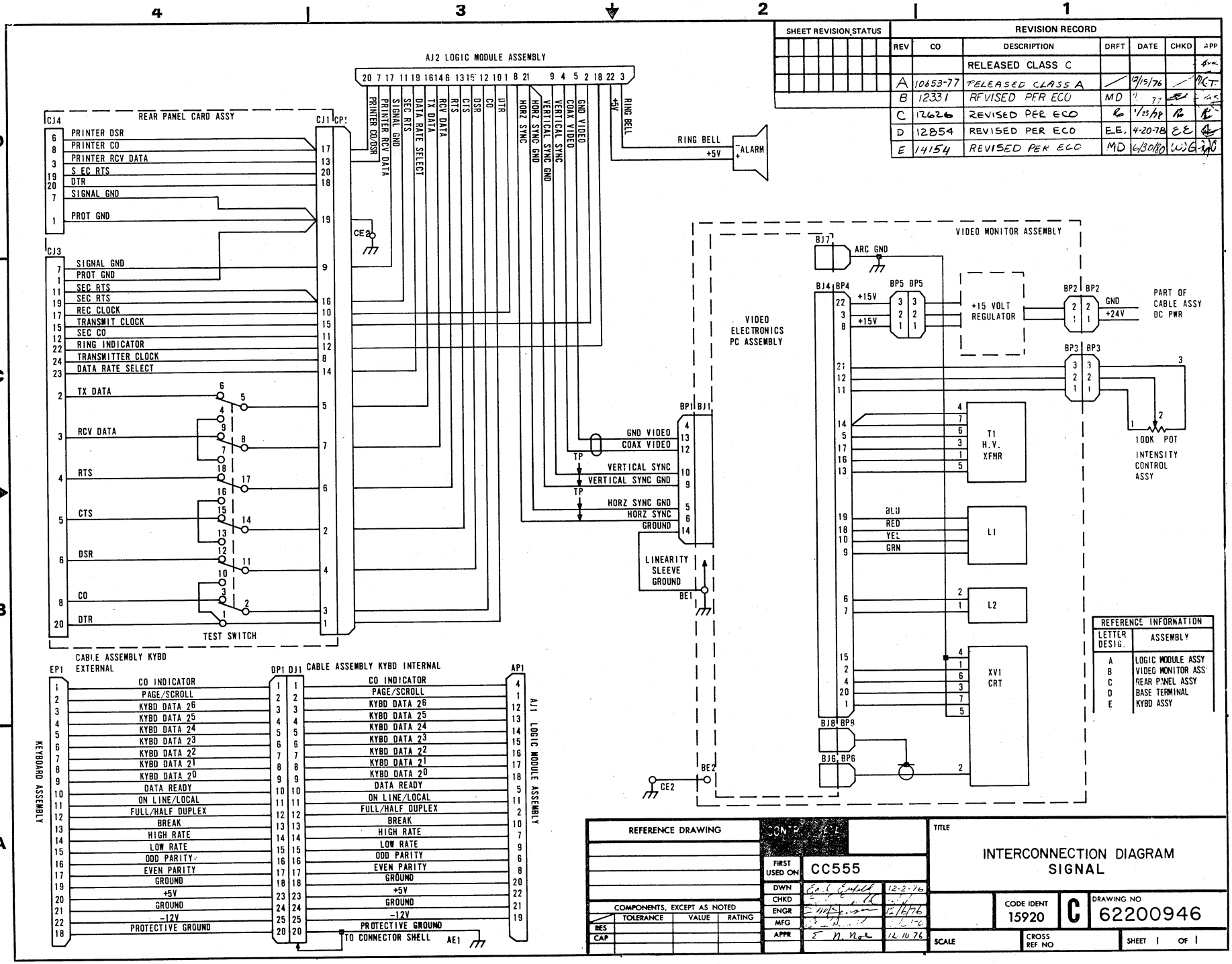

SHEET REVISION STATUS							

REVISION RECORD

REV	CO	DESCRIPTION	DRFT	DATE	CHKD	APP
		RELEASED CLASS C				
A	10653-77	RELEASED CLASS A		12/15/76		
B	12331	REVISED PER ECO	MD	1/23/77		
C	12626	REVISED PER ECO		1/23/78		
D	12854	REVISED PER ECO	E.E.	4-20-78	EE	
E	14154	REVISED PER ECO	MD	6/30/80	WJG	

REFERENCE INFORMATION

LETTER DESIG.	ASSEMBLY
A	LOGIC MODULE ASSY
B	VIDEO MONITOR ASSY
C	REAR PANEL ASSY
D	BASE TERMINAL
E	KYBD ASSY

REFERENCE DRAWING

COMPONENTS, EXCEPT AS NOTED

	TOLERANCE	VALUE	RATING
RES			
CAP			

CONTROL DATA

FIRST USED ON: CC555

DWN		12-2-76
CHKD		
ENGR		12/6/76
MFG		
APPR	E. N. Noe	12-10-76

TITLE: INTERCONNECTION DIAGRAM SIGNAL

CODE IDENT 15920 | C | DRAWING NO 62200946

SCALE | CROSS REF NO | SHEET 1 OF 1

62957400 J

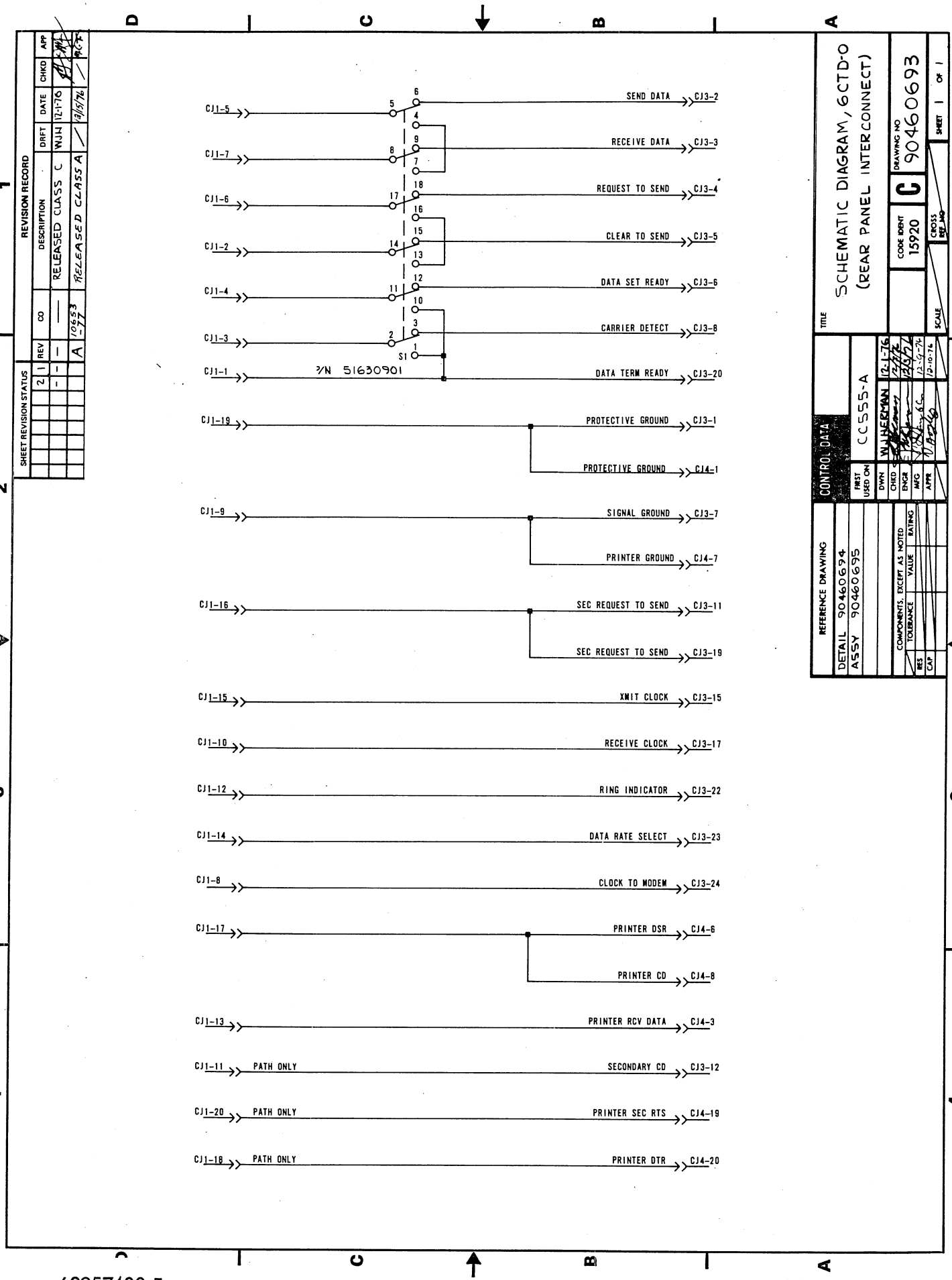
REVISION RECORD
DESCRIPTION
RELEASED CLASS C
RELEASED CLASS A
SHEET REVISION STATUS
SCHEMATIC DIAGRAM, 6CTD-0 (REAR PANEL INTERCONNECT)
CODE IDENT 15920
DRAWING NO 90460693
SHEET 1 OF 1
CONTROL DATA
CC555-A
REFERENCE DRAWING
DETAIL 90460694
ASSY 90460695
CJ1-5
CJ1-7
CJ1-6
CJ1-2
CJ1-4
CJ1-3
CJ1-1
P/N 51630901
SEND DATA
CJ3-2
RECEIVE DATA
CJ3-3
REQUEST TO SEND
CJ3-4
CLEAR TO SEND
CJ3-5
DATA SET READY
CJ3-6
CARRIER DETECT
CJ3-8
DATA TERM READY
CJ3-20
CJ1-19
PROTECTIVE GROUND
CJ3-1
PROTECTIVE GROUND
CJ4-1
CJ1-9
SIGNAL GROUND
CJ3-7
PRINTER GROUND
CJ4-7
CJ1-16
SEC REQUEST TO SEND
CJ3-11
SEC REQUEST TO SEND
CJ3-19
CJ1-15
XMIT CLOCK
CJ3-15
CJ1-10
RECEIVE CLOCK
CJ3-17
CJ1-12
RING INDICATOR
CJ3-22
CJ1-14
DATA RATE SELECT
CJ3-23
CJ1-8
CLOCK TO MODEM
CJ3-24
CJ1-17
PRINTER DSR
CJ4-6
PRINTER CD
CJ4-8
CJ1-13
PRINTER RCV DATA
CJ4-3
CJ1-11
PATH ONLY
SECONDARY CD
CJ3-12
CJ1-20
PATH ONLY
PRINTER SEC RTS
CJ4-19
CJ1-18
PATH ONLY
PRINTER DTR
CJ4-20

SHEET REVISION STATUS			REVISION RECORD						
2	1	REV	CO	DESCRIPTION	DRFT	DATE	CHKD	APP
A	A	A	14490-16	RELEASED				
B	B	B	CD13505	REVISED PER ECO	TG	6-1-79		
C	C	C	CD13647	REVISED PER ECO	WJH	8-29-79		
D	D	D	14001	REVISED PER ECO	EE	5/6/80	EE	
E	E	E	14455	REVISED PER ECO	EE	1/9/81	EE	
F	F	F	14708	R32A WAS 150	WJG	6-15-81	WJG	

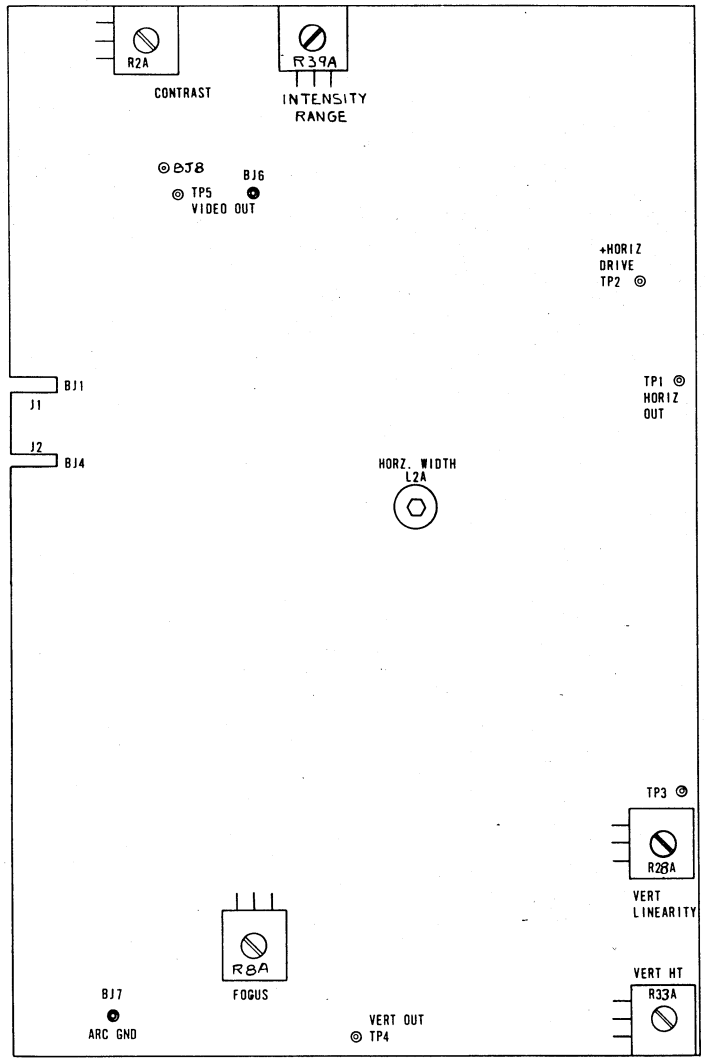

REFERENCE DRAWING				ENGR. DATA		
				FIRST USED ON	CC 5B1	
				DWN		
				CHKD		
COMPONENTS, EXCEPT AS NOTED				ENGR	[illegible]	3-28-78
	TOLERANCE	VALUE	RATING	MFG	[illegible]	3-28-78
RES	5%	OHMS	1/4W	APPR	[illegible]	3-28-78
CAP						

TITLE
LOGIC DIAGRAM, (6BND-0)
VIDEO DISPLAY ELECTRONICS
NON COMPOSITE VIDEO

CODE IDENT		DRAWING NO
15920	C	62201017

SCALE	CROSS REF NO	SHEET 1 OF 2
———		

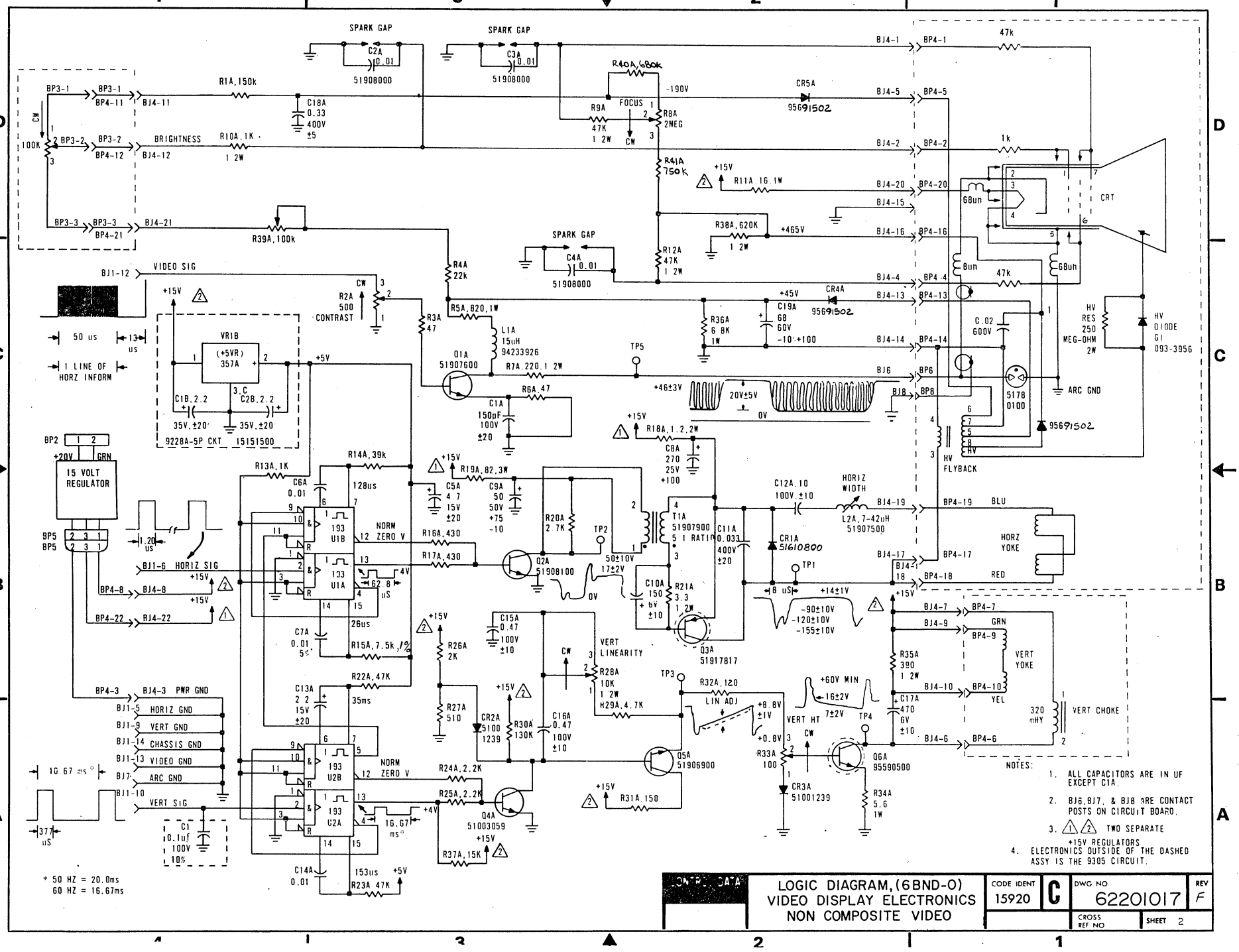

NOTES:
1. ALL CAPACITORS ARE IN UF EXCEPT C1A.
2. BJ6,BJ7, & BJ8 ARE CONTACT POSTS ON CIRCUIT BOARD.
3. ① ② TWO SEPARATE +15V REGULATORS.
4. ELECTRONICS OUTSIDE OF THE DASHED ASSY IS THE 9305 CIRCUIT.

CONTROL DATA	LOGIC DIAGRAM,(6BND-0) VIDEO DISPLAY ELECTRONICS NON COMPOSITE VIDEO	CODE IDENT 15920	C	DWG NO 62201017 REV F
		CROSS REF NO		SHEET 2

SHEET REVISION STATUS					REVISION RECORD						
4	3	2	1	REV	CO	DESCRIPTION	DRFT	DATE	CHKD	APP
—	—	—	—	—	——	RELEASED CLASS "C"	JM	8-30-76		
A	A	A	A	A	0653-67	RELEASED CLASS A		10/19/76		
A	B	A	B	B	CD11747	REVISED PER ECO				
A	C	C	C	C	CD11926	REVISED PER ECO		4-21-77		
C	D	C	D	D	CD12492	REVISED PER ECO	JM	10/17/77		
C	E	C	E	E	CD13505	REVISED PER ECO	TG	5-31-79		218
C	F	C	F	F	13647	REVISED PER ECO	WJA	8-29-79		
C	G	C	G	G	14001	REVISED PER ECO	EE	5/5/80		
C	H	C	H	H	4708	R32A WAS 150	WJG	6-15-81	WJG	

NOTES:

1. UNLESS OTHERWISE SPECIFIED POWER AND GROUND PINS OF INTEGRATED CIRCUITS ARE AS LISTED BELOW
   14 PIN INTEGRATED CKTS: PIN 14 = +5V, PIN 7 = GND
   16 PIN INTEGRATED CKTS: PIN 16 = +5V, PIN 8 = GND

REFERENCE DRAWING
DETAIL 90421300
ASSY 90460619

COMPONENTS, EXCEPT AS NOTED			
	TOLERANCE	VALUE	RATING
RES	5%	OHMS	1.4W
CAP	10%	μf	100V

CONTROL DATA		
FIRST USED ON	CC6B1	
DWN	J. MALMQUIST	8-30 76
CHKD		9-4-76
ENGR		10-4-76
MFG		10-19-76
APPR		10-19-76

TITLE
SCHEMATIC DIAGRAM 6BND-0
(N.T.S. COMPOSITE VIDEO BOARD)

CODE IDENT		DRAWING NO
15920	C	90460618

SCALE —— CROSS REF NO —— SHEET 1 OF 4

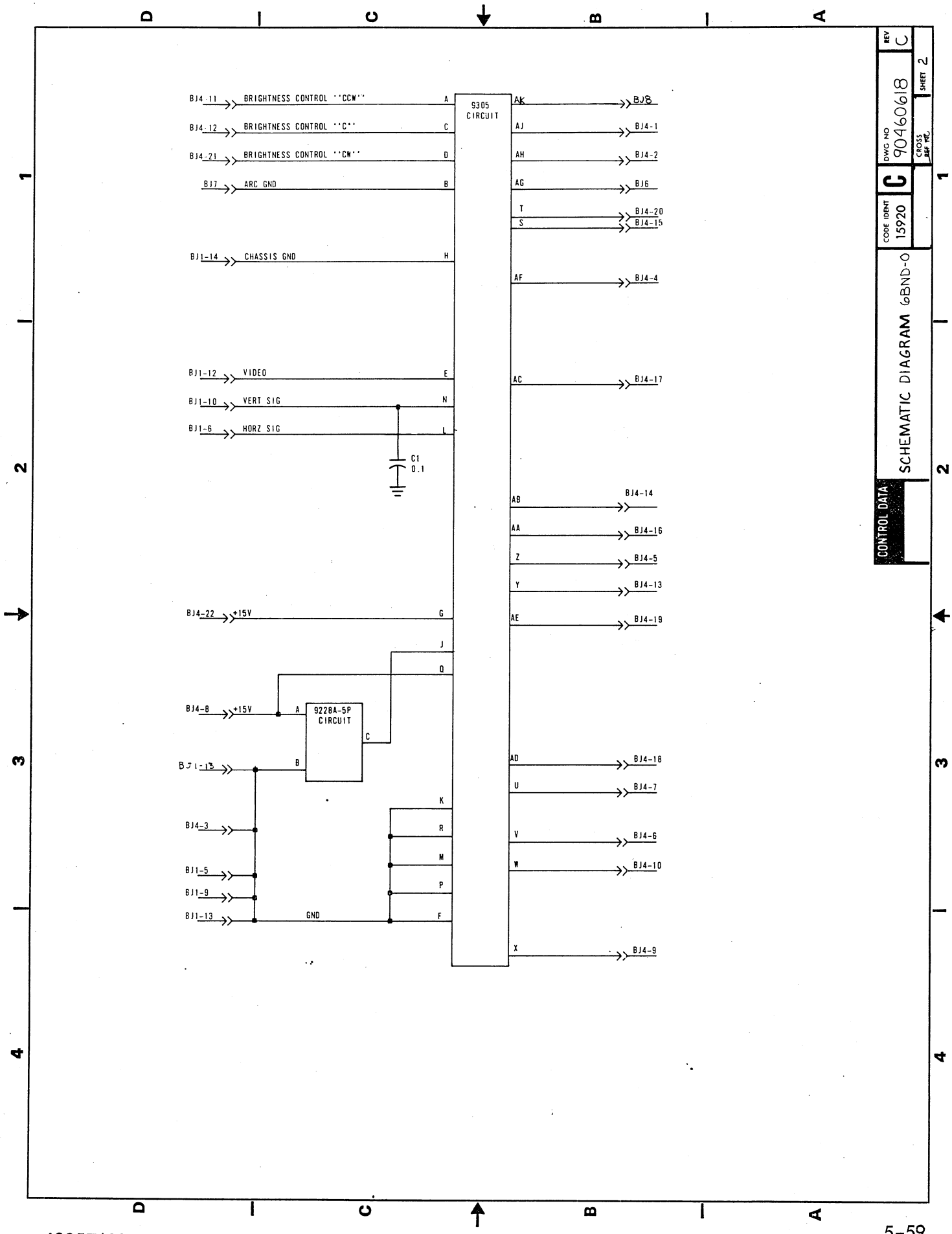

BJ4-11 BRIGHTNESS CONTROL ''CCW'' A
BJ4-12 BRIGHTNESS CONTROL ''C'' C
BJ4-21 BRIGHTNESS CONTROL ''CW'' D
BJ7 ARC GND B
BJ1-14 CHASSIS GND H
BJ1-12 VIDEO E
BJ1-10 VERT SIG N
BJ1-6 HORZ SIG L
C1 0.1
BJ4-22 +15V G
J
Q
BJ4-8 +15V A
9228A-5P CIRCUIT
C
BJ1-13 B
BJ4-3
BJ1-5
BJ1-9
BJ1-13 GND F
K
R
M
P
9305 CIRCUIT
AK BJ8
AJ BJ4-1
AH BJ4-2
AG BJ6
T BJ4-20
S BJ4-15
AF BJ4-4
AC BJ4-17
AB BJ4-14
AA BJ4-16
Z BJ4-5
Y BJ4-13
AE BJ4-19
AD BJ4-18
U BJ4-7
V BJ4-6
W BJ4-10
X BJ4-9
CONTROL DATA
SCHEMATIC DIAGRAM 6BND-0
CODE IDENT 15920
C
DWG NO 90460618
REV C
CROSS REF NO
SHEET 2

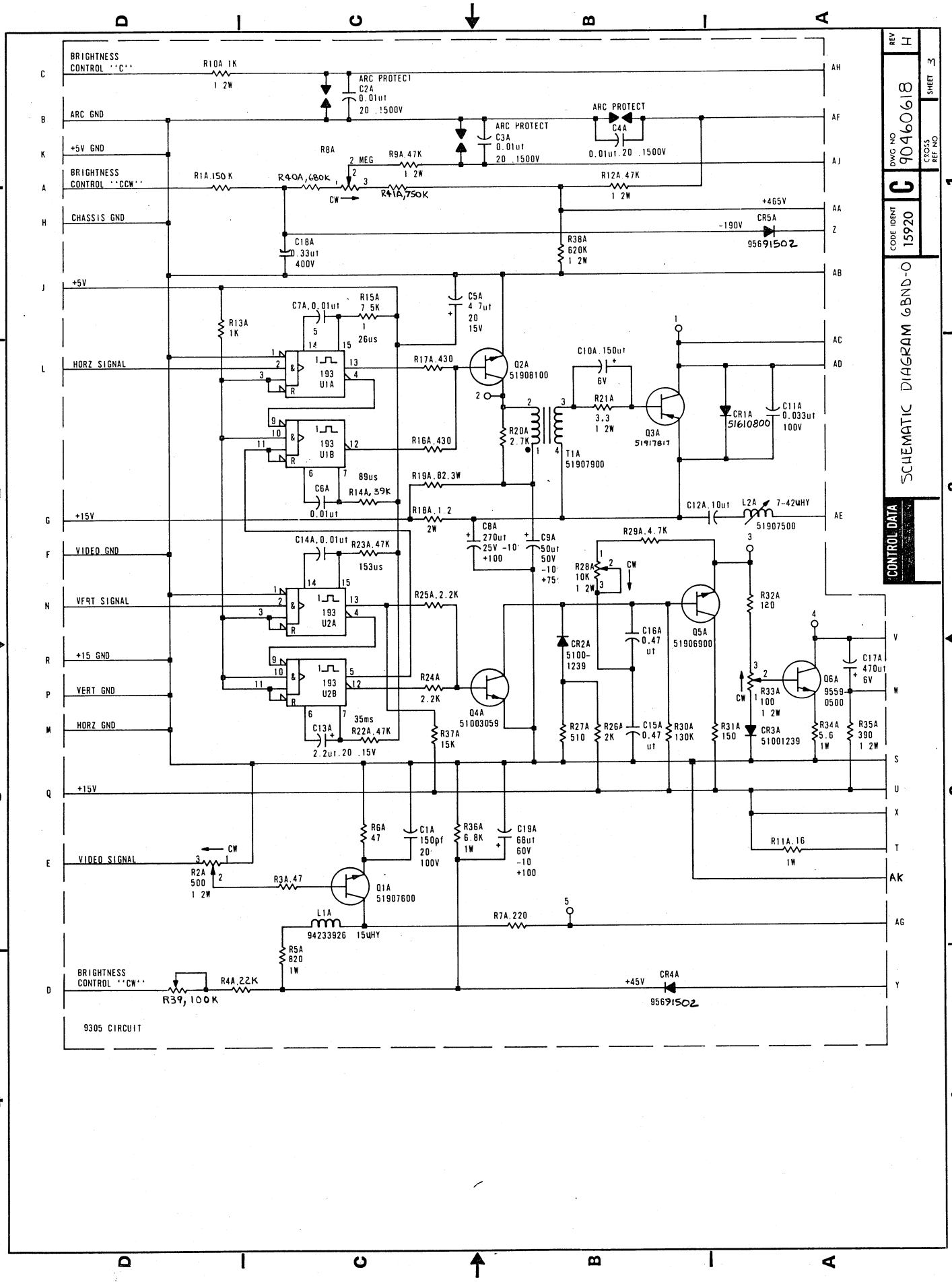
BRIGHTNESS CONTROL "C"
R10A 1K 1 2W
ARC PROTECT C2A 0.01ut 20 1500V
ARC GND
ARC PROTECT C3A 0.01ut 20 1500V
ARC PROTECT C4A 0.01ut 20 1500V
+5V GND
R8A 2 MEG
R9A 47K 1 2W
BRIGHTNESS CONTROL "CCW"
R1A 150K
R40A, 680K
CW
R41A, 750K
R12A 47K 1 2W
+465V
CHASSIS GND
-190V
CR5A 95691502
C18A 0.33ut 400V
R38A 620K 1 2W
+5V
C7A, 0.01ut
R15A 7.5K 1 26us
C5A 4.7ut 20 15V
R13A 1K
HORZ SIGNAL
U1A 193
R17A, 430
Q2A 51908100
C10A, 150ut 6V
R21A 3.3 1 2W
Q3A 51917817
CR1A 51610800
C11A 0.033ut 100V
U1B 193
R16A, 430
R20A 2.7K
T1A 51907900
89us
C6A 0.01ut
R14A, 39K
R19A, 82.3W
+15V
R18A, 1.2 2W
C12A, 10ut
L2A 7-42UHY 51907500
C8A 270ut 25V -10 +100
C9A 50ut 50V -10 +75
VIDEO GND
C14A, 0.01ut
R23A, 47K
153us
R29A, 4.7K
R28A 10K 1 2W
CW
VERT SIGNAL
U2A 193
R25A, 2.2K
Q5A 51906900
R32A 120
CR2A 5100-1239
C16A 0.47 ut
+15 GND
VERT GND
U2B 193
R24A 2.2K
Q4A 51003059
C17A 470ut 6V
Q6A 9559 0500
R33A 100 1 2W
HORZ GND
35ms
C13A 2.2ut, 20 15V
R22A, 47K
R37A 15K
R27A 510
R26A 2K
C15A 0.47 ut
R30A 130K
R31A 150
CR3A 51001239
R34A 5.6 1W
R35A 390 1 2W
+15V
R6A 47
C1A 150pf 20 100V
R36A 6.8K 1W
C19A 68ut 60V -10 +100
R11A, 16 1W
VIDEO SIGNAL
CW
R2A 500 1 2W
R3A, 47
Q1A 51907600
L1A 94233926 15UHY
R7A, 220
R5A 820 1W
BRIGHTNESS CONTROL "CW"
R39, 100K
R4A, 22K
+45V
CR4A 95691502
9305 CIRCUIT
REV H
DWG NO 90460618
SHEET 3
CODE IDENT C 15920
CROSS REF NO
SCHEMATIC DIAGRAM GBND-O
CONTROL DATA

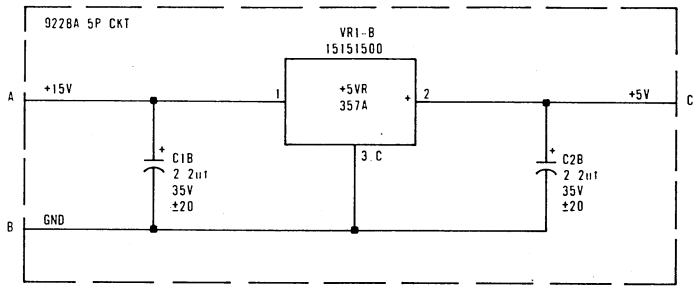

CONTROL DATA

SCHEMATIC DIAGRAM 6BND

CODE IDENT 15920 | C | DWG NO 90460618 | REV C | SHEET 4 | CROSS REF NO

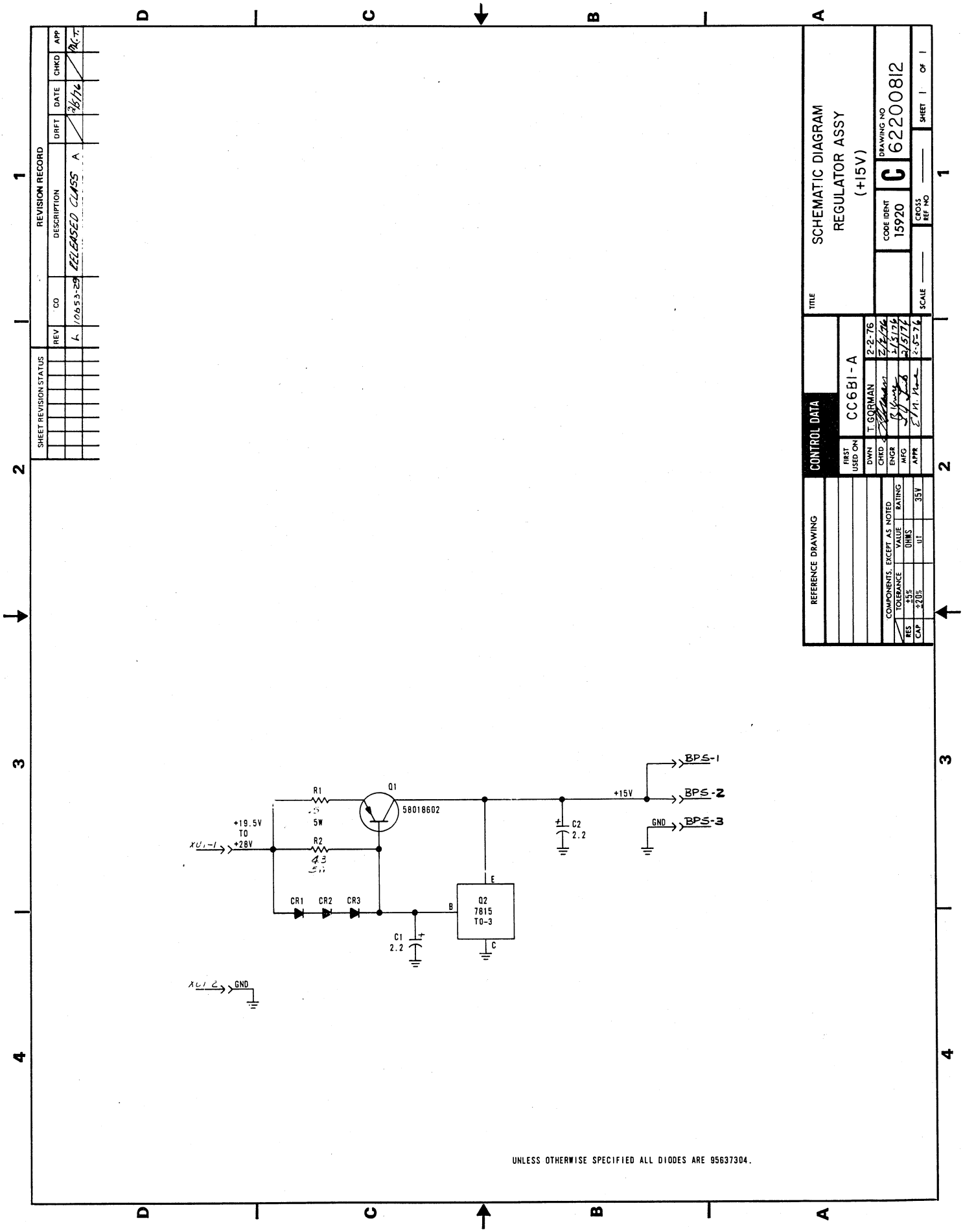
REVISION RECORD
SHEET REVISION STATUS
REV
CO
DESCRIPTION
DRFT
DATE
CHKD
APP
A
10653-29
RELEASED CLASS A
2/5/76
TITLE
SCHEMATIC DIAGRAM
REGULATOR ASSY
(+15V)
CODE IDENT
15920
C
DRAWING NO
62200812
SCALE
CROSS REF NO
SHEET 1 OF 1
CONTROL DATA
FIRST USED ON
CC6B1-A
DWN
T. GORMAN
2-2-76
CHKD
ENGR
MFG
APPR
REFERENCE DRAWING
COMPONENTS, EXCEPT AS NOTED
TOLERANCE
VALUE
RATING
RES
±5%
OHMS
CAP
±20%
ut
35V
R1
.5
5W
Q1
58018602
R2
43
5W
+19.5V
TO
+28V
CR1
CR2
CR3
C1
2.2
Q2
7815
TO-3
E
B
C
C2
2.2
+15V
GND
BPS-1
BPS-2
BPS-3
GND
UNLESS OTHERWISE SPECIFIED ALL DIODES ARE 95637304.

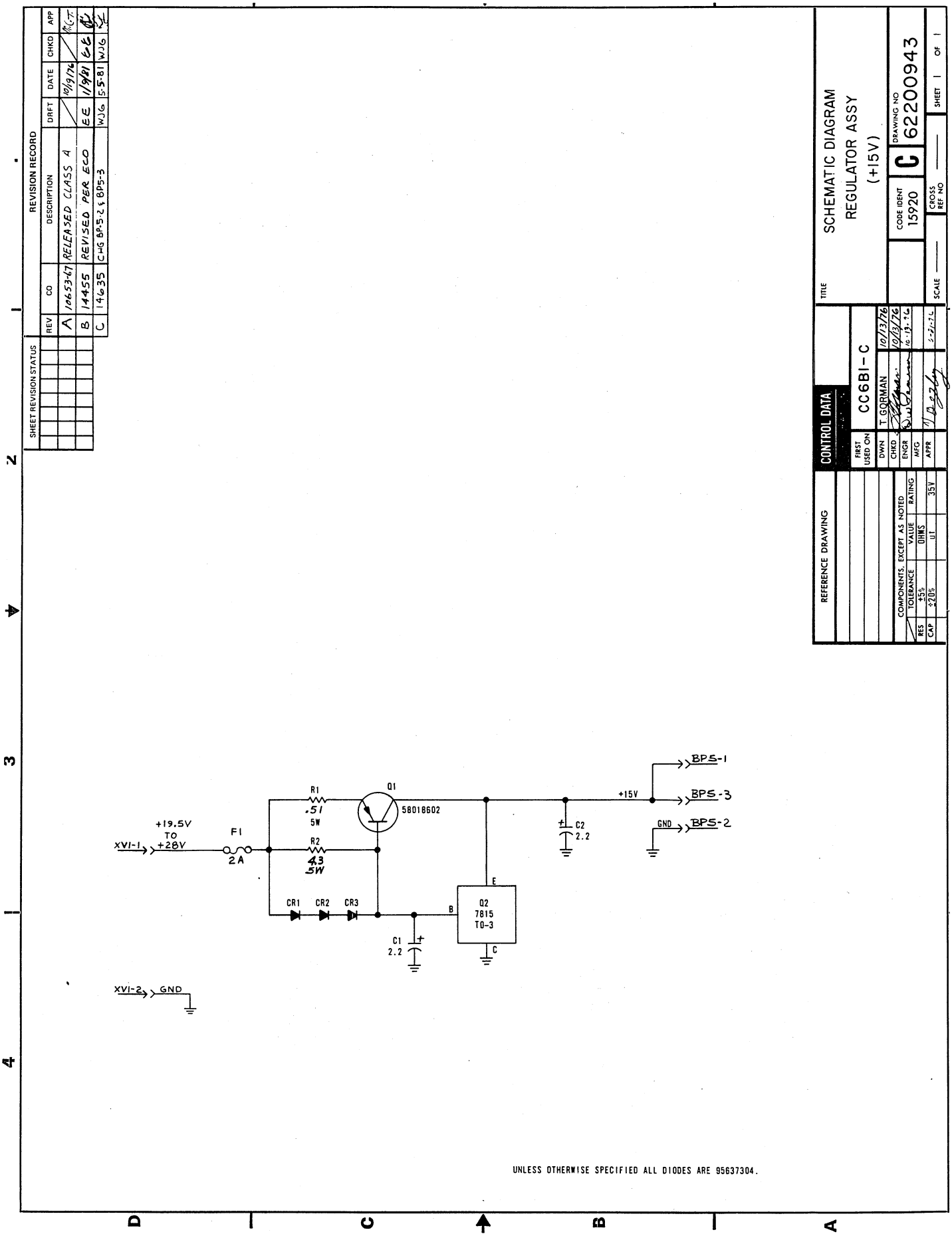

REVISION RECORD
SHEET REVISION STATUS
REV | CO | DESCRIPTION | DRFT | DATE | CHKD | APP
A | 10653-67 | RELEASED CLASS A | | 10/9/76
B | 14455 | REVISED PER ECO | EE | 1/9/81
C | 14635 | CHG BP5-2 & BP5-3 | WJG | 5-5-81 | WJG
TITLE
SCHEMATIC DIAGRAM
REGULATOR ASSY
(+15V)
CODE IDENT 15920
C
DRAWING NO 62200943
SCALE
CROSS REF NO
SHEET 1 OF 1
CONTROL DATA
FIRST USED ON CC6BI-C
DWN T. GORMAN 10/13/76
CHKD 10/13/76
ENGR 10-13-76
MFG
APPR
REFERENCE DRAWING
COMPONENTS, EXCEPT AS NOTED
TOLERANCE VALUE RATING
RES ±5% OHMS
CAP ±20% uf 35V
+19.5V TO +28V
XVI-1
F1
2A
R1
.51
5W
R2
43
5W
Q1
58018602
CR1 CR2 CR3
C1
2.2
Q2
7815
TO-3
E
B
C
C2
2.2
+15V
GND
BP5-1
BP5-3
BP5-2
XVI-2
GND
UNLESS OTHERWISE SPECIFIED ALL DIODES ARE 95637304.

DIAGRAM 120-0200
SHEET 1

This diagram sheet shows all the circuitry of the keyboard PC board, except the encoded keyswitch matrix.

ENCODING CIRCUITS (programmed read-only memory U1, dual flip-flop U10, and data output gates) — When an encoded key is pressed, this circuitry generates the data code that is appropriate for current keying operations. In doing this, programmed read-only memory (PROM) U1 uses its shift and control inputs in conjunction with its X/Y inputs to produce the code for the pressed encoded key. The characteristics of the shift and control inputs are:

- SHIFT input — normally inactive low except when the SHIFT LOCK or either SHIFT key is in use. Pressing the SHIFT LOCK key the first time latches the shift input active high via flip-flops U10. The first flip-flop (the one tied to SHIFT LOCK) receives a clock pulse every 6 ms and pressing SHIFT LOCK makes the flip-flop clock clear. The second flip-flop then clocks set to light the SHIFT LOCK key indicator and raise the shift input. After release of SHIFT LOCK, the first flip-flop clocks set again. The second flip-flop, however, remains set until it direct clears when one of the SHIFT keys are pressed, or clocks clear when SHIFT LOCK is pressed a second time.

- Control input — normally inactive low except when the CONTROL key is in use.

The code produced by the PROM appears on its B1 through B8 parallel outputs. All bits of the code are complementary and require inversion before they are input to the terminal on the 2^0 through 2^7 lines. However, if the code is 60 through $7E_{16}$ (one of the 27 lowercase alphabetical or five special-symbol codes), inversion of the PROM B6 output is dependent on the 64/96 character selection. Each time a 60 through 7E code is generated, PROM output B9 goes high. This allows the NAND gate tied to B9 to be made or not made by the 64/96 character selection. If character selection is 96 (64/96 switch open or 64/96 input signal high), the NAND gate is not made and the complementary B6 output is inverted as it goes on the 2^5 line. With 64 character selection, the NAND gate is made, causing the B6 output to be noninverted on the 2^5 line. Without B6 inversion, the lowercase code becomes the corresponding uppercase code (that is, lowercase a = 01100001_2 with bit 2^5 a 1; uppercase A = 01000001_2 with bit 2^5 a 0).

6 ms MULTIVIBRATOR (B-half of dual retriggerable multivibrator U2) — This multivibrator fires successively every 6 ms to provide the clock pulse to U2-11.

DATA READY CIRCUITS (PROM U1, A-half of dual retriggerable multivibrator U2, dual retriggerable multivibrator U3, and associated gates) — These circuits issue an active low Data Ready signal to the terminal when a keyboard data code is generated. In their idle state, the 500-ms multivibrator fires constantly, keeping the 66-ms multivibrator clear. This permits the 14-µs multivibrator, which activates Data Ready, to fire when the PROM data ready output goes active low. The PROM lowers its data ready output after the code for the pressed encoded key is on its B1 through B8 outputs. If a repeat condition does not exist, the firing of the 14-µs multivibrator, triggered by the PROM data ready output, completes the operation.

A repeat condition exists when the pressed encoded key is one that is typamatic and the CONTROL key is not in use or when the REPEAT key is being pressed in conjunction with an encoded key. The following paragraphs describe the additional circuit operations that occur under these circumstances.

Typamatic key pressed and CONTROL key not in use — when an encoded key (typamatic or not) is pressed, PROM output AKD goes high throughout key depression. If the pressed key is typamatic and the CONTROL key is not in use, a high on PROM output B10 accompanies the PROM code and data ready output for the key. With PROM outputs B10 and AKD high, firing of the 500-ms multivibrator stops when the present 500-ms firing period is complete; that is, if the key is still pressed (AKD still high). Otherwise, the 500-ms multivibrator continues firing and no repeat of Data Ready will occur.

Stopping the 500-ms multivibrator firing allows the 66-ms multivibrator to start successive firing. At the end of each 66-ms firing period, the 16-µs multivibrator is triggered to fire, making the Data Ready signal active low. This repeated issue of Data Ready every 66 ms continues until the 500-ms multivibrator fires when the key is released.

REPEAT key pressed in conjunction with an encoded key — in this case, the 500-ms multivibrator direct clears as both keys are pressed. Thus the successive firing of the 66-ms multivibrator starts without a delay. The original issue of Data Ready is then followed by a repeated issue every 66 ms until one of the keys is released.

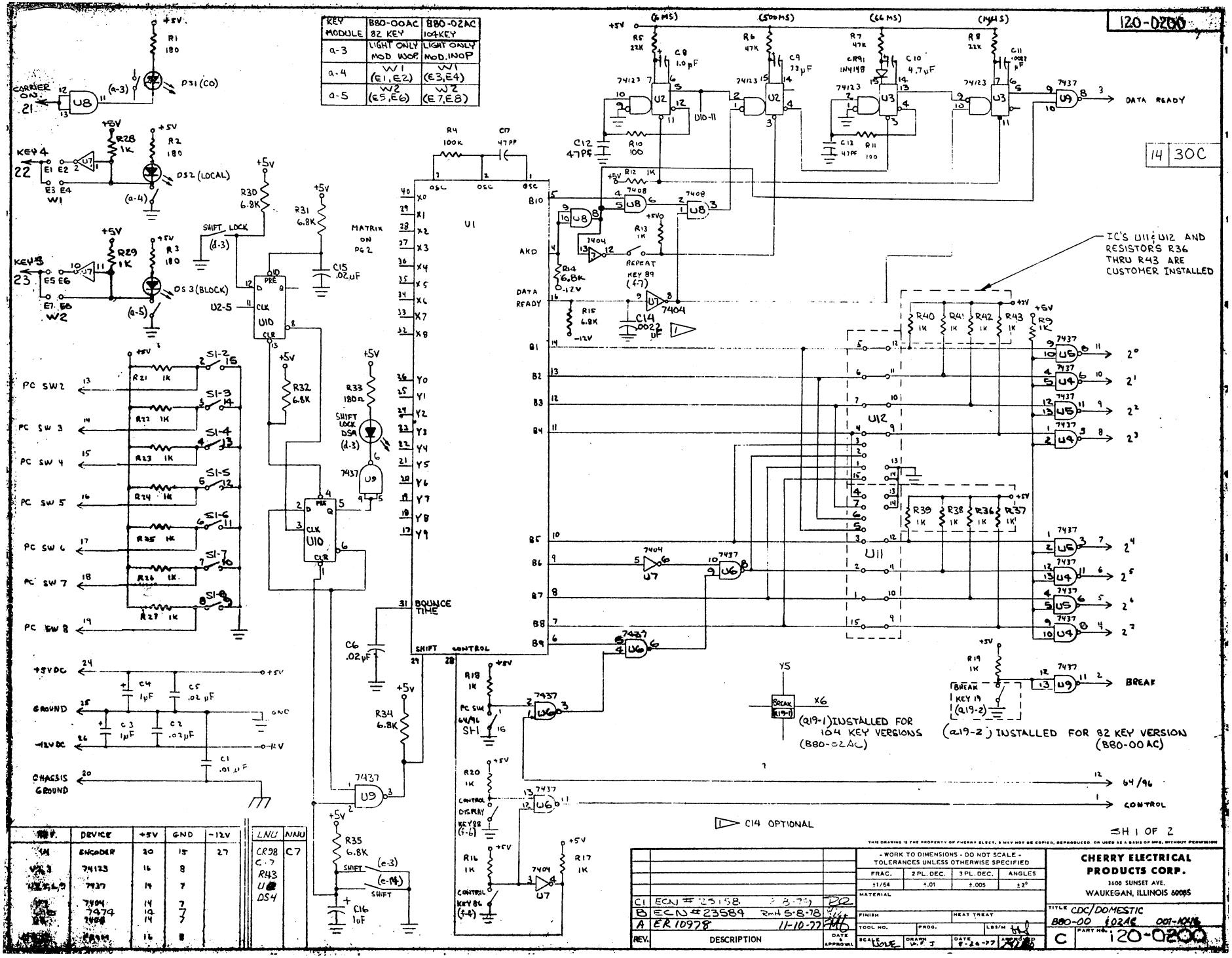

KEY MODULE	B80-00AC 82 KEY	B80-02AC 104 KEY
a-3	LIGHT ONLY MOD INOP	LIGHT ONLY MOD. INOP
a-4	W1 (E1, E2)	W1 (E3, E4)
a-5	W2 (E5, E6)	W2 (E7, E8)

REF.	DEVICE	+5V	GND	-12V
U1	ENCODER	30	15	27
U2, 3	74123	16	8	
U4, 5, 6, 9	7437	14	7	
U7	7404	14	7	
U8	7474	14	7	
U10, 11	7408	14	7	
U12	PROM	16	8	

CNU	NNU
CR98	C7
C7	
R43	
U	
DS4	

DIAGRAM 120-0200

SHEET 2

This diagram sheet shows the encoded keyswitch matrix of the PC board.

ENCODED KEYSWITCH MATRIX — This circuit feeds the U1 PROM (sheet 1) with an X/Y input that distinguishes which encoded key is being pressed during keying. With no encoded key pressed, all X inputs to the PROM are high and all Y inputs are low. When an encoded key is pressed, the matrix circuit path at that X/Y coordinate is completed. This results in a low appearing on the corresponding X input; a high on the corresponding Y input.

120-0200

14 | 30c

TYP. KEY MODULE

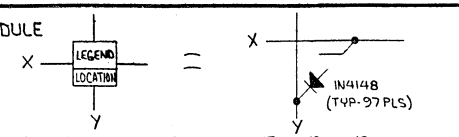

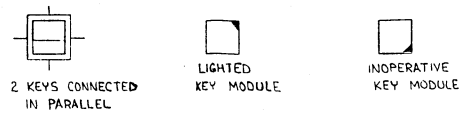

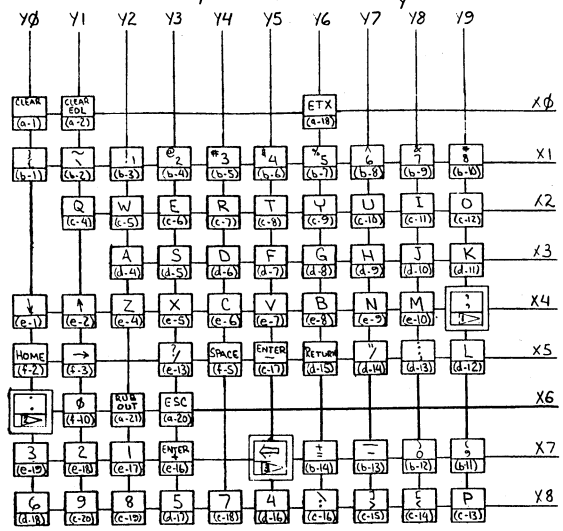

1 (e-11) & (f-9) ARE PARALLEL
2 (e-12) & (f-11) ARE PARALLEL
3 (b-15) & (f-1) ARE PARALLEL

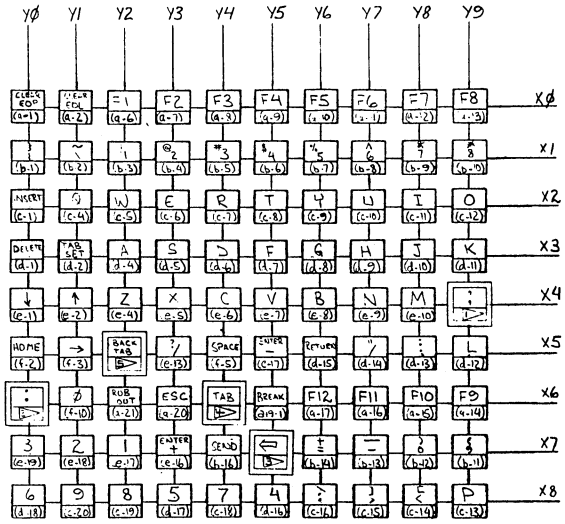

1 (e-11) & (f-9) ARE PARALLEL
2 (e-12) & (f-11) ARE PARALLEL
3 (b-15) & (f-1) ARE PARALLEL
4 (c-3) & (f-8) ARE PARALLEL
5 (c-2) & (e-15) ARE PARALLEL

KEY LOCATIONS
CDC P/N 51917735 82 KEY CONFIGURATION (B80-00AC)

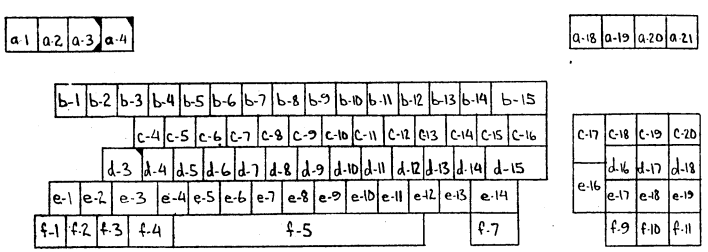

KEY LOCATIONS (B80-02AC)
CDC P/N 51917737 104 KEY CONFIGURATION

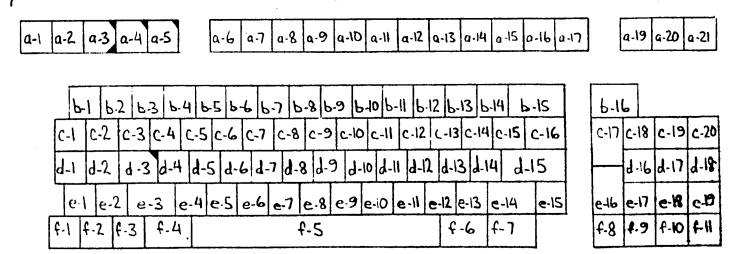

SH 2 OF 2

THIS DRAWING IS THE PROPERTY OF CHERRY ELECT. & MAY NOT BE COPIED, REPRODUCED, OR USED AS A BASIS OF MFG. WITHOUT PERMISSION

REV.	DESCRIPTION	DATE & APPROVAL
	SEE SHEET 1	

- WORK TO DIMENSIONS - DO NOT SCALE -
TOLERANCES UNLESS OTHERWISE SPECIFIED

FRAC.	2 PL. DEC.	3 PL. DEC.	ANGLES
±1/64	±.01	±.005	±2°

MATERIAL
FINISH | HEAT TREAT
TOOL NO. | PROG. | LGS/M
SCALE NONE | DRAWN | DATE 10-14-77 | APPROVED

CHERRY ELECTRICAL PRODUCTS CORP.
3600 SUNSET AVE.
WAUKEGAN, ILLINOIS 60085

TITLE CDC/DOMESTIC B80-00 02AC 001-1046

C | PART NO. 120-0200

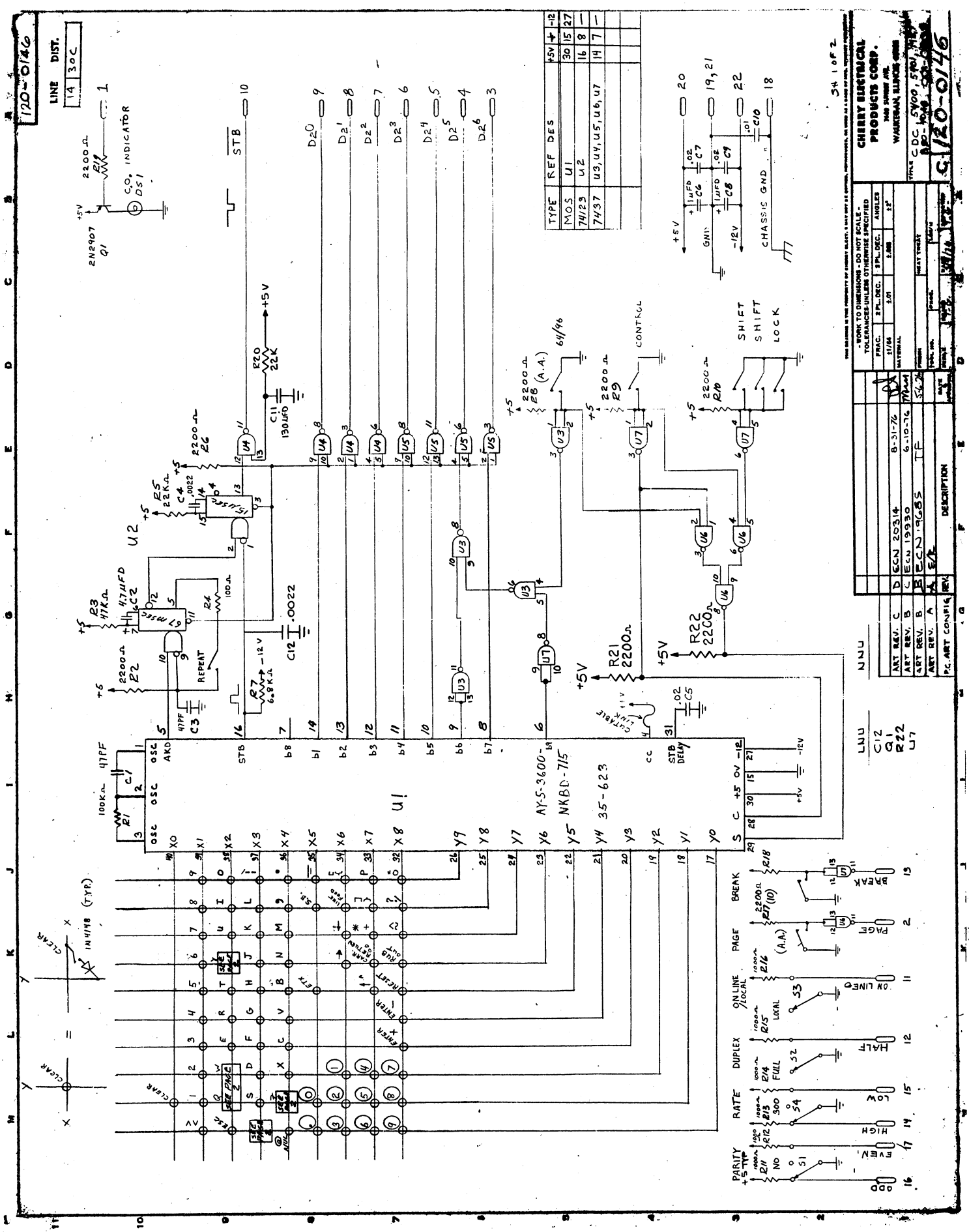
120-0146
LINE DIST.
14 30C
TYPE REF DES +5V +12
MOS U1 30 15 27
74123 U2 16 8 —
74137 U3, U4, U5, U6, U7 14 7 —
CHERRY ELECTRICAL PRODUCTS CORP.
WAUKEGAN, ILLINOIS
CDC 5400, 5401, 7427
C 120-0146
SH 1 OF 2
- WORK TO DIMENSIONS - DO NOT SCALE -
TOLERANCES UNLESS OTHERWISE SPECIFIED
FRAC. ±1/64
2 PL. DEC. ±.01
3 PL. DEC. ±.005
ANGLES ±2°
MATERIAL
FINISH
HEAT TREAT
TOOL NO.
DATE
SCALE
DESCRIPTION
ART REV. C D ECN 20314 8-31-76
ART REV. B C ECN 19930 6-10-76
ART REV. A B ECN 19685 TF
P.C. ART CONFIG REV.
NNU
LNU
C12
Q1
R22
U7
U1
AY-5-3600-
NKBD-715
35-623
U2
STB
CONTROL
SHIFT
SHIFT LOCK
CHASSIS GND
CO. INDICATOR
2N2907
Q1
BREAK
PAGE
ON LINE /LOCAL
DUPLEX
RATE
PARITY
ODD
EVEN
HIGH
LOW
HALF
ON LINE
LOCAL
FULL
CLEAR
CUTABLE LINK
REPEAT
+5V
-12V

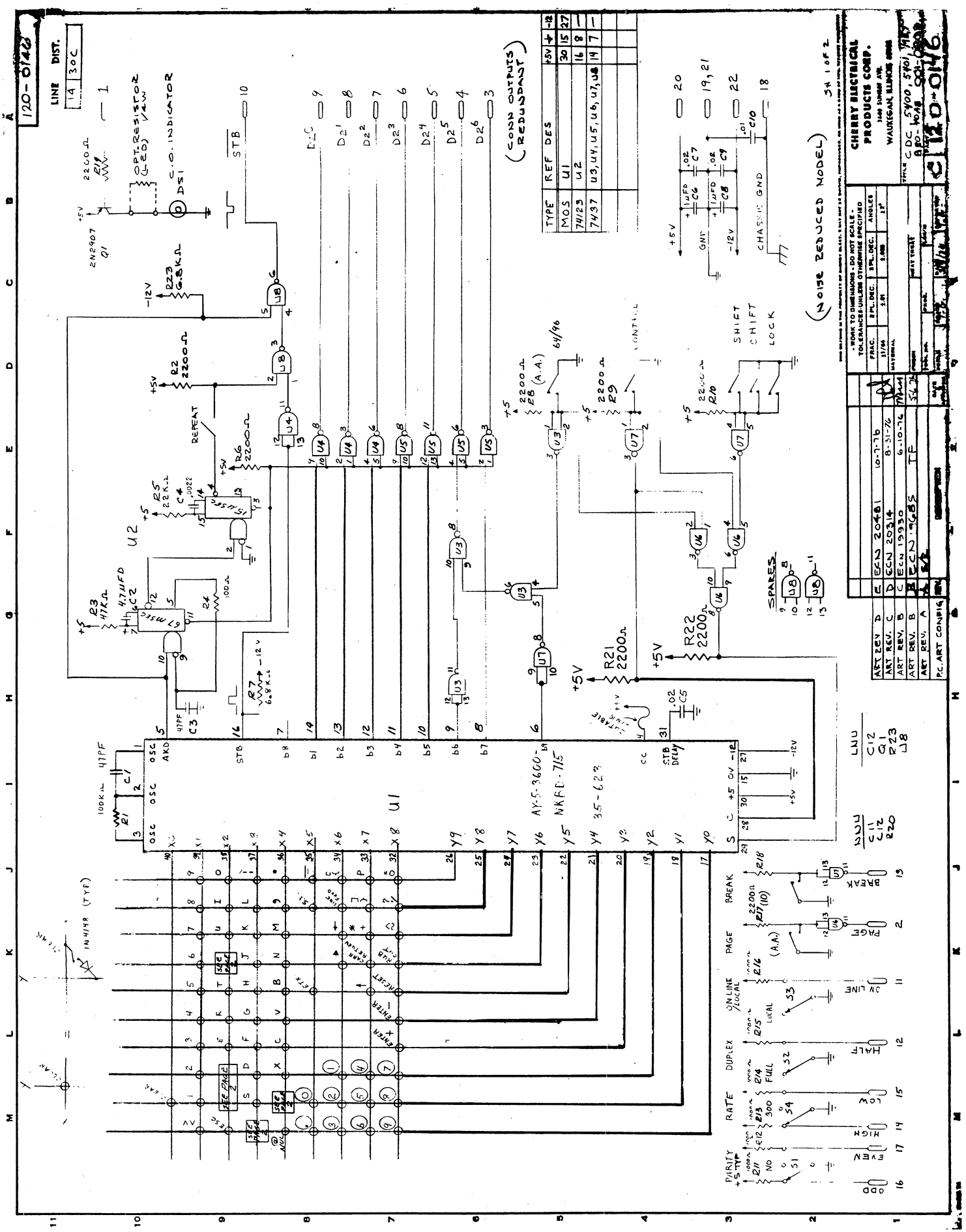
120-0146
LINE DIST.
14 30C
(CONN OUTPUTS REDUNDANT)
TYPE REF DES +5V +12
MOS U1 30 15 27
74123 U2 16 8 —
7437 U3, U4, U5, U6, U7, U8 14 7 —
(NOISE REDUCED MODEL)
CHERRY ELECTRICAL PRODUCTS CORP.
WAUKEGAN, ILLINOIS
CDC 5400, 5401, 5402
120-0146
SH 1 OF 2
ART REV D ECN 20481 10-7-76
ART REV. C ECN 20314 8-31-76
ART REV. B ECN 19930 6-10-76
ART REV. A ECN 19685 TF
P.C. ART CONFIG
SPARES
SHIFT
SHIFT LOCK
CONTROL
CHASSIS GND
OPT. RESISTOR (LED) 1/4W
C.O. INDICATOR
STB
REPEAT
U1
U2
AY-5-3600-
NKRD-715
35-623
PARITY
RATE
DUPLEX
ON LINE /LOCAL
PAGE
BREAK
ODD
EVEN
HIGH
LOW
HALF
FULL
ON LINE
LOCAL
PAGE
BREAK
LNU
C12
Q1
R23
U8
NNU
C11
C12
R20

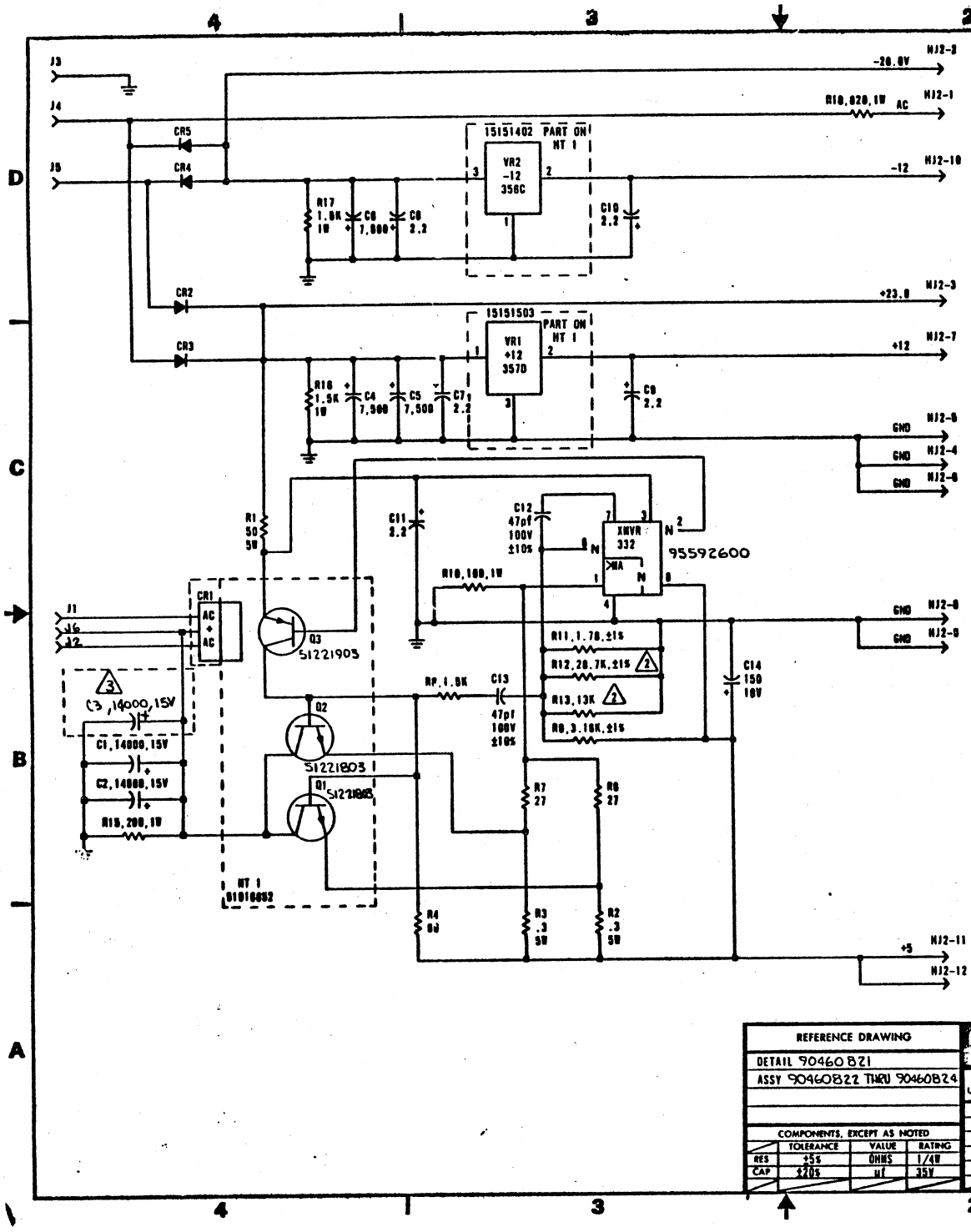

SHEET REVISION STATUS	REVISION RECORD						
	REV	CO	DESCRIPTION	DRFT	DATE	CHKD	APP
	A	12402-29	RELEASED CLASS "A"	/	2/7/78	/	ACX

NOTE:

1. UNLESS OTHERWISE SPECIFIED ALL DIODES TO BE 51610000.

2. TO SET OUTPUT TO +5.0 VOLTS ±.25 VOLTS, REMOVE R13 FOR A DECREASE OF .5 VOLT AND/OR R12 FOR A DECREASE OF .25 VOLTS.

3. C3 NOT USED ON 7BKD

REFERENCE DRAWING			
DETAIL 90460821			
ASSY 90460822 THRU 90460824			
COMPONENTS, EXCEPT AS NOTED			
	TOLERANCE	VALUE	RATING
RES	±5%	OHMS	1/4W
CAP	±20%	uf	35V

CONTROL DATA

FIRST USED ON	CC5B1	
DWN	WJ HERMAN	12-30-77
CHKD	J MALMQUIST	2-3-78
ENGR	D J Briggs	2/7/78
MFG	[illegible]	2/6/78
APPR	V. Bezley	2/7/78

TITLE

SCHEMATIC DIAGRAM, MULTI-USE MET PWR SUPPLY

CODE IDENT 15920 | C | DRAWING NO 90460818

SCALE | CROSS REF NO | SHEET | OF

62957400 G

MAINTENANCE 6

This section describes field maintenance procedures for the display terminal, which in this section is referred to as the terminal subsystem, or just terminal. This terminology is used because the display terminal operates, and is tested with, either an impact or nonimpact character printer. The section begins by suggesting an approach to emergency maintenance (field maintenance). It then lists special tools required for maintaining the terminal under the Maintenance Aids heading, and describes the preventive maintenance tasks and procedures under the Preventive Maintenance heading. These tasks and procedures are often done immediately following emergency maintenance of the terminal subsystem. The last part of this section describes diagnostic and corrective maintenance procedures, which are those procedures actually used to diagnose and correct a malfunction during an emergency maintenance call to the terminal subsystem site.

Field maintenance for this terminal subsystem uses a logical process of elimination to trace a malfunction to a field replaceable part. Once the malfunctioning part is determined, the part is replaced. The key to speedy, efficient field maintenance is the diagnostic decision logic table (DDLT). This type of table is described in greater detail later in this section.

SUGGESTED EMERGENCY MAINTENANCE PROCEDURE

The following text provides a procedure for customer engineers to follow when responding to customer complaints or request for service. Before leaving for the customer site, the customer engineer (CE) should obtain all of the information possible from the customer. This can be done by calling the customer and talking to the terminal operator or the person operating the terminal at the time the malfunction occurred. The CE should determine:

- The type of terminal that he is being called on to repair.
- The specific configuration of the terminal; for example, does it use a printer or other type of peripheral(s).
- The type of symptoms the terminal exhibited to indicate a malfunction occurred.
- Whether the terminal is operating at all at this time, and what symptoms, if any, it has when an attempt is made to operate it.

With notes that he has taken during the conversation with the terminal operator, the CE can decide what course of action to take.

- Go to the installation site and begin troubleshooting.
- Deduce that the terminal itself is probably not at fault and that the most likely cause of the problem is either the communication lines or a power reduction or loss. In either case, the CE can notify the responsible party (common carrier or power company) of the problem.
- Decide that an error in operating procedure and not an equipment failure is probably the cause of the malfunction, and notify the customer of the correct operating procedure.

Assuming that the CE must go to the terminal site to troubleshoot, the CE can also determine a probable cause of the failure and gather the tools, manuals, and spare parts that will be needed.

Upon arriving at the customer site, the CE finds the appropriate supervisory personnel, is shown to the malfunctioning terminal, again interviews the operator or otherwise verifies the phone notes taken concerning the malfunction. The CE visually inspects the terminal to ensure proper input/output cable and power connections, verifies that a malfunction does exist, and then begins to troubleshoot the terminal equipment.

Based on what is learned during conversations with customer personnel and what is observed after arriving at the customer site, the CE normally has two courses of action: 1) begin the troubleshooting procedures from the beginning, 2) begin troubleshooting only the equipment that is suspected of having a malfunction. Once the source of a malfunction is discovered and corrected, the CE should:

- Run through the terminal subsystem checkout procedure furnished later in this section to ensure that the terminal is fully operational.
- Check the preventive maintenance task tables in this section and perform any required preventive maintenance task procedures.
- Demonstrate to the customer's satisfaction that the terminal is now operating properly and is fully operational.

CAUTION

Because many of the circuits used in this system are of the MOS integrated circuit type, always observe the rules for handling MOS type circuits as described in appendix B of this manual. Failure to do so can result in these circuits being destroyed by an excessive discharge of static electricity.

MAINTENANCE AIDS

In addition to the normal complement of hand tools and test equipment carried by the field CE, maintenance of this terminal requires a 3/32-inch nonmetallic hex driver (CRT Tuning Wand, CDC part no. 12263299). Maintenance of the impact printer may also require some special tools and equipment; these, however, are described in the Reference and Field Service Manual for the impact printer (see preface).

PREVENTIVE MAINTENANCE

Preventive maintenance describes those tasks that are performed immediately following and as part of an emergency maintenance call. Preventive maintenance task tables (PMT) and preventive maintenance task procedures (PMTP) define the particular tasks to be performed for a terminal, indicate the schedule for performing these tasks, and describe how to do these tasks.* Both PMTs and PMTPs for each equipment that can be used to configure this terminal subsystem are included in this section. While a CE is performing the PMTs and PMTPs, they should verify that the terminal operator has been performing their assigned preventive maintenance tasks. Normally, a terminal operator is only responsible for routine cleaning of equipment exterior; however, in some instances, the operator may be responsible for more complex preventive maintenance procedures. This is often determined on a per-installation basis and on the type of operator personnel used at a given installation.

KEYBOARD DISPLAY PMTs

The listing of the PMTs in table 6-1 defines the items to be performed or checked at the keyboard display each time the terminal requires repair. Do these tasks for best equipment performance and to minimize the amount of emergency maintenance calls.

CAUTION

Do not use solvents to clean the keyboard of the display terminal. Solvents can cause keyswitches to become defective.

---

* Some of the PMTPs refer to the diagnostic/corrective-maintenance procedures found later in this section. These latter procedures are designated TS1, TS2, etc. for terminal subsystem procedures; CRT1, CRT2, etc. for keyboard display procedures; NIP1, NIP2, etc. for nonimpact printer procedures; and IMP1, IMP2, etc. for impact printer procedures.

TABLE 6-1. KEYBOARD DISPLAY PMTs

ITEM	PROCEDURE	APPROXIMATE TIME (MINUTES)
1	Clean keyboard	2
2	Clean exterior surface	2
3	Clean viewing screen	2
4	Visually inspect all cables and wires for insulation breakdown or other damage	5
5	Check keycaps for signs of wear or breakage	1
6	Check for foreign objects inside cabinet	5

KEYBOARD DISPLAY PMTPs

The following text describes the PMTPs which support the preceding PMT table for the keyboard display.

CAUTION

Before working inside of the cabinet for these PMTPs, turn power off and remove ac input from site power outlet.

1) Remove dust from keyboard with a soft-bristled brush.

CAUTION

Do not use solvents or cleaning fluids.

2) Clean exterior surfaces of cabinet with a damp, lint-free cloth. Mild detergent may be used.

3) Clean face of viewing screen with a clean, soft cloth and a mild glass-cleaning solution. If a spray is used, do not allow liquid to flow off screen (it is preferable to spray cloth rather than screen).

4) Remove cabinet hood (procedure CRT5) and visually inspect all cables and wires for evidence of insulation breakdown and wear. Replace damaged wires if possible. Check electrical connections to ensure they are not loose. Check electronic components for signs of deterioration, such as overheating or aging.

5) Check keycaps for signs of wear or breakage and replace keyboard if necessary (procedure CRT4).

6) Check for foreign objects such as bits of wire or solder.

NONIMPACT PRINTER PMTs

The PMTs listed in table 6-2 are the tasks to be done at the nonimpact printer (if part of the subsystem) at the intervals specified in the table. Do these tasks for best equipment performance and to reduce repairs.

TABLE 6-2. NONIMPACT PRINTER PMTs

LEVEL (See Note 1)	ITEM	PROCEDURE	APPROXIMATE TIME (See Note 2)
1	1.1	Clean exterior surface	2
1	1.2	Inspect cabinet interior for possible loose parts	3
1	1.3	Clean cabinet interior	5
1	1.4	Inspect all cables and wires for insulation breakdown or other damage	2
1	1.5	Inspect all mechanisms for signs of excess wear	3
1	1.6	Check carefully for foreign objects inside cabinet and mechanism	2
2	2.1	Clean printhead	15
2	2.2	Clean guidebar	5
2	2.3	Lubricate platen solenoid plunger	5

Notes:

1) Level 1 tasks are those to be done each time the terminal subsystem requires repair. Level 2 tasks are required every 20 million printed characters, 500,000 line feeds, or one year, whichever occurs first. However, if foreign material is suspected on the guidebar at any time, it should be cleaned to prevent excessive carriage return time (over 200 milliseconds). Also, if printhead contamination is suspected before the normal cleaning time, it should be cleaned.

2) Approximate time given is in minutes, and is for tasks listed here only. This does not include troubleshooting/corrective maintenance procedures, which may be seen as necessary from these PMTs.

NONIMPACT PRINTER PMTPs

Following text describes the PMTPs which support the preceding PMT table for the nonimpact printer.

CAUTION

Before working inside of the cabinet for these PMTPs, turn power off and remove ac input cord from site power outlet.

The following steps describe the level 1 tasks listed in the PMT table.

1.1) Clean exterior surfaces of cabinet with damp, lint-free cloth. Mild detergent may be used. Do not use cloth so wet that water runs down into printer.

1.2) Turn the two hood-locking screws at cabinet rear 1/4-turn counter-clockwise and pull these screws back. Lift hood up from back until it will slide forward off its front holding tab. Placing the hood aside, inspect interior of cabinet for possible parts which may have worked loose from mechanism. Replace parts, or mechanism, depending on whether loose parts are reusable, replaceable, etc.

1.3) Using a soft, long-bristled brush and vacuum cleaner with a crevice tool, carefully and thoroughly clean cabinet interior of any/all paper particles, dust, etc.

1.4) Inspect all cables, wires, and connections (including input/output connector pins) for evidence of insulation breakdown or wear. Repair/replace damaged wires if possible. Check electronic components for signs of deterioration such as overheating or aging.

1.5) Look carefully at all mechanisms for signs of wear. Repair/replace worn parts if possible (use replacement procedures provided later in this section).

1.6) Inspect for foreign objects possibly lodged in crevices within the mechanism or other portions of cabinet.

The following steps describe the level 2 procedures listed in the PMT table. However, perform all level 1 tasks before doing level 2.

2.1) Clean printhead as follows:

a) Remove printhead and cable assembly from printer (procedure NIP13).

b) Using a clean, dry, stiff-bristle toothbrush, brush 10 to 15 times across printhead elements in both vertical and horizontal directions.

CAUTION

Do not use solvents or cleaning fluids.

c) Replace printhead and cable assembly in printer (procedure NIP13).

2.2) Clean guidebar as follows:

a) Using a clean, dry, lint-free cloth, wipe all four sides of the head guidebar until clean. Move carriage as necessary to access bar along entire length.

CAUTION

Do not use solvents or cleaning fluids.

b) Exercise printer for a few minutes; that is, do offline tests for non-impact printer as described in Terminal Subsystem Checkout procedure (TS6) later in this section.

2.3) Lubricate platen solenoid plunger (figure NIP7) as follows:

a) Apply three drops of lubricant, CDC part no. 62148158 or equivalent, around plunger working surface.

b) Operate plunger in and out of housing to distribute lubricant.

55-LPM IMPACT PRINTER PMTs

The PMTs listed in table 6-3 are the tasks to be done at the 55-LPM impact printer (if a part of the subsystem) at the intervals specified in the table. Do these tasks for best equipment performance and to reduce repairs.

TABLE 6-3. 55-LPM IMPACT PRINTER PMTs

LEVEL (See Note 1)	ITEM	PROCEDURE	APPROXIMATE TIME (See Note 2)
1	1.1	Clean exterior surface	3
1	1.2	Inspect cabinet interior for possible loose parts	5
1	1.3	Clean cabinet interior	5
1	1.4	Inspect all cables and wires for insulation breakdown or other damage	4
1	1.5	Inspect all mechanisms for signs of excess wear	5
1	1.6	Check carefully for foreign objects inside cabinet and mechanism	4
2	2.1	Oil drive mechanism	2
2	2.2	Grease bevel gears	2
2	2.3	Examine/replace return reel cord	2 to 10
2	2.4	Clean printhead-slide shafts	2
2	2.5	Oil format tape and forms motion motor	1
2	2.6	Use printer Test Print switch and exercise	5
2	2.7	Replace cabinet and pack tools/materials	10
3	3.1	Remove and wash printhead and then check print pins	30
3	3.2	Reinstall printhead	10
3	3.3	Use printer Test Printer switch and exercise	5
3	3.4	Replace cabinet and pack tools/materials	15

Notes:

1) Level 1 tasks are those to be done each time the terminal subsystem requires repair. Level 2 tasks are required every 13.2 million printed characters, 500 hours of power-on time, or 3 months — whichever comes first. Level 3 tasks are required every 79.2 million characters, 3000 hours of power-on time, or 18 months — whichever comes first. However, if inspection shows the level 2 or 3 tasks should be done ahead of schedule, do such tasks as seem necessary to help prevent equipment wear/misperformance.

2) Approximate time given is in minutes, and is for tasks listed here only. This does not include troubleshooting corrective maintenance procedures which may be seen as necessary from these PMTs.

55-LPM IMPACT PRINTER PMTPs

The following text describes the PMTPs which support the preceding PMT table for the 55-LPM impact printer.

CAUTION

Before working inside of the cabinet for these PMTPs, turn power off and remove ac input cord from site power outlet.

The following steps describe the level 1 tasks listed in the PMT tables for the 55-LPM impact printer.

1.1) Clean exterior surfaces of cabinet with damp, lint-free cloth. Mild detergent may be used. Do not use cloth so wet that water runs down into printer.

1.2) Remove cabinet (procedure 55IMP6). With cabinet placed aside, inspect interior cabinet base and horizontal surfaces for parts which may have worked loose from mechanism. Replace parts, or mechanism, depending on whether loose parts are reusable, replaceable, etc.

1.3) Using a soft, long-bristled brush and vacuum cleaner with a crevice tool, carefully and thoroughly clean cabinet interior of any/all paper particles, dust, etc.

1.4) Inspect all cables, wires, and connections (including input/output connector pins) for evidence of insulation breakdown or wear. Repair/replace damaged wires if possible. Check electronic components for signs of deterioration caused by overheating or aging.

1.5) Look carefully at all mechanisms for signs of wear. Repair/replace worn parts if possible (use replacement procedures provided later in this section).

1.6) Inspect for foreign objects possibly lodged in crevices within the mechanism or other portions of the equipment.

The following steps describe the level 2 tasks listed in the PMT table 6-3 (55-LPM Impact Printer). Perform all level 1 tasks before doing level 2.

2.1) Oil drive mechanism as follows:

a) Put three drops of oil, CDC part no. 95011200, in oil hole in motor support casting, figure 55IMP10.

b) Put one drop same type oil in oil hole in each support bearing (two) of drive shaft.

CAUTION

Do not allow any oil on the clutch mechanism.

2.2) Grease bevel gears as follows:

a) Smear molygrease, CDC part no. 12210957, on bevel gears of ribbon drive (figure 55IMP10) as required.

2.3) Inspect return reel cord for fraying and, if frayed, replace (procedure 55IMP17).

2.4 Clean printhead-slide shafts as follows:

a) Using a clean, dry, lint-free cloth, wipe shafts until clean. Move printhead carriage as necessary to access shafts along entire length.

CAUTION

Do not use solvents or cleaning fluids.

b) Apply four drops oil, CDC part no. 95011200, to each felt washer which rides on shafts.

c) Move printhead carriage from end-to-end of shafts several times, then wipe shafts clean again.

2.5) Oil format tape and forms motion motor as follows:

a) Apply one drop oil, CDC part no. 95011200, to oil hole for felt lubricating pad, figure 55IMP10.

2.6) Do Test Print exercise as follows:

a) See that paper is loaded (procedure 55IMP3) and ribbon is ready.

b) With power cord plugged into site power outlet, press ON/OFF switch to turn printer on.

c) Pull safety switch up (figure 55IMP10).

d) With printer offline (START/STOP switch not lit), activate Test Mode switch. Printer should continuously print alternating sets of the character "B" followed by an equal number of space characters. This should occur for a line, the paper should advance one line, and the process should continuously repeat until Test Switch is deactivated.

CAUTION

Do not allow the printer to constantly print continuous adjacent columns for more than 5 minutes maximum at a time, or solenoid assemblies will overheat and be damaged.

e) Examine printout for print quality (light or missing dots or improper character width). If any problem exists, refer to table 55IMP1, DDLT for Impact Printer.

2.7) If not doing level 3 tasks, or any other maintenance at this time, replace printer cabinet (procedure 55IMP6) and pack tools/materials.

The following steps describe the level 3 tasks listed in the PMT table. However, perform all level 1 tasks and the first five level 2 tasks before doing level 3.

3.1) Remove and wash printhead and check print pins as follows:

a) Remove printhead from printer (procedure 55IMP17).

b) Wash residue from printhead using standard isopropyl alcohol normally used for cleaning.

c) Use a magnifying device such as an eye-loupe and inspect print pins for being flush with surface of ruby guide. If not flush, return printhead to repair facility and use a replacement in the printer.

3.2) Reinstall printhead in printer (procedure 55IMP17).

3.3) Do Test Print exercise as described in level 2, step 2.6.

3.4) If no other maintenance is to be performed at this time, replace printer cabinet (procedure 55IMP6) and pack tools and materials.

70-LPM IMPACT PRINTER PMTs

The PMTs listed in table 6-4 are the tasks to be done at the impact printer (if a part of the subsystem) at the intervals specified in the table. Do these tasks for best equipment performance and to reduce repairs.

TABLE 6-4. 70-LPM IMPACT PRINTER PMTS

LEVEL (See Note 1)	ITEM	PROCEDURE	APPROXIMATE TIME (See Note 2)
1	1.1	Clean exterior surface	3
1	1.2	Inspect cabinet interior for loose parts	5
1	1.3	Clean cabinet interior	5
1	1.4	Inspect all cables and wires for insulation breakdown or other damage	4
1	1.5	Inspect all mechanisms for signs of excess wear	5
1	1.6	Check carefully for foreign objects inside cabinet and mechanism	4
2	2.1	Apply oil to oiler pad	2
2	2.2	Inspect printhead drive belt and printhead motor belt	3
2	2.3	Examine ribbon cassette drive cord	2
2	2.4	Clean printhead-slide shafts	2
2	2.5	Do test print exercise	5
2	2.6	Replace cabinet and pack tools/materials	10

Notes:

1) Level 1 tasks are those to be done each time the terminal subsystem requires repair. Level 2 tasks are required every 13.2 million printed characters or 1300 hours of power-on time, whichever comes first. However, if inspection shows Level 2 tasks should be done ahead of schedule, do them as found necessary.

2) Approximate time given is in minutes and is for tasks listed here only. This does not include corrective maintenance procedures which may be seen as necessary from these PMTs.

70-LPM IMPACT PRINTERS PMTPs

The following text describes the PMTPs which support the preceding PMT table for the 70-LPM impact printer.

CAUTION

Before working inside of the cabinet for these PMTPs, turn power off and remove ac input cord from site power outlet.

The following steps describe the level 1 tasks listed in the PMT table.

1.1) Clean exterior surfaces of cabinet with damp lint-free cloth. Mild detergent may be used. Do not use cloth so wet that water runs down into printer.

1.2) Remove cabinet (procedure 701MP6). With cabinet placed aside, inspect interior cabinet base and horizontal surfaces for parts which may have worked loose from mechanism. Replace parts, or mechanism, depending on whether loose parts are reusable, replaceable and so on.

1.3) Using a soft, long-bristled brush and vacuum cleaner with a crevice tool, carefully and thoroughly clean cabinet interior of any/all paper particles, dust and other foreign matter.

1.4) Inspect all cables, wires, and connections (including input/output connector pins) for evidence of insulation breakdown or wear. Repair/replace damaged wires if possible. Check electronic components for signs of deterioration caused by overheating or aging.

1.5) Look carefully at all mechanisms for signs of wear. Repair/replace worn parts if possible (use replacement procedures provided later in this section).

1.6) Inspect for foreign objects possibly lodged in crevices within the mechanism or other portions of the equipment.

The following steps describe the level 2 tasks listed in the PMT table. However, perform all level 1 tasks before doing level 2.

2.1) Apply three or four drops of oil (CDC part number 95370201) in hole at top of oiler pad (figure 6-1).

2.2) Inspect printhead drive belt and motor belt for fraying. If frayed, replace.

2.3) Examine ribbon cassette drive cords and, if frayed, replace (printer field service and reference manual contains procedure).

2.4) Clean printhead-slide shaft as follows:

a) Using a clean dry, lint-free cloth, wipe shafts until clean. Move printhead carriage as necessary to access shafts along entire length.

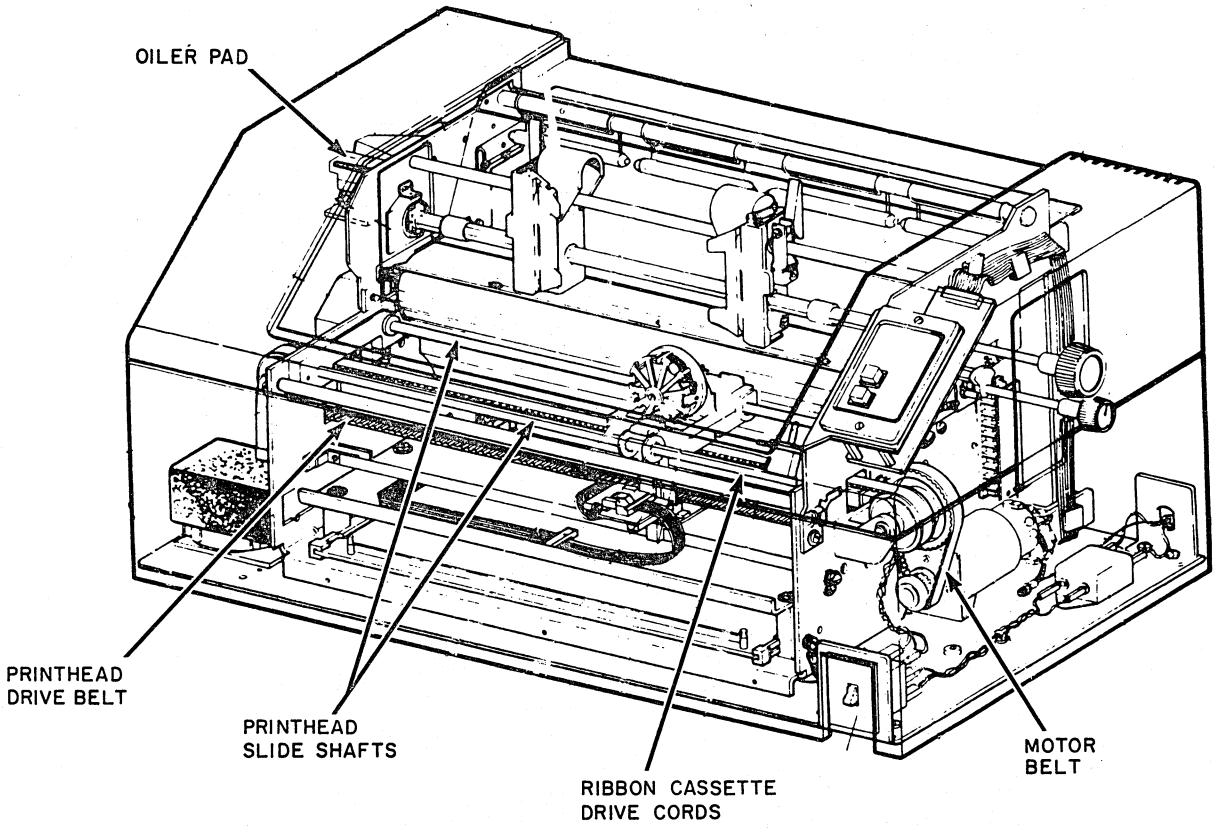

Figure 6-1. Printer Check Items

CAUTION

Do not use solvents or cleaning fluids to clean printhead.

2.5) Do test print exercise as follows:

CAUTION

Never run a test print for an extended period of time (over 2 or 3 minutes) because print-pin solenoid may be damaged.

NOTE

During regular operation, format tape loading is required whenever printer is turned on or the 6 LPI/8 LPI switch setting is changed. This, however, is not necessary in the following test print operations.

a) Check that paper is loaded properly (procedure 70IMP2).

b) With power cord plugged into site power outlet, press ON/OFF switch to turn printer on.

NOTE

To operate printer with the front cover removed, the interlock switch - to the left of the control panel - is pulled up.

c) Press TEST PRINT switch on printer control panel. Printer prints alternating groups of Bs and spaces across page with single line advances. Use this pattern to check vertical and horizontal alignment of forms.

d) Press TEST PRINT again to end test print operation.

e) Change setting of 6 LPI/8 LPI switch on vertical transducer board and press TEST PRINT. Check that printout shows new selection of vertical line spacing.

f) End printout by pressing TEST PRINT again.

g) Change setting of 10 CPI/16.5 CPI switch on vertical transducer board and press TEST PRINT. Check that printer prints 10 or 16.5 characters per inch horizontally (standard versus compressed pitch respectively).

h) Press TEST PRINT again and return the 6 LPI/8 LPI and 10 CPI/ 16.5 CPI switches to their original settings.

i) Examine test printout for print quality (light or missing dots or improper character width. If any problem exists, refer to table 701MP-1, DDLT for the impact character printer.

NOTE

At least two full pages of forms would move through tractors in the following step. To prevent this paper loss, press clutch retractor lever during format tape loading.

j) Verify that format tape is installed correctly in printer (procedure 701MP4). Press vertical transducer board LOAD EVFU switch to load form format from tape into printer memory. During the loading, tape passes through reader until two successive form-feed punchings are sensed. Then tape is automatically reread to check loaded data. When tape movement stops, load and check is complete.

k) Using clutch retractor lever and vertical forms positioning knob, align paper so printhead is at a top of form.

l) Press FORM FEED switch and see if paper advances to next top of form. If it does not, refer to table 701MP1.

2.6) Upon completion of any corrective maintenance found to be necessary, do the following:

a) Turn printer power off and unload paper forms from printer.

b) Reinstall all cabinet covers (procedure 701MP5).

c) Reload paper forms in printer (procedure 701MP2).

DIAGNOSTIC AND CORRECTIVE MAINTENANCE

Maintenance activity for a terminal subsystem falls into three general categories: preventive, diagnostic, and corrective. Preventive maintenance has already been discussed earlier in this section. This portion of the text concentrates on diagnostic and corrective maintenance. Diagnostic maintenance provides an organized means of diagnosing a malfunction and of identifying its source. Corrective maintenance consists of the procedures for correcting a diagnosed malfunction and of those procedures used to verify that the malfunction has been corrected. This terminal subsystem uses the checkout tests of procedure TS6 (Terminal Subsystem Checkout) both as a means of verifying that a malfunction exists and that a malfunction has been corrected. It uses the diagnostic decision logic tables and the procedures in this section to efficiently diagnose and correct a malfunction.

CAUTION

Because many of the circuits used in this system are of the MOS integrated circuit type, always observe the rules for handling MOS type circuits as described in appendix B of this manual. Failure to do so can result in these circuits being destroyed by an excessive discharge of static electricity.

DIAGNOSTIC TABLES

The key for isolating a subsystem malfunction to its probable cause is proper use of the cookbook-type diagnostic tables that follow. These tables, termed diagnostic decision logic tables (DDLTs), or simply decision tables, identify and isolate a malfunction in an equipment to a replaceable module, or where equipment design does not permit this approach, to a replaceable part or component. The tables present test setup and resulting symptom information in a logical, organized manner, and where necessary, they refer to procedures for testing, adjusting, or replacing a suspect component. References to procedures are also made in a sequenced manner so that they refer to the easiest procedure or most likely cause first and progress to the most difficult procedure or least likely cause. To further facilitate use of the decision tables and their associated procedures, they are grouped in the following manner:

- Terminal subsystem (TS) tables and procedures
- Keyboard display terminal (CRT) tables and procedures
- Nonimpact printer (NIP) tables and procedures
- Impact printers (IMP) tables and procedures

The following paragraphs describe the decision tables in greater detail. Anyone not familiar with the format and structure of diagnostic decision logic tables should read the following paragraphs and study the sample table in figure 6-1 carefully before attempting to use the decision tables later in this section. Also, anyone using decision tables for the first time should always start at the beginning of the tables and continue through to the end.

The diagnostic decision logic table is a specialized format for displaying logic in a way that is superior to the conventional logic flowchart because the logic is more visible. The DDLT analyzes a situation down to a set of specific conditions and then directs the customer engineer to those actions that will correct the situation. Basically, the table is arranged in four sections, or quadrants: the Conditions quadrant, the Situations quadrant, the Sequence quadrant, and the Actions quadrant. Figure 6-1 illustrates the layout of a diagnostic decision logic table; the sample table is for purposes of illustration only and is not a table from this terminal subsystem.

Starting from the top, each table has a title. The title for the DDLT in figure 6-1 for example would be, Table CR1. DDLT for Card Reader (Sheet 1 of 1). Next the table has an entry (Visual Checks in sample table) indicating the kind of test that the table covers. Next the table has an Assume block. This block contains setup information or information that is prerequisite to performing the rest of the test contained in the table. The remainder of the table consists of the quadrants noted previously; these quadrants are used in a clockwise direction, starting from the conditions quadrant.

Conditions Quadrant

The conditions quadrant of a DDLT contains test conditions and questions that can be answered with either a yes or a no. The CE should read and answer all of the questions in the conditions quadrant and write the answers to each question (Y or N) in a vertical column before proceeding to the situations column.

Situations Quadrant

The Situations quadrant of the example table contains 10 vertical columns of Ys and/or Ns, and one column with the word Other in it. Each of the first 10 columns

VISUAL CHECKS											
ASSUME Card-reader power cord is connected to ac outlet. Power is on. If power is not on, see procedure 1.											
CONDITIONS	SITUATIONS										
	1	2	3	4	5	6	7	8	9	10	11
Is POWER ON indicator illuminated?	Y	N	N	N	Y	Y	Y	Y	Y	Y	OTHER
Cycle rear-panel toggle switch S1. Press READ CHECK indicator/switch. Do all other indicators illuminate?	Y	N	N	Y	N	N	Y	Y	Y	Y	
Do any indicators illuminate?	-	N	N	-	N	Y	-	-	-	-	
Press and release RESET indicator/switch. Is RESET indicator illuminated?	Y	-	-	-	-	-	N	Y	Y	Y	
Do all three motors start when RESET indicator/switch is pressed (observe card-feed drum and coils of stacker motors)?	Y	-	-	-	-	-	-	N	N	Y	
Do any motors start?	-	N	Y	-	-	-	-	Y	N	-	
Did motor power drop within 10 to 30 seconds after releasing RESET indicator/switch?	Y	-	-	-	-	-	-	-	-	N	
ACTIONS	SEQUENCE										
Go to sheet 2, Electromechanical Checks.	X	-	-	-	-	-	-	-	-	-	-
Check that toggle switch S1 (rear panel) is up.	-	1	-	-	-	-	-	-	-	-	-
Check that removable power cord is connected securely to card reader.	-	2	-	-	-	-	-	-	-	-	-
Check fuses (rear panel).	-	3	-	-	-	-	-	-	-	-	-
Check switch board and associated cabling (procedure 40). Replace, if required (procedure 41).	-	4	-	2	2	2	3	-	-	-	-
Refer to CB10X manual.	-	5	4	4	3	4	5	3	3	3	-
Check +17-volt power supply (procedure 36).	-	-	1	-	-	-	-	-	-	-	-
Check for +17 V dc between ground and control-board connector P2, pins 2 and 3 and between ground and switch board connector, pins 2 and 3 (two pins joined by foil).	-	-	2	-	-	-	-	-	-	-	-
Check cable between control board and switch board.	-	-	3	-	-	-	-	-	-	-	-
Replace lamp in failing indicator (procedure 41).	-	-	-	1	-	1	-	-	-	-	-
Check failing indicator and/or switch (procedure 40) and replace, if required (procedure 41).	-	-	-	3	-	3	-	-	-	-	-
Check READ CHECK indicator/switch (procedure 40) and replace, if required (procedure 41).	-	-	-	-	1	-	-	-	-	-	-
Check +5-volt power supply (procedure 35).	-	-	-	-	-	-	1	-	-	-	-
Check RESET indicator/switch (procedure 40) and replace, if required (procedure 41).	-	-	-	-	-	-	2	-	-	-	-
Replace control board (procedure 44).	-	-	-	-	-	-	4	-	2	2	-
Check for ac power at motor connectors (procedure 37).	-	-	-	-	-	-	-	1	-	-	-
Check failing motor. Replace motor, if required (procedure 46 for card-feed motor, or procedure 47 for card-stacker motor).	-	-	-	-	-	-	-	2	-	-	-
Check common cable connections to motors.	-	-	-	-	-	-	-	-	1	-	-
Check that T0 switch (control board) has labeled side, T0, up.	-	-	-	-	-	-	-	-	-	1	-
Call Regional Tech Support.	-	-	-	-	-	-	-	-	-	-	X

Figure 6-2. Example of a Diagnostic Decision Logic Table

represents a unique set of answers to the questions asked in the conditions quadrant. A dash (-) in a column indicates that the answer to the associated condition is irrelevant; that is, the answer may be either a yes or a no without affecting the result. In using the tables, the CE should look for a match between the Y and N column written down while answering the questions posed in the conditions quadrant and the Y and N answers listed in a column of the situations quadrant.

As an example, refer to the shaded area of the sample figure and assume that each question in the conditions quadrant was answered no (N) as it was tested. The full column of N answers to the conditions questions would actually match situations column 2 even though situations column 2 contains three dashes. This is true because the dashes indicate that their respective conditions questions are irrelevant. As can be seen by examining the conditions questions, it is indeed irrelevant to ask which indicators light or which motors run if it is already known that no indicators light and no motors run.

When using the tables, look for a match between the conditions answers and the situations columns starting from the left situations column and moving toward the right one. Do this because overriding situations are normally listed first (on the left) within the situations quadrant. Overriding situations are those that move you out of the table and on the next test, table, or action.

Sequence Quadrant

The sequence quadrant contains numbers that indicate the sequence in which corrective actions are to be taken. The sequence of actions for a particular set of conditions appears in the same vertical column as the situations column that matches the conditions. For example, the sample figure shows the sequence 1, 2, 3, 4, and 5 directly under the situations 2 column. These sequence numbers indicate that the first action to be taken is to, Check that toggle switch S1 (rear panel) is up; the next action to be taken is to, Check that removable power cord is connected securely to card reader; and the last action to be taken (5) is to, Refer to CB10X manual. The sequence of actions normally selects either the easiest procedure or most likely cause first and progresses to the most difficult procedure or least likely cause.

In the sample figure, also notice that some of the sequence columns contain only an X. The X indicates that there is only one possible action to take. As an example, the X in the situation 11, or Other column of the sample table, indicates that the

only action available is to call for assistance. The Other term in the situation 11 column indicates that none of the previous situations match the answer written down for the conditions questions.

Actions Quadrant

The actions quadrant lists specific actions that the CE is to take in the process of troubleshooting an equipment. The actions listed are taken in the order listed in the sequence quadrant.

Notice that either the conditions or the actions quadrants can direct the CE to perform specific procedures. A condition, for example, could direct the CE to run a particular checkout procedure before asking a question about the results (yes or no answer) of the checkout procedure. An action, on the other hand, could direct a CE to perform a checkout procedure, perform an adjustment or remove-and-replace procedure, exit this table and go to another table, or to call for assistance in troubleshooting the malfunction.

To facilitate locating the corrective action procedures that are part of this section, an index at the end of this section lists all of the corrective action procedures and their respective page numbers.

GENERAL INSTRUCTIONS

If you are unfamiliar with this terminal or with the use of the DDLT as a trouble-shooting tool, go back and read the material under the preceding Diagnostic and Corrective Maintenance heading carefully. Then, start at the beginning of the tables and work through to the end of the section, ensuring that all malfunctions detected are corrected. If a table pertains to equipments or functions not present in a particular terminal configuration, skip to the following table or tables and continue in this manner until all applicable tables are completed.

DDLTs AND PROCEDURES

To further facilitate use of the decision tables and their associated procedures, the arrangement of the diagnostic and corrective maintenance information for the remainder of this section is shown in figure 6-2.

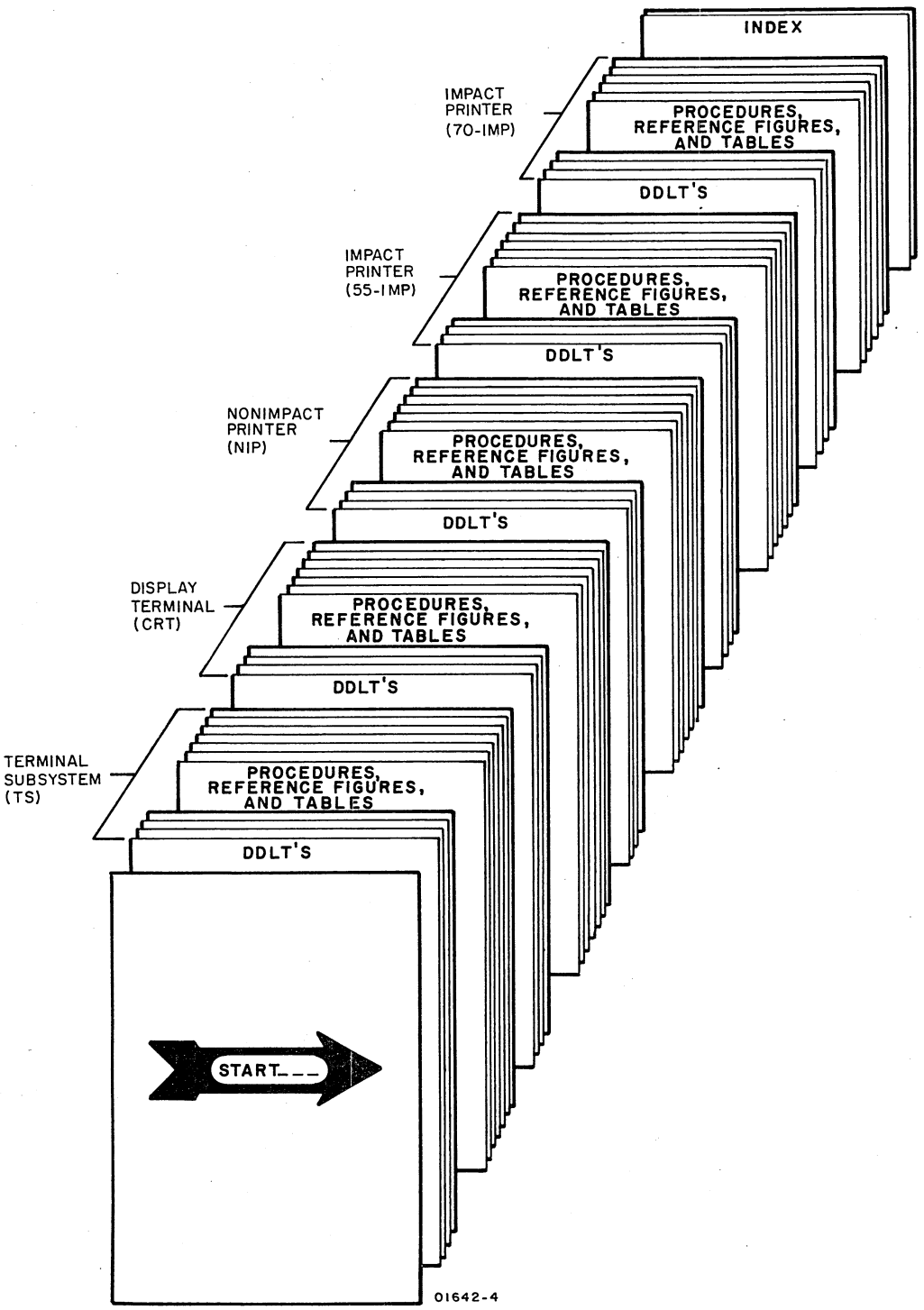

Figure 6-3. Arrangement of Diagnostic and Corrective Maintenance Information

NOTE

If you are unfamiliar with diagnostic decision logic tables, read the explanation of their use described earlier in this section. Then, start at the beginning of the next page and work your way through to the end of this section until you correct any fault.

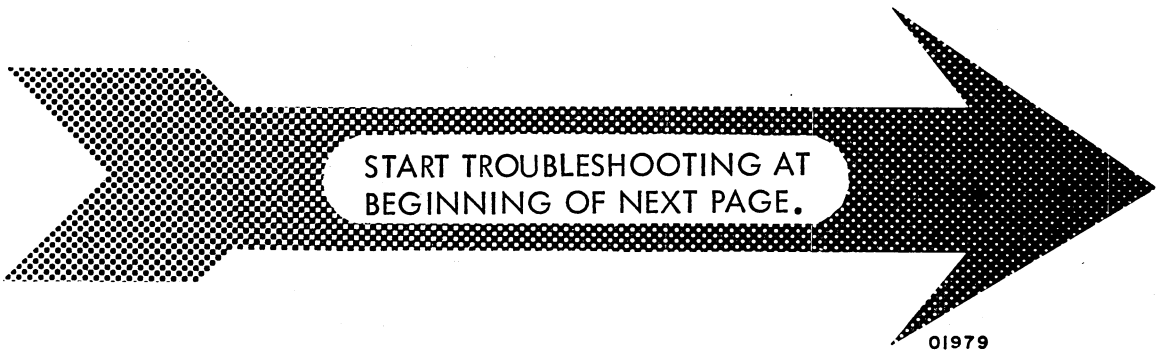

NOTE

Because the diagnostic decision logic tables (DDLTs) require much time, money, and effort — you, the user, determine whether they will continue in future manuals as a diagnostic aid.

Please use the comment sheet at the back of this manual to let us know the following: 1) Did you actually use these tables? 2) Do you think they are valuable and why or why not? 3) Do you feel this is the best approach to a "cookbook" troubleshooting manual that you have seen, considering that the DDLTs tie everything together; that is, diagnostics, procedures, figures, and tables? 4) To you, what is their most serious shortcoming? 5) How would you improve the DDLTs? Remember, the comment sheet is your direct link with the writer.

INDEX

POWER SEQUENCE

Turning On Subsystem Power 6A-2
Turning Off Subsystem Power 6A-3

TERMINAL SUBSYSTEM

Procedure	Page	Procedure	Page	Procedure	Page
TS1	6A-2	TS3	6A-3	TS5	6A-4
TS2	6A-3	TS4	6A-4	TS6	6A-5

Figure	Page	Figure	Page	Figure	Page
TS1	6A-14	TS3	6A-15	TS5	6A-17
TS2	6A-15	TS4	6A-16		

Table	Page	Table	Page	Table	Page
TS1	6A-1	TS3	6A-18	TS4	6A-19
TS2	6A-18				

KEYBOARD DISPLAY

Procedure	Page	Procedure	Page	Procedure	Page
CRT1	6B-5	CRT8	6B-17	CRT15	6B-29
CRT2	6B-5	CRT9	6B-20	CRT16	6B-30
CRT3	6B-5	CRT10	6B-21	CRT17	6B-32
CRT4	6B-7	CRT11	6B-25	CRT18	6B-34
CRT5	6B-8	CRT12	6B-26	CRT19	6B-35
CRT6	6B-9	CRT13	6B-27	CRT20	6B-36
CRT7	6B-13	CRT14	6B-28		

Figure	Page	Figure	Page	Figure	Page
CRT1	6B-38	CRT11	6B-47	CRT21	6B-56
CRT2	6B-39	CRT12	6B-47	CRT22	6B-56
CRT3	6B-40	CRT13	6B-48	CRT23	6B-57
CRT4	6B-40	CRT14	6B-48	CRT24	6B-58
CRT5	6B-41	CRT15	6B-49	CRT25	6B-58
CRT6	6B-42	CRT16	6B-53	CRT26	6B-59
CRT7	6B-43	CRT17	6B-53	CRT27	6B-59
CRT8	6B-44	CRT18	6B-53	CRT28	6B-60
CRT9	6B-45	CRT19	6B-54	CRT29	6B-61
CRT10	6B-46	CRT20	6B-55		

KEYBOARD DISPLAY (CONTD)

Table	Page	Table	Page	Table	Page
CRT1	6B-1	CRT2	6B-2	CRT3	6B-3

NONIMPACT PRINTER

Procedure	Page	Procedure	Page	Procedure	Page
NIP1	6C-3	NIP6	6C-7	NIP11	6C-14
NIP2	6C-4	NIP7	6C-10	NIP12	6C-15
NIP3	6C-4	NIP8	6C-12	NIP13	6C-15
NIP4	6C-5	NIP9	6C-12		
NIP5	6C-6	NIP10	6C-13		

Figure	Page	Figure	Page	Figure	Page
NIP1	6C-16	NIP5	6C-19	NIP9	6C-21
NIP2	6C-17	NIP6	6C-20	NIP10	6C-22
NIP3	6C-18	NIP7	6C-20		
NIP4	6C-19	NIP8	6C-21		

Table	Page	Table	Page
NIP1	6C-1	NIP2	6C-22

55-LPM IMPACT PRINTER

Procedure	Page	Procedure	Page	Procedure	Page
551MP1	6D-6	551MP7	6D-14	551MP13 ...	6D-18
551MP2	6D-8	551MP8	6D-15	551MP14 ...	6D-19
551MP3	6D-8	551MP9	6D-15	551MP15 ...	6D-20
551MP4	6D-10	551MP10	6D-16	551MP16 ...	6D-20
551MP5	6D-12	551MP11	6D-16	551MP17 ...	6D-21
551MP6	6D-13	551MP12	6D-17		

Figure	Page	Figure	Page	Figure	Page
551MP1	6D-23	551MP7	6D-27	551MP13 ...	6D-33
551MP2	6D-24	551MP8	6D-28	551MP14 ...	6D-34
551MP3	6D-24	551MP9	6D-29	551MP15 ...	6D-35
551MP4	6D-25	551MP10	6D-30	551MP16 ...	6D-36
551MP5	6D-25	551MP11	6D-31		
551MP6	6D-26	551MP12	6D-32		

Table	Page
551MP1	6D-1

70-LPM IMPACT PRINTER

Procedure	Page	Procedure	Page	Procedure	Page
701MP1	6E-7	701MP6	6E-15	701MP10 ...	6E-18
701MP2	6E-8	701MP7	6E-16	701MP11 ...	6E-18
701MP3	6E-10	701MP8	6E-17	701MP12	6E-19
701MP4	6E-10	701MP9	6E-18	701MP13 ...	6E-19
701MP5	6E-14				

Figure	Page	Figure	Page	Figure	Page
701MP1	6E-21	701MP7	6E-25	701MP13 ...	6E-29
701MP2	6E-22	701MP8	6E-26	701MP14 ...	6E-30
701MP3	6E-22	701MP9	6E-26	701MP15	6E-31
701MP4	6E-23	701MP10	6E-27	701MP16 ...	6E-32
701MP5	6E-23	701MP11	6E-27	701MP17 ...	6E-32
701MP6	6E-24	701MP12	6E-28	701MP18 ...	6E-33

Table	Page	Table	Page
701MP1	6E-1	701MP3	6E-3
701MP2	6E-2	701MP4	6E-4

TABLE TS1. DDLT FOR TERMINAL SUBSYSTEM

OPERATIONAL CHECKS FOR TERMINAL SUBSYSTEM

ASSUME

Subsystem equipments installed per instructions in appendix of associated Operators Guide/Reference Manual (see preface). Proper subsystem cabling verified per figure TS1. If printer is part of subsystem, it has paper loaded properly (procedure NIP1 or 551MP3 or 701MP3), and if an impact printer, it has ribbon and format tape installed properly (procedures 551MP4, 551MP5, 701MP4, and 701MP5).

CONDITIONS	SITUATIONS									
	1	2	3	4	5	6	7	8	9	10
Apply subsystem power per procedure TS1. Do all equipments appear to have power?	Y	Y	Y	Y	Y	Y	Y	N	N	OTHER
Does any equipment have power?	-	-	-	-	-	-	-	Y	N	
Run through offline portion of subsystem checkout procedure (procedure TS6). Does procedure complete without errors?	Y	Y	Y	Y	Y	N	N	-	-	
Run through online portion of subsystem checkout procedure (procedure TS6). Does procedure complete without errors?	Y	N	N	N	N	-	-	-	-	
If errors are occurring, are they restricted to one equipment?	-	-	-	N	Y	Y	N	-	-	
Original problem does not recur. Could error have been random error external to terminal subsystem?	Y	-	-	-	-	-	-	-	-	
Contact communication facility customer service personnel. Do they acknowledge communication line problems?	N	Y	-	N	N	-	-	-	-	
Contact system CPU operating and/or technical support personnel. Do they acknowledge system problems?	N	-	Y	N	N	-	-	-	-	

ACTIONS	SEQUENCE									
Check PMT tables and do any required PMPTs. Have terminal operator operate terminal and observe to ensure no further errors occur.	X	-	-	-	-	-	-	-	-	-
Inform terminal operator and site supervisor of communication line problems and of approximate time until problems are cleared.	-	X	-	-	-	-	-	-	-	-
Inform terminal operator and site supervisor of system problems and of approximate time until problems are cleared.	-	-	X	-	-	-	-	-	-	-
Turn off subsystem power per procedure TS2 and remove ac line cords for equipments from outlets. Check subsystem cabling per procedure TS4.	-	-	-	1	3	3	1	-	-	-
Go to DDLTs for CRT and begin troubleshooting.	-	-	-	2	2	2	2	-	2	-
Repeat procedure TS6. If offline still OK and online fails, notify communication line supplier and/or CPU system personnel of suspected communication line or system fault. Try to get verification before leaving site; if unable to verify, call for assistance.	-	-	-	3	-	-	-	-	-	-
Go to DDLTs for equipment indicating fault and begin troubleshooting.	-	-	-	-	1	1	-	X	-	-
Check site power. If not OK, notify site electrician or power company personnel as appropriate.	-	-	-	-	-	-	-	-	1	-
Problem not covered in manual. Call for assistance.	-	-	-	4	4	4	3	-	-	X
Note: After completing any repairs, verify that subsystem is operational by rerunning procedure TS6, and check PMT tables, found earlier in this section, for any required preventive maintenance and do PMTPs as required.										

Procedure TS1 – Turning On Subsystem Power

Before turning on subsystem power, verify that required subsystem cables are connected. These include the following:

- Keyboard-to-display module cable
- Keyboard display-to-communication system cable (data set or current loop)
- Keyboard display-to-peripheral printer cable (if printer is included)

Also ensure that all of the units have input power cables plugged into an appropriate site outlet; this includes modem if data set communication system is used.

Turn on subsystem power as follows:

At the site modem cabinet:

1) If modem is used and has a power on/off switch, turn modem power on. Modems without power switches go on when plugged in.

At the printer (as per procedure NIP1 or IMP1):

2) If printer is present, check that ac power cord is connected to site power outlet.
3) Press power-on switch to turn printer power on.
4) If impact printer, wait 5 seconds after turning power on and then press START/STOP switch/indicator to light indicator.

At the keyboard display (as per procedure CRT1):

5) Check that keyboard display ac power cord is connected to site power outlet.
6) Move CB1 on rear panel of terminal to on position (up). Within about 30 seconds a blinking cursor should appear on the display screen in upper left or lower left corner; if not, turn up INTENSITY control on display front panel until cursor appears.

The preceding steps should turn power on at a properly operating subsystem. If trouble occurs in applying power to a terminal equipment, refer to the DDLT for that equipment and begin troubleshooting.

Procedure TS2 – Turning Off Subsystem Power

To turn off subsystem power, do the following:

At the printer (as per procedure NIP2 or IMP2):

1) If impact type printer, bring printer offline by pressing START/STOP switch/indicator to extinguish indicator.
2) Move printer on/off switch to off position.

At the keyboard display (as per procedure CRT2):

3) Move CB1 on terminal rear panel to off position (down).

The preceding steps turn power off for each equipment that may be present in a terminal installation. If a modem is used for the communication line interface, it also must be switched off or its power cord removed from the ac outlet. As noted in the preceding steps, the individual equipment procedures also give a power-on and a power-off procedure.

Procedure TS3 – Removing/Replacing Subsystem Cables

NOTE

If keyboard cable is to be removed and checked, reference procedure CRT4 in next subsection for keyboard cable removal.

To remove any other interconnecting cable within the subsystem at either or both ends, proceed as follows:

1) Turn power off to subsystem cabinets interconnected by cable to be removed (refer to appropriate power-off procedure).
2) Loosen both retaining screws on each connector to be removed.
3) Pull cable connector straight back and off of its mating connector on equipment.

Replace any interconnecting cable within the subsystem at either or both ends as follows:

4) Verify cable/connector is correct (refer to figure TS1).
5) Slide cable connector straight onto its mating connector on equipment.
6) Tighten both retaining screws on each connector replaced.
7) Reapply power to appropriate equipments if required at this time (see appropriate power-on procedures).

Procedure TS4 – Checking Subsystem Cables

To check any interconnecting cables within the subsystem proceed as follows:

1) Refer to procedure TS3 and do steps 1 through 3 to remove cables to be inspected.
2) Carefully inspect connector pins on both ends for possible damage. If damage is found on connector attached to cable, discard cable and replace with a new one. If damage is found on equipment connector, remove and replace either connector or panel mounting connector (depends on parts spared for field replacement) per appropriate equipment procedure. In either case, after correcting problem, replace cable per procedure TS3.
3) Use information from appropriate Keyboard Interface or Interface Connector Pin Assignments tables (tables TS2, TS3, and TS4), or from current-loop interface figures (figures TS2 and TS3) to do a pin-to-pin continuity check using an ohmmeter or continuity-check test light.
4) If fault (short or open circuit) is found, repair if possible and replace cable per procedure TS3. If fault is not repairable, replace cable per procedure TS3.

Procedure TS5 – Removing/Replacing Subsystem Equipments

To remove any equipment within the subsystem, proceed as follows:

1) Turn off subsystem power per procedure TS2.
2) Remove ac power cord from site outlet for equipment to be removed.
3) Remove input/output cables from equipment to be removed (procedure TS3).
4) Remove equipment from subsystem.

To reinstall any equipment in the subsystem, do the following:

5) Refer to installation procedures in appendix of associated Operators Guide/Reference Manual (see preface): uncrate and install equipment per instructions.
6) After replacing any equipment, verify equipment and subsystem operation by performing procedure TS6.

Procedure TS6 – Terminal Subsystem Checkout

The following procedure provides both offline and online checks for the terminal subsystem.

NOTE

If, in doing any of the following checkout steps, an error is found, use pencil and paper to note the error condition and the conditions under which it occurred (keyboard control or rear panel switch settings, etc.). Then try to complete the entire checkout procedure if possible. This will facilitate using the equipment DDLTs to trouble-shoot errors, and will permit you to describe the error and test conditions accurately if the error cannot be rectified via the DDLTs and it becomes necessary to call for assistance.

To check offline operation of the display terminal, proceed as follows:

1) Make a quick visual inspection of the input/output cable connections between the terminal equipments, and check to ensure that the ac power cords for each terminal equipment is plugged into an appropriate outlet.
2) Move TEST/NORMAL switch on rear panel of display terminal to TEST position.
3) Move keyboard display ON LINE/LOCAL and FULL DUP/HALF DUP switches to LOCAL and HALF DUP positions.
4) Press PAGE key on the keyboard down to select page mode operation.
5) Ensure that 96/64 key on keyboard is up to select 96-character code set.

The on condition of a voltage level terminal can easily be noted in the following step if the CO indicator lights as CB1 is turned on. If the indicator fails to come on, however, it does not necessarily indicate that the terminal does not have power because either the indicator light may be burned out or the particular modem used on the terminal may require an internal switch setting (CURRENT LOOP switch is enabled) that blocks the action of the CO indicator (holds it off).

6) Move circuit breaker CB1 on display terminal rear panel to up position (on).
7) Wait about 30 seconds after performing preceding step and then adjust INTENSITY control on display front panel until a raster appears on the display screen (see figure TS4). Then turn INTENSITY control counter-clockwise until only the cursor (blinking dash) is clearly visible in upper left corner of screen.

The following two steps are video quality checks.

8) Fill display screen with uppercase H pattern in the following manner:

   a) Press SHIFT LOCK key on keyboard.

   b) Press and hold REPEAT and H keys. Display begins automatically filling with H characters. Near the end of each display line (73rd character position), a beeper signal sounds to indicate the end of a line is approaching. Display screen continues to fill with Hs until REPEAT key is released. A full screen (24 display lines) is indicated as the cursor moves from the lower right corner of the screen back to the upper left corner; Hs will continue to be written over the previous Hs. When this occurs, release the REPEAT key and then the H character key.

   c) Press SHIFT LOCK key on keyboard to release shift lock action.

9) Check the H display pattern entered in the preceding step to ensure that:

   a) Nominal size is about 7.8 inches (198 mm) wide by 5 inches (127 mm) high.

   b) Characters are of about uniform height and width throughout the pattern.

   c) Characters display clearly and crisply throughout the pattern.

   d) Side, top, and bottom edges are neither bowed out (barreled) nor curved inward (pincushioned).

10) Clear display screen by pressing CLEAR key on keyboard.

11) Move FULL DUP/HALF DUP switch on keyboard to FULL DUP position and then key in a few characters on the keyboard. Each character appears on the screen as it is keyed in.

12) Move ON LINE/LOCAL switch on keyboard to ON LINE position and then key in a few characters on the keyboard. Each character appears on the screen as it is keyed in.

13) Move FULL DUP/HALF DUP switch on keyboard to HALF DUP position and then key in a few characters on the keyboard. Two characters will display as each key is pressed.

14) Return FULL DUP/HALF DUP switch on keyboard to FULL DUP position.

15) Press CONTROL and then G key; audible alarm will sound for about 200 ms.

16) Manually check X/Y positioning function of the keyboard display in the following manner:

   a) Remove display cabinet hood (refer to procedure CRT5 later in this section if necessary).

   b) Ensure that internal X/Y POSITION switch is in enable position (refer to figure CRT1).

   c) Press the following keys one at a time in sequence: ESC, 1, space bar, and 7. Cursor moves to lower left corner of screen.

   d) Press the following keys one at a time in sequence: ESC, 1, o, and 7. Cursor moves to lower right corner of screen.

   e) Press the following keys one at a time in sequence: ESC, 1, space bar, and space bar. Cursor moves to upper left corner of screen.

   f) Ensure X/Y POSITION switch is in normal operating position (enabled or disabled) for this terminal installation, but do not replace cabinet hood until checkout procedures are complete.

17) Press skip key (→) a few times; each time key is pressed, cursor moves ahead a character position without affecting displayed data.

18) Press backspace key (←) a few times; each time key is pressed, cursor moves back a character position without affecting displayed data.

19) Press CONTROL key and then U key on keyboard; cursor will move ahead a character position without affecting displayed data.

20) Press LINE FEED key on keyboard; cursor will move down a line from present position without affecting displayed data.

21) Press CARRIAGE RETURN key on keyboard; cursor will move to left margin of display screen and may or may not line feed, depending on setting of internal AUTO LINE FEED switch.

22) Press cursor-up key (↑) on keyboard; cursor will move up a line from present position without affecting displayed data.

23) Press CONTROL and Z keys on keyboard; cursor will move up a line from present position without affecting displayed data.

24) Press RESET key on keyboard; cursor will reset to upper left corner of display screen without affecting displayed data.

25) Press skip key (→) a few times to move cursor off of left margin and into a field of displayed characters, and then press the CONTROL and V keys. The display line containing the cursor will clear from the character position immediately above the cursor to the end of the line; the cursor does not move.

26) Press the CONTROL and W keys and then key in a few characters on the keyboard; characters keyed in will blink on and off approximately twice a second.

27) Press the CONTROL and N keys and then key in a few characters on the keyboard; characters keyed in following the blink field of the preceding step will display at reduced intensity.

28) Press the CONTROL and O keys and then key in a few characters on the keyboard; characters keyed in following this entry will display at normal character intensity and will not blink. Display line should now consist of: 1) normal brightness characters, 2) a field of blinking characters, 3) a field of reduced intensity characters, and 4) a field of normal brightness characters.

29) Press CONTROL and X keys; this key combination is the same as pressing the CLEAR key. Display screen will clear of all displayed data and cursor will reset to upper left corner of display screen.

30) Go to procedure CRT3, Checking the Keyboard, and perform the checks listed there.

31) By using appropriate numeric keys and CARRIAGE RETURN key (also LINE FEED if display does not auto line feed on carriage return), enter numbers 01 in first two character positions of first display line, numbers 02 in first two character positions of second display line, and so on until numbers 24 are entered in first two character positions of 24th display line.

32) Press PAGE key on keyboard and release it to up position so that scroll mode operation of display is now selected.

33) Press 96/64 key on keyboard to select 64-character ASCII subset.

34) Press and hold REPEAT key and any alpha character key on the keyboard without actuating either SHIFT or SHIFT LOCK keys. Twenty-fourth display line will fill with uppercase version of character key pressed. As 24th line fills, it and each line above it scrolls up one line position (line 01 scrolls off screen at top), cursor resets to left margin of the now clear 24th line, and character being entered begins filling 24th line again. This manner of scrolling continues as long as REPEAT and character keys are held down. To stop process, release REPEAT key and then character key.

This completes the offline checks for the display terminal. The following are offline checks for the peripheral printers that may be part of the terminal subsystem. If these checks are to be run now, continue; if not, return keyboard display control switches (on keyboard) and the rear panel TEST/NORMAL switch to their normal operating positions.

35) Press PAGE key on keyboard down to reselect page mode operation of display.

36) Press 96/64 key on keyboard to release it (up) and select 96-character code set.

NOTE

The CLEAR key on the display keyboard should be used to clear the display logic whenever the PAGE switch is moved from its up (scroll mode) to its down (page mode) position. Failure to do so may result in page mode operation with a random home position for the cursor (position other than upper left corner of screen).

37) Press CLEAR key on keyboard to clear display and reset cursor to upper left corner of screen.

38) Move ON LINE/LOCAL switch on keyboard display to LOCAL position.

The following steps (39 through 44) relate to terminals configured with nonimpact printer peripherals, while steps 45 through the end of the offline checks are for terminals with impact printer peripherals. The nonimpact printer formats full print lines in 80-character lines and then performs an automatic line feed and carriage return. To feed a line and return the carriage before the end of a full display/print line, press the LINE FEED key and then the CARRIAGE RETURN key on the keyboard display.

39) Push ON switch on control panel of nonimpact printer down to turn on printer power.

During the following checks and during normal operation of the terminal, it is essential that the keyboard display and printer baud rates match one another to transfer data properly. The nonimpact printer has a maximum baud rate of 300. Verify keyboard display baud rate settings by referring to figure CRT1. The middle position of the HIGH RATE/300/LOW RATE switch on the keyboard display is factory preset to a data transfer rate of 300 baud.

40) Key to a few uppercase characters using SHIFT or SHIFT LOCK key, and then release SHIFT or SHIFT LOCK key and key in a few lowercase characters. As each character is keyed, the character keyed displays on the CRT screen and prints on the printer.

41) Press LINE FEED key and the CARRIAGE RETURN key. Both display and printer perform a line feed and then a carriage return operation.

42) Repeat steps 40 and 41 a few times to ensure printer prints, spaces, line feeds and carriage returns properly.

43) Press the backspace key (←) on the keyboard display to ensure printer backspaces properly.

44) Key in a few characters on the keyboard display, and then press printer LF (line feed) and CR (carriage return) keys to ensure they operate properly. If printer fails to perform correctly in any of the preceding steps or if it does not print properly, turn to the Nonimpact Printer portion (NIP) of this section and troubleshoot the printer. This completes offline testing of a terminal using a nonimpact printer peripheral; go to the online checkout procedures to complete checkout of the terminal subsystem.

Steps 45 through 57 following are only for terminals configured with an impact printer peripheral. The impact printer normally formats print lines to correspond with its 132-character print buffer. That is, it prints a line only after its 132-character buffer is filled or after it receives an acceptable printer control code (carriage return, line feed, form feed, or vertical tabulation). In the case of either a full print buffer or a carriage return control code, the printer prints out the contents of the print buffer and does a carriage return. In the case of the other control codes, the printer prints out the contents of the print buffer, does a carriage return, and then does the action indicated by the particular control code used (line feed, vertical tabulation, or form feed). The best way to match the printer format to the display format therefore is to terminate a display line with two control key inputs on the keyboard — LINE FEED and CARRIAGE RETURN, form feed and CARRIAGE RETURN, or vertical tabulation and CARRIAGE RETURN for example.

To check operation of the impact printer, perform the following:

45) Verify that ac power cord is plugged into appropriate power outlet, and that input/output cable between printer and display terminal is securely connected.

During the following checks and during normal operation of the terminal, it is essential that the keyboard display and printer baud rates match one another to transfer data properly. Refer to figures CRT1 and IMP7 and procedure IMP8 later in this section to ensure proper settings of baud rate switches in both display and printer. While checking baud rate switch settings, also ensure that settings of printer and display parity bit selection match.

46) Verify that paper, ribbon and format tape are all properly installed in printer (procedures IMP3, IMP4 and IMP5, respectively).

47) Move power ON/OFF rocker switch on front panel to ON position.

NOTE

If cabinet or front access panel is removed, printer will only operate with the interlock switch pulled up (interlock switch is white button just behind control panel). Also note that FORM FEED and Test Print switches only function when printer is offline, that is when START/STOP indicator on control panel is extinguished.

48) Activate Test Print switch, which may be located either on control panel or on circuit card 1A02 inside printer cabinet. If switch is not on control panel, identify its location via figure IMP6 later in this section. When switch is activated, printer will print alternating Bs and blanks across a full horizontal print line of 132 characters, do a line feed, and print another line of Bs and blanks. This process continues until the Test Print switch is pressed again. Allow several lines to print and then stop test print process (see figure TS5).

CAUTION

Do not permit the printer to print in the preceding manner for more than a few minutes because excessive printing of this type may overheat and damage the print solenoids.

49) Use the printed pattern from the preceding step to check the vertical and horizontal alignment of the characters and print lines and columns. If any alignment problems are encountered, go to sheet 3 of table IMP1, the Diagnostic Decision Logic Table (DDLT) for the Impact Printer and begin troubleshooting the printer.

CAUTION

If forms runaway occurs when FORM FEED switch is tested, stop runaway by moving ON/OFF power switch to OFF position; go to impact printer troubleshooting procedures (IMP1, sheet 1) to diagnose cause of runaway.

50) Press FORM FEED switch. Forms should advance to top-of-forms position; if not, see procedure IMP3.

51) Press START/STOP switch on printer control panel; indicator in switch lights to indicate printer is ready to print.

52) Key in a few uppercase characters on the keyboard display, and then key in a few lowercase characters.

53) Press LINE FEED and then CARRIAGE RETURN keys on keyboard display. As keys are pressed, printer will print out characters entered on keyboard in preceding step, and when printing is complete, the printer will perform the line feed and carriage return operations.

54) Repeat steps 52 and 53 a few times to ensure printer prints, spaces, line feeds, and carriage returns properly.

55) Press CONTROL and K keys on the keyboard display; printer will vertical tab if format tape in printer has tab stops or will do a form feed.

56) Press CONTROL and L keys on the keyboard display; printer will do a form feed operation and stop at top of next form. If printer fails to perform correctly in any of the preceding steps or if it does not print properly, turn to the impact printer portion (IMP) of this section and troubleshoot the printer. This completes offline testing of a terminal using an impact printer peripheral; go to Online Checkout procedures, following, to complete checkout of the terminal subsystem.

57) If troubleshooting of the impact printer is not required, close rear access panel and front access panels, if removed or opened during checkout precedures; ensure that interlock switch is down before replacing front access panel.

This completes offline checkout procedures for the impact printer and for the terminal subsystem. If terminal is being returned to operation or if online checks are to be performed at this time, leave printer controls as they are. If terminal is being shut down or impact printer will not be used for a time, press the START/STOP switch on the printer control panel to extinguish the indicator in the switch. If returning to online operation at this time, be sure to return all of the keyboard display controls, including rear panel TEST/NORMAL switch, to the normal operating positions.

To check out the online operation of the terminal subsystem, perform the following steps.

58) Ensure power to all terminal equipments is off: circuit breaker CB1 at rear of display terminal is down and printer power switch is off.

59) Make a quick visual inspection of the input/output cable connections between the terminal equipments, and check to ensure that the ac power cords for each terminal equipment is plugged into an appropriate outlet.

Prior to doing step 60, remove modem power.

60) Connect display terminal to the communication facility (modem or current loop). Turn on power for the communication facility (switch on loop battery for current loop terminals or switch or plug into ac outlet on modem).

61) Move FULL DUP/HALF DUP switch on keyboard display to normal operating position for this terminal installation.

62) Move TEST/NORMAL switch on keyboard display to NORMAL.

63) Ensure ON LINE/LOCAL switch on keyboard display is in ON LINE, and baud rate and parity select switches on keyboard are set to positions appropriate for this system installation.

64) Ensure PAGE switch on keyboard display is in desired operating position: switch down selects page mode and switch up selects scroll mode.

65) Ensure 96/64 switch on keyboard display is in desired position. Down selects 64-character code set; up selects 96-character code set.

66) Move circuit breaker CB1 on rear panel of keyboard display up to turn on terminal power.

67) Turn on printer power: press nonimpact printer ON switch down, or move impact printer ON/OFF rocker switch to ON position and press START/STOP switch to light indicator in switch.

68) Wait 30 seconds after performing two preceding steps, adjust INTENSITY knob for proper cursor brightness, and press CLEAR key. If operating in scroll mode, cursor is located at left margin of line 24; if page mode, cursor is located in upper left corner of display screen.

69) On the keyboard of the display terminal, key in a system log-in or sign-in message and verify that system responds correctly. This completes online checkout of the terminal subsystem.

70) Key in the system log-out message on the keyboard, and turn terminal equipment off if they are not to be used shortly. If terminal fails to perform any of the preceding steps correctly, return to the beginning of the DDLTs (table TS1) and begin troubleshooting procedures, using the notes taken during this procedure as a guide.

71) Replace display cabinet hood and any printer panels that may have been removed during checkout procedures.

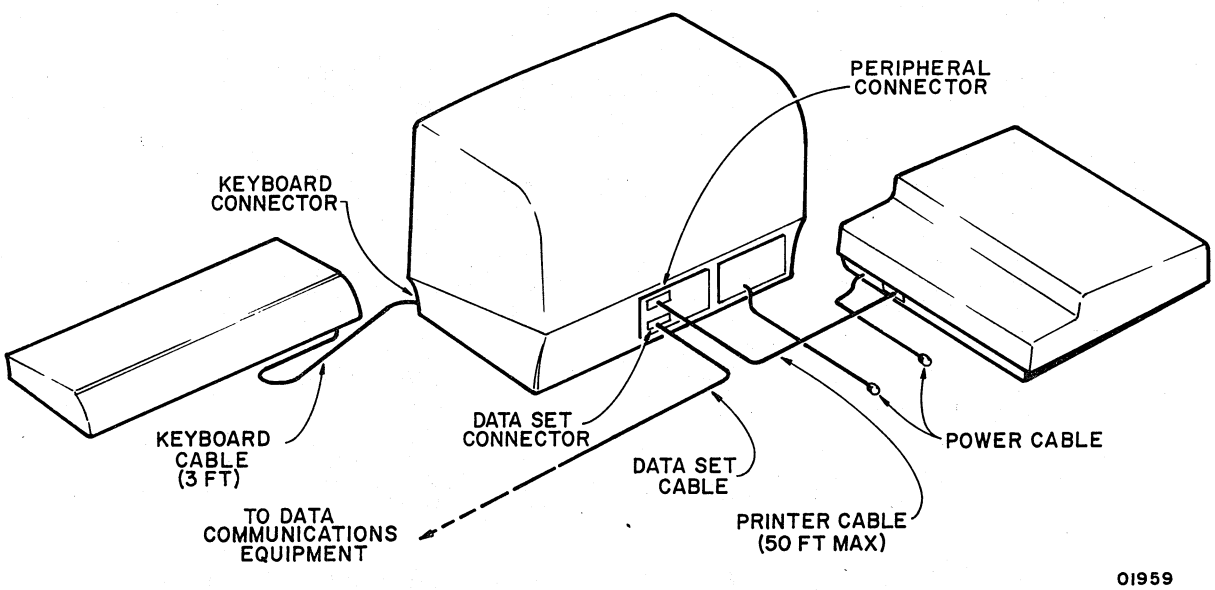

NOTE: DATA SET AND PERIPHERAL CABLES USE ITT CANNON DBC-25P CONNECTORS ON EACH END. STANDARD TERMINAL CABLE PART NUMBERS (CDC) ARE: 61406100 (10.5 FT), 61406101 (20.5 FT), 61406102 (30 FT), 61406103 (40 FT), AND 61406104 (50 FT). FTZ-SHIELDED TERMINAL CABLE PART NUMBERS (CDC) ARE: 61406110 (10.5 FT), 61406111 (20.5 FT), 61406112 (30 FT), 61406113 (40 FT), AND 61406114 (50 FT).

Figure TS1. Terminal Cabling

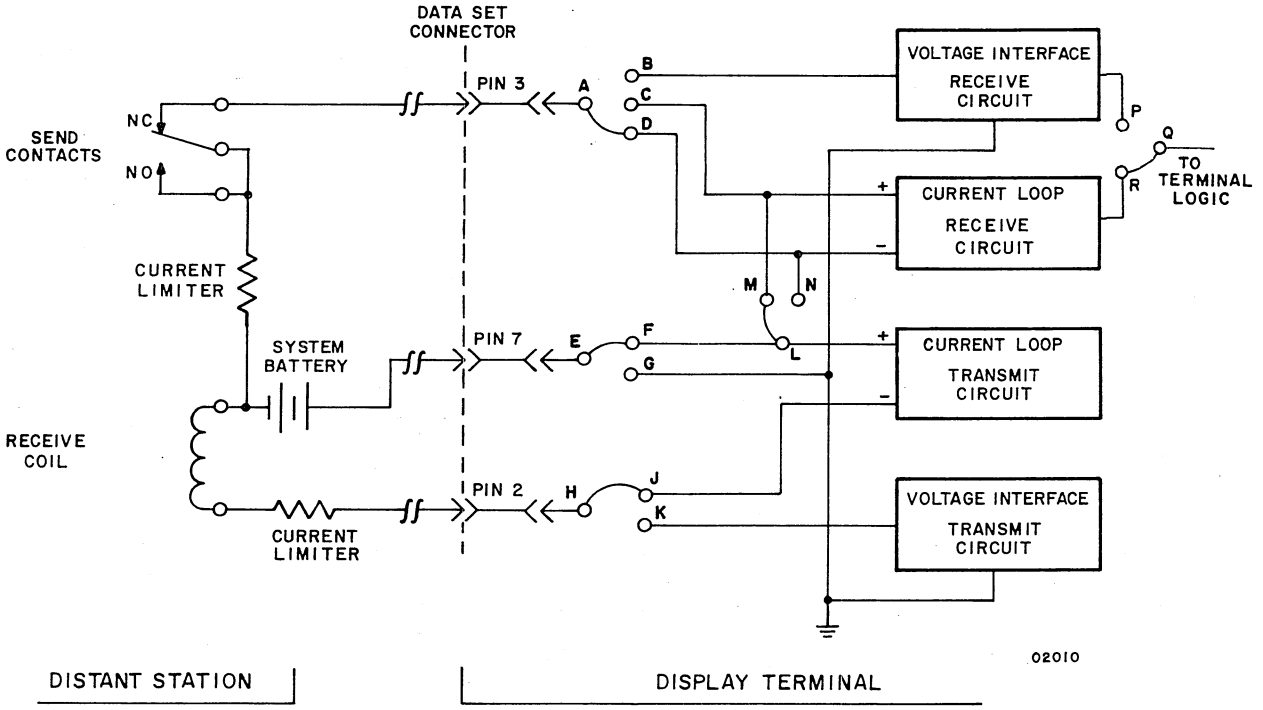

Figure TS2. Data Set Connector Pin Assignments for Unipolar, Full-Duplex, Current Loop Communication Channel*

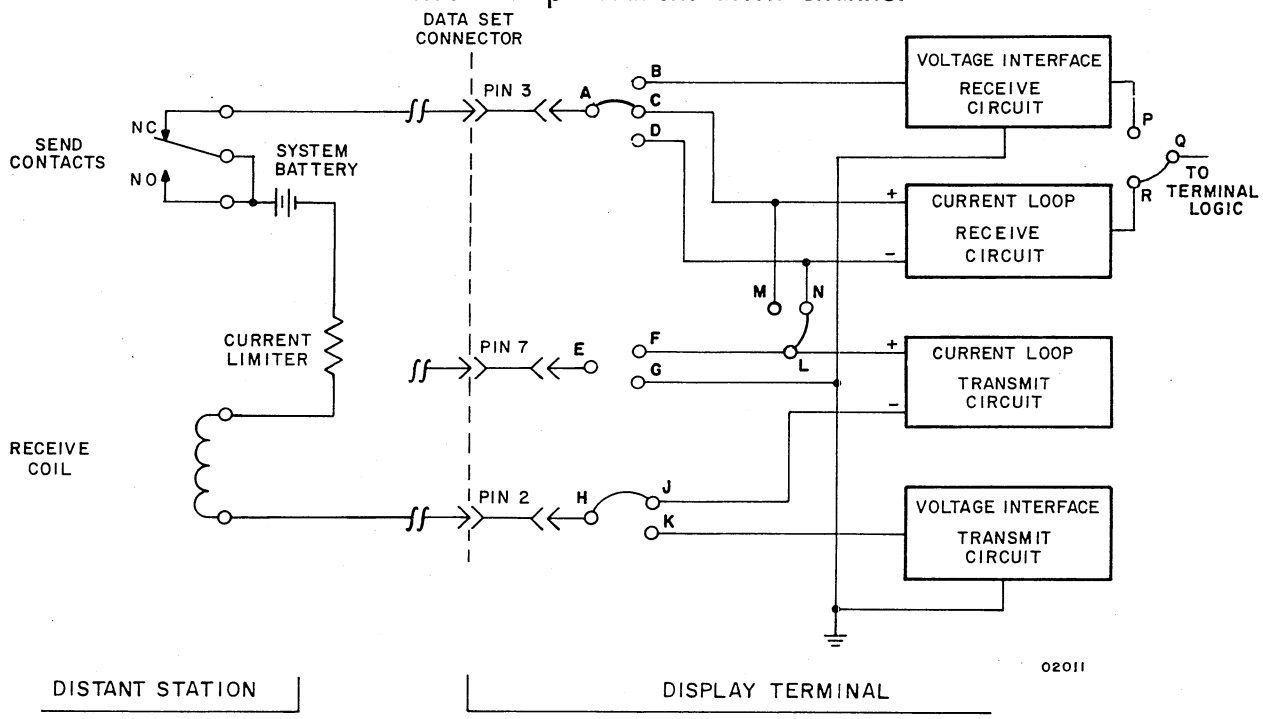

Figure TS3. Data Set Connector Pin Assignments for Unipolar, Half-Duplex, Current Loop Communication Channel*

* Current loop circuits are only available in terminals with that feature installed. System battery is 24 V dc and current limiters are selected for 20-mA flow.

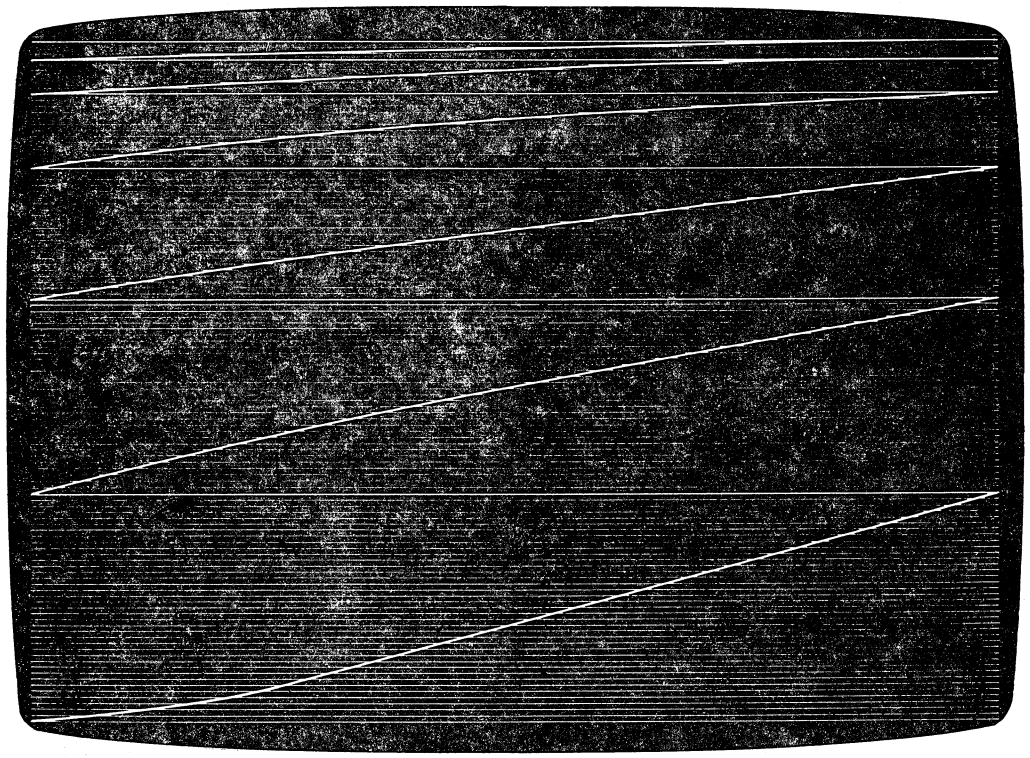

02057

Figure TS4. Raster Display

Figure TS5. Impact Printer Test Print Pattern

TABLE TS2. VOLTAGE LEVEL CHANNEL (RS-232-C/CCITT V.24) INTERFACE CONNECTOR PIN ASSIGNMENTS

PIN NUMBER	CCITT	EIA	SIGNAL NAME	ORIGIN
1	101	AA	Protective Ground	Modem/Terminal
2	103	BA	Transmitted Data	Terminal
3	104	BB	Received Data	Modem
4	105	CA	Request to Send (RTS)	Terminal
5	106	CB	Clear to Send (CTS)	Modem
6	107	CC	Data Set Ready (DSR)	Modem
7	102	AB	Signal Ground	Modem/Terminal
8	109	CF	Received Line Signal Detector (CO)	Modem
9	—	—	Not Used	—
10	—	—	Not Used	—
11	—	—	Secondary Request to Send (SRTS)*	Terminal
12	122	SCF	Secondary Received Line Signal Detector (SCO)	Not Used
13	121	SCB	Secondary Clear to Send (SCTS)	Not Used
14	118	SBA	Secondary Transmitted Data	Not Used
15	114	DB	Transmission Signal Element Timing	Not Used
16	119	SBB	Secondary Received Data	Not Used
17	115	DD	Receiver Signal Element Timing	Not Used
18	—	—	Not Used	—
19	120	SCA	Secondary Request to Send (SRTS)	Terminal
20	108.2	CD	Data Terminal Ready (DTR)	Terminal
21	110	CG	Signal Quality Detector	Not Used
22	125	CE	Ring Indicator	Not Used
23	111	CH	Data Signal Rate Selector	Terminal
24	113	DA	Transmit Signal Element Timing	Not Used
25	—	—	Not Used	—

* Data Set Connector has pin 11 jumpered to pin 19.

TABLE TS3. PERIPHERAL CONNECTOR PIN ASSIGNMENTS

PIN NUMBER	CCITT	EIA	SIGNAL NAME	ORIGIN
1	101	AA	Protective Ground	Printer/Terminal
2	—	—	Not Used	—
3	104	BB	Received Data	Terminal
4	—	—	Not Used	—
5	—	—	Not Used	—
6	107	CC	Data Set Ready (DSR)	Terminal
7	102	AB	Signal Ground	Printer/Terminal
8	109	CF	Received Line Signal Detector (CO)	Terminal
9	—	—	Not Used	—
↓	↓	↓	↓	↓
25	—	—	Not Used	—

TABLE TS4. KEYBOARD INTERFACE SIGNAL LINES

PIN	SIGNAL	PIN	SIGNAL
1	CO	14	High Rate
2	Page	15	Low Rate
3	Data 2^6	16	Odd Parity
4	Data 2^5	17	Even Parity
5	Data 2^4	18	Signal Ground
6	Data 2^3	19	Open
7	Data 2^2	20	Frame Ground
8	Data 2^1	21	Open
9	Data 2^0	22	Open
10	Data Ready	23	+5 V dc
11	Online/Local	24	Signal Ground
12	Full/Half Duplex	25	-12 V dc
13	Break	Shell	Frame Ground

TABLE CRT1. DDLT FOR KEYBOARD DISPLAY

POWER, RASTER, CURSOR, AUDIBLE ALARM, KEYBOARD CONTROL LOGIC, AND VIDEO QUALITY CHECKS

ASSUME

Display terminal is installed per instructions in appendix of Operators Guide/Reference Manual, and is connected to an appropriate ac power source.

CONDITIONS	SITUATIONS									
	1	2	3	4	5	6	7	8	9	10
Does cursor appear on display screen when power is turned on per procedure TS1 or procedure CRT1?	N	N	N	Y	Y	Y	Y	Y	-	OTHER
Turn INTENSITY control on front panel up (clockwise). Does raster appear?	N	N	Y	N	Y	Y	Y	Y	-	
Does circuit breaker CB1 remain set as power is turned on?	N	Y	-	-	-	-	-	-	-	
Can keyboard display portion of procedure TS6 be completed successfully?	-	-	-	-	N	Y	Y	Y	-	
Does video quality appear OK; does H pattern measure approximately 5.3 in (134 mm) high by 8.6 in (218 mm) wide; is display pattern straight on screen; and are all characters clear, crisp, and of uniform height and width?	-	-	-	-	-	N	Y	Y	-	
Does audible alarm sound during appropriate steps of procedure TS6?	-	-	-	-	-	-	N	Y	-	

ACTIONS	SEQUENCE									
Go to table CRT2.	X	-	-	-	-	-	-	-	-	-
Check/replace audible alarm per procedure CRT19.	-	-	-	-	-	-	1	-	-	-
Check INTENSITY control per procedure CRT11.	-	5	-	4	-	-	-	-	-	-
Turn front panel INTENSITY knob fully clockwise and then back it off 1/4 turn. Remove cabinet hood per procedure CRT5. Locate INTENSITY RANGE control (figure CRT14) and vary it to see if raster or cursor appears. If cursor appears, adjust INTENSITY RANGE control until cursor is clearly visible and raster just disappears.	-	1	-	1	-	-	-	-	-	-
Go to table CRT3.	-	4	-	3	3	-	-	-	-	-
Replace control logic PC board per procedure CRT20 if not replace in table CRT3.	-	2	X	-	2	-	2	-	-	-
Replace monitor PC board per procedure CRT12 if not replaced in table CRT3.	-	3	-	2	-	-	-	-	-	-
Check crt cap per procedure CRT15.	-	9	-	-	-	-	-	-	-	-
Replace high-voltage transformer per procedure CRT13 if not replaced in table CRT3.	-	6	-	-	-	-	-	-	-	-
Replace monitor crt per procedure CRT16.	-	8	-	-	-	-	-	-	-	-
Replace yoke assembly per procedure CRT17.	-	7	-	-	-	-	-	-	-	-
Adjust video per procedure CRT10.	-	-	-	-	-	1	-	-	-	-
Replace keyboard per procedure CRT4.	-	-	-	-	1	-	-	-	-	-
Return to table TS1.	-	-	-	-	-	-	-	X	-	-
If vertical linearity (uniform character height) cannot be attained via adjustment, replace vertical choke per procedure CRT14; repeat procedure CRT10.	-	-	-	-	-	2	-	-	-	-
Call for assistance.	-	10	-	5	4	-	-	-	-	X

Notes:
1) Entry to this table is via table TS1.
2) Exit from this table is to: further troubleshooting via subsequent crt tables; go back to table TS1; or call for assistance.
3) All subsequent crt tables exit either: to this table, or to call for assistance.

TABLE CRT2. DDLT FOR KEYBOARD DISPLAY

CIRCUIT BREAKER/SHORTS TEST

ASSUME

Entry from table CRT1. Ensure that circuit breaker CB1 is off (down). Remove cabinet hood per procedure CRT5 and disconnect connectors CP2/CJ2, AP3/AJ3, BP2/BJ2, and BP4/BJ4 (refer to figure CRT5).

CONDITIONS	SITUATIONS										
	1	2	3	4	5	6	7	8	9	10	
Turn circuit breaker CB1 on (up). Does CB1 remain up?	Y	Y	Y	Y	Y	N	-	-	-	O	
Replace connector CP2/CJ2, see figure CRT5. Does it remain up?	Y	Y	Y	Y	N	-	-	-	-	T	
Replace connector AP3/AJ3. Does CB1 remain up?	Y	Y	Y	N	-	-	-	-	-	H	
Replace connector BP2/BJ2. Does CB1 remain up?	Y	Y	N	-	-	-	-	-	-	E	
Replace connector CP4/BJ4. Does CB1 remain up?	Y	N	-	-	-	-	-	-	-	R	

ACTIONS	SEQUENCE									
Return to table CRT1.	X	-	-	-	-	-	-	-	-	-
Replace monitor PC board per procedure CRT12.	-	1	-	-	-	-	-	-	-	-
Check +15-V dc regulator per procedure CRT8.	-	2	1	-	-	-	-	-	-	-
Replace control logic PC board per procedure CRT20.	-	3	2	1	-	-	-	-	-	-
Check power supply per procedure CRT7.	-	4	3	3	1	-	-	-	-	-
Check rear panel components per procedure CRT6.	-	5	4	4	2	1	-	-	-	-
Replace keyboard per procedure CRT4.	-	6	5	2	-	-	-	-	-	-
Call for assistance.	-	7	6	5	3	2	-	-	-	X

TABLE CRT3. DDLT FOR KEYBOARD DISPLAY

AC/DC VOLTAGE MEASUREMENTS

ASSUME

Entry from table CRT1. Power is available to terminal at ac outlet. Remove cabinet hood per procedure CRT5. Multimeter is used to make following measurements; reference procedures CRT6, CRT7, CRT8, and CRT9 if necessary for details on making measurements. Record all voltage measurements as they are made.

CONDITIONS	SITUATIONS									
	1	2	3	4	5	6	7	8	9	10
Check ac to power supply at CP2/CJ2. See figures CRT6 and CRT8 for measurement points and voltage ranges. OK?	Y	Y	Y	Y	N	-	-	-	-	OTHER
At AP3/AJ3 (see figure CRT5), check for proper voltage readings. Are voltages OK?	Y	Y	Y	N	-	-	-	-	-	
Check for +21.5 to +25.3 V dc at pin 1 of connector BP2/BJ2; see figures CRT9 and CRT10. Are voltages OK?	Y	Y	N	-	-	-	-	-	-	
Measure voltages on monitor PC board per procedure CRT9. Are voltages OK?	Y	N	-	-	-	-	-	-	-	
ACTIONS	**SEQUENCE**									
Return to entry table CRT1.	X	-	-	-	-	-	-	-	-	-
If not done previously, check +15-V dc regulator per procedure CRT8.	-	1	1	-	-	-	-	-	-	-
If not done previously, replace monitor PC board per procedure CRT12.	-	2	-	-	-	-	-	-	-	-
If +418 to +512-V dc measurement from procedure CRT9 is bad, replace high-voltage transformer per procedure CRT13.	-	3	-	-	-	-	-	-	-	-
If not done previously, check power supply per procedure CRT7.	-	-	2	2	2	-	-	-	-	-
If not done previously, replace control logic PC board per procedure CRT20.	-	-	-	3	-	-	-	-	-	-
If not done previously, check rear panel components per procedure CRT6.	-	-	-	-	1	-	-	-	-	-
Disconnect keyboard per procedure CRT4 and repeat measurements at AP3/AJ3. If now OK, replace keyboard per procedure CRT4.	-	-	-	1	-	-	-	-	-	-
Call for assistance.	-	4	3	4	3	-	-	-	-	X

Procedure CRT1 – Turning On Display Terminal Power

To turn on power to the display terminal do the following:

1) Ensure that circuit breaker CB1 on terminal rear panel is off (down).
2) Ensure that terminal ac power cord is plugged into appropriate outlet.
3) Ensure that all interequipment cabling is properly connected; refer to figure TS1.
4) If RS-232-C communication channel is being used, ensure that modem ac power cord is plugged in and that modem power is on.
5) Check to ensure that all external keyboard control switches are set for desired mode of terminal operation; refer to Operators Guide/Reference Manual if necessary.
6) Move circuit breaker CB1 on terminal rear panel to on position (up). In approximately 30 seconds, a blinking cursor should appear on display screen in upper left corner (page mode) or lower left corner (scroll mode); if not, increase intensity until cursor appears.

Procedure CRT2 – Turning Off Display Terminal Power

To turn off power to the display terminal, do the following:

1) Move circuit breaker CB1 on terminal rear panel to off position (down).

Procedure CRT3 – Checking the Keyboard

To check the keyboard for proper operation, do the following:

1) Ensure that the cable between the video display assembly and keyboard assembly of the terminal is properly connected. If keyboard is mounted under front of display chassis, it is necessary to raise the lower front edge of the display chassis to slide the keyboard assembly forward before checking cable connection.
2) Ensure that ON LINE/LOCAL and FULL DUP/HALF DUP switches on keyboard are in LOCAL and HALF DUP positions.
3) Ensure that PAGE key on keyboard is down to select page mode operation.
4) Ensure that 96/64 switch on keyboard is up to select 95 character ASCII subset.
5) Turn on keyboard display per procedure CRT1 if it is not already on.

6) Key in the following alphanumeric characters and symbols, in sequence, using the SHIFT or SHIFT LOCK keys as necessary to access uppercase or lowercase. The first character entry of the sequence is a space (space bar on keyboard). There are 95 key entries in the following listing; at the 73rd character position of the display line, a beeper signal will sound.

```
  ! " # $ % & ' ( ) * + , - . / 0 1 2
3 4 5 6 7 8 9 : ; < = > ? ` a b c d e
f g h i j k l m n o p q r s t u v w x
y z { | } ~ @ A B C D E F G H I J K L
M N O P Q R S T U V W X Y Z [ \ ] ^ _
```

These characters and symbols should appear on display screen just as they are keyed in.

7) Remove cabinet hood of display assembly per procedure CRT5.

8) Set Internal Test switch on control logic PC board to enable position (refer to figure CRT1).

9) Press LINE FEED and then CARRIAGE RETURN keys on keyboard to move cursor to the beginning of a new line.

10) Key in the following control codes in sequence. Use the CONTROL key plus alpha key for the symbol listed, except when a specific control key name or symbol is listed. In these latter cases, the key entry only (without CONTROL) is sufficient. Positioning of the SHIFT or SHIFT LOCK keys during these entries has no effect.

@	A	B	ETX	D	E
F	G	←	I	LINE FEED	K
L	CARRIAGE RETURN	N	O	P	Q
R	S	T	U	V	W
X	Y	↑	ESC	M	H
J	C	RUBOUT			

Compare the symbols generated for these entries with the control code symbols shown in figure CRT2.

11) Check action of REPEAT key by pressing and holding it and then any character key; character entry should repeat until REPEAT key is released.

12) Return Internal Test switch to disable position; refer to figure CRT1 for switch location if necessary.

13) Return all keyboard control switches to their normal operating positions.

14) If keyboard fails on any of the preceding tests, replace keyboard per procedure CRT4. Then rerun this procedure and go to table CRT1 or to procedure TS6, depending on which one directed you to this procedure.

Procedure CRT4 – Replacing the Keyboard

To replace the display terminal keyboard, do the following:

1) Turn terminal power off per procedure CRT1.

2) If keyboard is mounted under front edge of display assembly, lift lower front edge of display just enough to slide keyboard out from under it.

CAUTION

If necessary to remove keyboard by lifting display assembly be careful not to allow the assembly to tip over backwards.

3) Disconnect keyboard display interconnecting cable per procedure TS3.

4) Turn keyboard assembly over and remove six screws holding keyboard cover to keyboard chassis (see figure CRT3).

5) Return keyboard to upright position and lift off cover (see figure CRT3).

6) Remove cable connector from edge of keyboard PC board.

7) Remove two screws that hold PC board and mask to chassis on one end, and loosen two screws on other slotted end. Lift PC board and mask out of chassis.

8) Install new keyboard by sliding it under two screws still in chassis and position it properly over remaining two mounting-screw holes.

9) Insert two screws removed in step 7 and tighten all four screws to secure PC board and mask to chassis.

10) Attach connector to PC board.

11) Place cover over assembly, positioning cover so that keys do not bind.

12) Hold cover in place, turn assembly over and insert six screws in bottom of chassis. Tighten screws to secure chassis to cover.

13) Complete installation of new keyboard by doing steps 2 and 3 in reverse action and sequence.

14) Check operation of replacement keyboard per procedure CRT3. Whether or not replacement keyboard corrects malfunctions, return to DDLT for further tests or directions.

Procedure CRT5 – Removing the Display Cabinet Hood

To remove the display cabinet hood, proceed as follows:

WARNING

Rough handling or abuse of the display assembly can cause the crt to implode with tremendous force, thereby presenting a hazard to persons in the immediate area. Always exercise care when working on or near the crt. Also be careful not to nick or scratch the crt since this can weaken it. Wear safety goggles and heavy gloves when handling the crt.

WARNING

With the cabinet hood removed and power on, shock hazards exist in the areas of the high-voltage transformer, the crt anode lead, and portions of the monitor PC board. Try to avoid touching areas of the crt beyond the yoke assembly and keep tools away from the high-voltage transformer and crt unless terminal power is off and the crt has been discharged.

1) Remove two hood-retaining screws at rear of cabinet (figure CRT4).

2) Move cabinet hood slightly back and then lift up and off cabinet base.

To install cabinet hood, do the following:

3) Position cabinet hood on track at rear of base and slide hood forward into place.

4) Secure hood to base with two retaining screws at rear of cabinet.

Procedure CRT6 — Check/Replace Rear Panel Components

The panel on the rear of the display terminal carries the peripheral connector, the data set connector, the ac line cord, the TEST/NORMAL switch, the RFI line filter (internally), and circuit breaker CB1 (terminal on/off switch). Of these components, the RFI line filter and CB1 are replaceable items. The following procedure describes how to troubleshoot these two items and how to replace them if necessary. Normally, the line filter or CB1 is only suspect for a malfunction if either CB1 trips repeatedly upon successive attempts to set it, or display terminal does not appear to have power (even through CB1 remains set when switched on).

To check the line filter and CB1, do the following:

1) Set multimeter for measuring ac input power and set range switch for measuring anticipated voltage (120 or 220/240 V ac).
2) Withdraw display terminal power plug slightly from outlet so that voltage can be checked directly at that point. Check line voltage by placing one probe of meter on hot prong of plug and by placing other probe of meter on neutral prong of plug. Readings should be from 104 to 127 V ac for a 120-V terminal, from 195 to 246 V ac for a 220/240-V low-line terminal, and from 216 to 268 V ac for a 220/240-V normal-line terminal. If voltage reading is not within proper range, notify power company of problem; if readings are within tolerance, continue with following steps.
3) Remove display terminal hood per procedure CRT5.
4) If circuit breaker CB1 will not remain set when turned on (up), go to step 8 of this procedure; if CB1 remains set when turned on, continue with the following steps.
5) Leaving display terminal power on, locate connector CP2/CJ2 and carefully move it to a position so that voltage readings can be taken from the back side of CJ2 (see figures CRT5 and CRT6).

WARNING

If LOW/NORMAL connector in following step requires correction, be sure to turn display terminal power off and unplug line cord from outlet before attempting to alter the connection. Failure to unplug the line cord presents a shock hazard that could result in serious injury or death.

6) On 220/240-V display terminals, check to ensure that connection of neutral line is to the proper LOW or NORMAL connector going to CJ2. The LOW connector is used on display terminals having a line voltage input in the 195 to 246 V ac range, and the NORMAL connector is used for display terminals having a line voltage input in the 216 to 268 V ac range (see figure CRT6).

7) Leaving multimeter with settings used for readings in step 2, make the appropriate following voltage measurement(s) at the rear of CJ2. If power is off, turn power on per procedure CRT1.

120-V Terminals	220-V Terminals	240-V Terminals
CJ2-1 to CJ2-2	CJ2-1 to CJ2-4	CJ2-1 to CJ2-6

If proper voltage is measured at CJ2, rear panel assembly is OK; return to DDLT for further tests or directions. If no voltage is measured at CJ2, continue procedure by doing the following steps.

8) Ensure that display terminal power is off (procedure CRT2) and unplug ac line cord from outlet.

CAUTION

If display terminal uses a modem communication facility interface, ensure that modem power is off and/or modem ac line cord is unplugged before performing the following step. Peripheral printer power should also be off if printer is part of display terminal configuration (see procedure TS2 if necessary).

9) Remove data set cable and peripheral equipment cable (if present) from display terminal rear panel per procedure TS3.

10) Disconnect CJ2/CP2, which connects ac entry panel to power transformer primary (see figure CRT5).

11) Disconnect CJ1/CP1 from inside of rear panel (just behind the external data set and peripheral connectors on rear panel).

12) Remove six rear-panel retaining screws (see figure CRT6), and withdraw rear panel from display chassis just far enough to remove ground wire connections on back side of rear panel.

13) Remove ground wires from E2, E3, and E4 inside of terminal rear panel, just above data set and peripheral connectors.

14) Remove entire rear panel assembly from display chassis.

15) Remove ac entry panel cover by removing two retaining screws near center of cover (see figure CRT6) and lifting cover off rear panel assembly.

16) Use ohmmeter on a low-resistance setting (RX1) and on a higher resistance setting (RX100) to make the following checks on the RFI line filter (FL1).

Attach Probe To	Check with 2nd Probe	Reading
FL1-1	FL1-4	Continuity (0 ohm)
	FL1-2	No continuity
	FL1-3	No continuity
	FL1-5	No continuity
FL1-3	FL1-5	Continuity (0 ohm)
	FL1-2	No continuity

If the preceding readings cannot be obtained, the line filter is faulty and must be replaced; however, continue with the following steps to check the circuit breaker (CB1) at this time.

17) Use ohmmeter to check continuity of CB1 across CB1-1 and CB1-2 terminals (on back of circuit breaker). Make this check with circuit breaker switched to off position to ensure that no continuity exists when CB1 if off; then make check with CB1 on to ensure that continuity (0 ohm) exists when CB1 is on. If both of these readings cannot be obtained, CB1 requires replacement.

Steps 18 through 21, following, describe how to replace CB1, and following these steps are instructions for replacing line filter FL1. To remove CB1, proceed as follows:

18) Remove wires from CB1-2 and CB1-1; wire on CB1-1 comes from FL1-4, while wire on CB1-2 comes from TB1-1.

19) Remove two screws (on outside of rear panel) that hold CB1 to rear panel, and then remove CB1 from rear panel.

To install CB1, do the following:

20) Position CB1 in rear panel from inside so that the mounting holes align with mounting holes in rear panel, and then secure CB1 to rear panel with two screws removed in step 19.

21) Connect wire from FL1-4 to terminal CB1-1, and then connect wire from TB1-1 to terminal CB1-2 (see figure CRT6).

To remove line filter FL1, do the following:

22) Remove two hex standoffs (for ac entry panel cover) that secure FL1 to rear panel.

23) Remove wire running from FL1-4 to CB1-1 by removing connector on terminal CB1-1.

24) Unsolder wires from FL1-1, -2, -3, -4, and -5, and then remove FL1 from rear panel assembly.

To install line filter FL1, do the following:

25) On 120-V ac terminals make the following solder connections:

- Connect black (hot) ac input wire to FL1-1
- Connect white (neutral) ac input wire to FL1-3
- Connect green (chassis ground) wire from ground lug E1 to FL1-2
- Connect short yellow wire, removed in steps 23 and 24, to FL1-4, and then connect other end (fast-on connector) to CB1-1
- Connect yellow wire from CJ2-2 to FL1-5

On 220/240-V ac terminals make the following solder connections:

- Connect brown (hot) ac input wire to FL1-1
- Connect blue (neutral) ac input wire to FL1-3
- Connect green/yellow (chassis ground) wire from ground lug E1 to FL1-2
- Connect short yellow wire, removed in steps 23 and 24, to FL1-4, and then connect other end (fast-on connector) to CB1-1
- Connect yellow wire from CJ2 LOW/NORMAL connector to FL1-5

26) Position line filter FL1 on rear panel mounting lugs and secure with hex standoffs.

To reinstall rear panel assembly in display chassis, do the following:

27) Replace ac entry panel cover and secure with two retaining screws.

28) Position rear panel assembly near rear of display chassis so that ground wires, removed in step 13, can be fastened to lugs E2, E3, and E4 with hex retaining nuts.

29) Position rear panel assembly so that it can be secured with six retaining screws removed in step 12, secure panel with screws, and then reconnect CJ1/CP1 (refer to step 11).

30) Reconnect CJ2/CP2 connector from rear panel to power transformer primary.

31) Reconnect display terminal signal cables per procedure TS3, and then return to DDLT to determine if there are any further tests or directions to be done before replacing cabinet hood and turning display terminal power on per procedure TS1.

Procedure CRT7 – Check/Replace Power Supply Assembly

This procedure describes how to check power supply operation and how to replace either faulty power supply components or the entire power supply assembly.

WARNING

When working on power supply, be aware that trying to intermix components of the two power supplies (the newer vs the older) will cause damage to the equipment not to mention the power supply itself. To play safe, go from the new to the old power supply when reinstating or refurbishing this equipment. Do not go from the old to the new condition when working within these procedures.

Procedure CRT6 should be done prior to this one to ensure that the proper ac input to the power supply is available via connector CJ2/CP2. Also, before beginning this procedure, be sure there is sufficient space available for removing the monitor from the display chassis and setting it beside the display chassis while the two units remain interconnected.

To check power supply operation, do the following:

1) Turn power off per procedure CRT2 and unplug ac line cord from outlet.
2) Remove display terminal cabinet hood per procedure CRT5.
3) Discharge crt (see step 2 of procedure CRT13 if necessary).
4) Remove two upper screws holding monitor chassis to bezel of display chassis.
5) Loosen but do not remove two lower screws holding monitor chassis to bezel of display chassis. They should be loose enough to slip lower front legs of monitor chassis up and off later in this procedure (refer to figure CR17).
6) Remove two hex screws from rear two chassis legs of monitor assembly, and ensure that any ground wires attached to the monitor chassis at either of these two points are free of the display chassis.

Before doing next step ensure there is enough room to set monitor chassis on bench or desktop just to left (side away from logic module) of display chassis base.

WARNING

Use extreme care in touching or handling the monitor chassis because rough handling can cause the crt to implode with tremendous force, which could result in serious injury. Do not nick or scratch glass or subject crt to undue force while handling display assembly. Wear protective gloves and safety goggles during this next step as a precaution.

7) Grasp display assembly by the chassis support brackets, lift it up and back, and pivot it slightly clockwise. Place it on a surface just to the left of display chassis (side away from logic module assembly). As this is being done, check to ensure that interconnecting cables are free enough to enable monitor to clear display chassis without stress on cables or component parts of either assembly.

8) Visually check both assemblies to ensure that no interconnecting cabling has pulled loose during the preceding step.

9) Plug ac power cord into appropriate outlet and turn display terminal power on per procedure CRT1.

NOTE

If voltages from power supply are low, check for crimps in cable going to logic module assembly or crimps in fast-on connectors on the power supply PC board. To correct crimp, remove insulation, if present, and solder contact to wire.

10) Using a multimeter set to measure about 25 to 50 V ac and, with one lead connected to a good ground (E2, E3, or E4 on rear panel), check for ac voltage readings at J4 and J5 on power supply PC board and at ac inputs to CR1 (see figure CRT8). Reading should be about 20 V ac (RMS) each at J4 and J5 and about 8.6 V ac (RMS) at each CR1 input.

11) If any of the check points in the preceding step fail to indicate an ac voltage, turn display terminal power off (procedure CRT2), remove connector from any one of the test points that failed to show a reading, connect meter lead to that connector, and then, reapply power (procedure CRT1) to see if reading is now obtainable. If no ac reading can be obtained in this manner, power transformer is faulty and requires replacement; go to step 13 of this procedure.

If measurements in step 10 indicated ac voltage was present or if the check in this step gives an ac reading, turn terminal power off (procedure CRT2), disconnect meter lead from tested connector, return connector to proper location on power supply, turn terminal power back on (procedure CRT1), and continue with next step.

12) Check and record voltage readings at connector HJ2/HP2 per listing for that connector on figure CRT8; make each check twice, once with HP2/HJ2 connected and once at HJ2 on power supply PC board with HP2 removed from HJ2. Notice that there are both ac and dc, and negative and positive outputs from this connector; be sure to set meter properly for output to be measured.

The following lists possible results from these two readings, and indicates the possible actions for each result.

a) All outputs measure as indicated in figure CRT8; return to DDLT for further tests or directions.

b) 19 V ac measures too high or too low during both checks; replace power supply transformer.

c) 19 V ac is low with HP2/HJ2 connected and OK with HP2 removed; possible short in load (check circuits beyond HP2 connector).

d) -12, +12, or +5 V dc is too high with or without HP2/HJ2 connected; replace power supply PC board.

e) -12, +12, or +5 V dc is low with HP2/HJ2 connected and OK with HP2 removed; troubleshoot for shorts in load (circuits beyond HP2).

f) -12, or +12 V dc has no output or low output with or without HP2/HJ2 connected; replace power supply PC board.

g) +5 V dc has no output or low output with or without HP2/HJ2 connected; replace power supply PC board first, and if fault is not corrected, replace CR1.

h) +23 V dc too high with or without HP2/HJ2 connected; replace power supply transformer.

i) +23 V dc low with HJ2/HP2 connected and OK with HP2 removed; check for short in load (circuits beyond connector HP2).

j) +23 V dc low or no output with or without HP2/HJ2 connected; replace power supply PC board first, and if fault is not corrected, replace power supply transformer.

k) A power supply fault exists, but none of the above actions correct it; replace power supply assembly.

To remove the power transformer from the display assembly chassis, do the following:

13) Power-off terminal per procedure CRT2 and remove ac power plug from site outlet.

14) Tag wires from power transformer to J3, J4, and J5 on power supply PC board, and tag wires from power transformer to AC terminals on CR1. Remove the wires just tagged from their respective connectors.

15) Disconnect CJ2/CP2 and HJ2/HP2 (see figure CRT8).

16) Remove hex nut holding transformer safety ground wire to display chassis and then remove ground wire from lug.

17) Remove four hex nuts holding power transformer to power supply chassis, and remove power transformer.

To install power transformer in the display assembly chassis, do the following:

18) Position power transformer over mounting lugs on power supply chassis. See figure CRT8 for proper transformer positioning.

19) Do steps 14 through 17 preceding in reverse order and sequence of action. If new transformer, use tagged wires of old one as a guide.

To remove rectifier CR1 from the power supply assembly, do the following:

20) Power-off terminal per procedure CRT2 and remove ac power plug from site outlet.

21) Tag wires connecting to CR1 for later identification and then remove wires from CR1.

22) Remove two hex nuts holding CR1 to power supply chassis, and then remove CR1 from chassis.

To install CR1, do the following:

23) Apply thermal compound to bottom of CR1 mounting bracket and to power supply chassis where CR1 mounts.

24) Position CR1 on power supply chassis mounting lugs and secure CR1 with two hex nuts removed in step 22.

25) Connect wires to CR1 that were removed in step 21, preceding.

To remove power supply PC board, do the following:

26) Turn off terminal power per procedure CRT2 and remove ac plug from outlet.

27) Tag wires going to connectors J3, J4, J5, and J6 on power supply PC board, and then remove these wires from board connectors.

28) Remove four screws (one at each corner of PC board) holding power supply PC board to power supply chassis, and then remove the PC board.

To install power supply PC board, do the following:

29) Position power supply PC board over four mounting holes in power supply chassis as shown in figure CRT8, and then secure PC board to chassis with four screws removed in step 28, preceding.

30) Replace wires removed in step 27, preceding.

To remove power supply assembly, proceed as follows:

31) Turn off terminal power per procedure CRT2 and remove ac plug from outlet.

32) Remove hex nut that secures power transformer safety ground wire, and then remove ground wire.

33) Disconnect connectors CJ2/CP2 and HJ2/HP2 (see figure CRT8).

34) Remove four hex nuts that secure power supply chassis cabinet base: one screw is in front and one screw is behind the power supply transformer, and one screw is at each corner of the chassis opposite the transformer.

35) Lift power supply assembly up and out of display cabinet base.

To install the power supply assembly, do the following:

36) Position power supply assembly over mounting lugs in display cabinet base, set assembly down on lugs, and then secure assembly in place with four hex nuts removed in step 34, preceding.

37) Reconnect connectors CJ2/CP2 and HJ2/HP2, and then connect and secure safety ground wire between power transformer and display chassis with hex nut.

38) Return to beginning of this procedure and repeat appropriate steps for testing power supply operation before returning to the DDLTs for further tests or directions.

To install the monitor assembly, do the following:

39) Do steps 4 through 7 of this procedure in reverse order and sequence of action to install the monitor assembly on the display chassis base. Ensure that terminal power is off (procedure CRT2) and ac line cord is unplugged before doing these steps.

Procedure CRT8 – Check/Replace 15-V Regulator Components

This procedure describes how to check operation of the 15-V dc regulator, and how to replace faulty components if necessary. This procedure should normally not be done without first doing procedures CRT6 (Check/Replace Rear Panel Components) and CRT7 (Check/Replace Power Supply Assembly).

To check operation of the 15-V dc regulator, do the following:

NOTE

Some regulators have an input fuse on them (see figure CRT10). If regulator has no output, as determined during the following procedure, check fuse before replacing any other components.

1) Remove cabinet hood per procedure CRT5.

2) If terminal power is not already on, turn power on per procedure CRT1.

3) Set multimeter for measuring +15 volts dc.

4) Test output of regulator by measuring voltage on pins 8 and 22 of BP4 with respect to pin 3 (ground) of BP4 (see figure CRT9), and record the voltages measured.

5) Turn terminal power off per procedure CRT2.

6) Disconnect connector BP5 (from the 15-V regulator to the monitor PC board via BP4), turn terminal power back on per procedure CRT1, and then measure and record outputs from BP5-1 and BP5-3 with respect to BP5-2 (ground). Refer to figures CRT9 and CRT10.

7) Readings in both steps 4 and 6 should be +15 ±0.75 V dc. If readings are OK, return to the DDLTs for further tests or directions; if not, examine the following list and take the appropriate action.

   a) If both readings are too high, check/replace diodes or replace pass transistor and regulator circuits (see following steps of this procedure).

   b) If reading is low in step 4, and OK in step 6, check for shorts in load (monitor PC board), or replace pass transistor and regulator circuits (see following steps in this procedure).

   c) If readings are too low in both steps 4 and 6, replace pass transistor and regulator circuits (see following steps of this procedure).

   If any of the actions in the preceding list are taken, return to steps 2 through 7 of this procedure to retest regulator operation after completing the action and before returning to the DDLTs for further instructions.

To check regulator diodes, proceed as follows:

8) Turn terminal power off per procedure CRT2 and remove ac plug from outlet.

9) Set ohmmeter for making resistance checks on RX1 scale.

It may be necessary to remove the regulator assembly to make the following resistance checks. If so, skip to step 13 to remove the regulator and then return to complete the following checks.

10) Measure the forward resistance of each diode by placing the + meter lead on the anode of the diode and the - meter lead on the cathode (banded end of diode; see figure CRT10). The resistance measured in this direction should be about 1 or 2 ohms. If higher resistance is measured, diode should be replaced.

11) Set ohmmeter for making high resistance checks (RX1000 scale).

12) Measure the reverse resistance of each diode by placing the - meter lead on the anode of the diode and the + meter lead on the cathode (banded end of diode; see figure CRT10). The resistance measured in this direction should be greater than 1 kilohm. If not, diode should be replaced. If diode checks are OK, skip to steps of this procedure for removing and replacing the pass transistor and regulator circuits. If diode checks are not OK, proceed with the following steps for removing and replacing a diode.

To remove regulator assembly and replace faulty diode, do the following:

13) Ensure that terminal power is off and ac plug is removed from outlet (see step 8, preceding).

14) Disconnect BP2, from power supply to regulator, and BP5, from regulator to monitor PC board (see figure CRT9).

15) Remove two screws securing regulator heat sink to monitor chassis, and withdraw regulator assembly from rear of monitor chassis.

16) Place heat sink clips around diode to be removed to protect adjacent components from heat damage.

17) Unsolder faulty diode and remove from circuit.

18) Check new diode per steps 9 through 12, preceding, before installing it in circuit.

19) Solder new diode in circuit using heat sink clips to protect both the new diode and the adjacent components from heat damage.

20) Recheck all diodes per steps 9 through 12, preceding, to ensure none have been damaged during soldering.

21) Install regulator assembly in monitor chassis by performing steps 14 and 15 in reverse order and sequence of action.

To remove and replace pass transistor and regulator circuits, do the following:

22) Ensure that terminal power is off and ac line cord removed from outlet (see step 8, preceding).

23) Remove the two screws holding each of the circuits to the regulator heat sink, and then, pull each circuit out of its respective socket.

24) Clean surface of heat sink where circuits make contact with it, ensure that old mica insulating washers do not remain stuck to heat sink, and then apply thermal compound (CDC 51003962) to area of heat sink where circuits are mounted.

25) Remove mica insulating washers from new circuits and apply thermal compound to back side of each circuit. Then, install mica washer on each circuit.

26) Install circuits in heat sink socket and secure in place with screws (2 each) removed in step 23. When installing new circuits, ensure that pass transistor is installed in upper socket and regulator circuit in lower socket (refer to figure CRT9).

27) After replacing circuits, retest regulator operation per steps 2 through 7 of this procedure before returning to the DDLTs for further directions.

Procedure CRT9 — Measuring Voltages on Monitor PC Board

This procedure describes how to measure +15, +5, -190, +45, and +465 V dc on the monitor PC board. This procedure should follow procedure CRT8 since all of the voltages on the monitor PC board are derived from the +15-V dc output of the regulator circuit. Refer to figure CRT11 to locate the points on the PC board for making the following measurements.

To measure +5 and +15 V dc on the monitor PC board, do the following:

1) Set voltmeter to measure +15 V dc.
2) Remove display cabinet hood per procedure CRT5.
3) Ensure that terminal power is on (see procedure CRT1).
4) Connect - lead of voltmeter to ground (E1 on monitor chassis).
5) Connect + lead of voltmeter to pin 8 of BP4, and check that meter reads +15 ±0.75 V dc.
6) Move + lead of voltmeter to pin 22 of BP4, and check that meter again reads +15 ±0.75 V dc.
7) Move + lead of voltmeter to + side of capacitor C5A, and check that meter reads +5 ±0.25 V dc.

To measure -190 V dc, do the following:

8) Set voltmeter to measure -190 V dc.

NOTE

If meter has polarity reversing switch, reverse meter lead connections given in the following steps (9 and 10) and use reversing switch instead.

9) Connect + meter lead to ground (E1 on monitor chassis).
10) Connect - meter lead to R1A as shown in figure CRT11, and check that meter reads -190 ±25 V dc.

To measure +45 V dc, do the following:

11) Set voltmeter to measure +45 V dc.
12) Connect - lead of meter to ground (E1 on monitor chassis).
13) Connect + lead of meter to diode CR4A as shown in figure CRT11, and check that meter reads +45 ±4.5 V dc.

To measure +465 V dc, do the following:

14) Set voltmeter to measure +465 V dc.

15) Connect - lead of meter to ground (E1 on monitor chassis).

16) Connect + lead of voltmeter to pin 16 of BP4, and check that meter reads +465 ±47 V dc.

17) Check that all measured voltages fall within the indicated tolerances. Failure of any voltage to be within tolerance normally indicates a fault either in the source voltage (+15 V dc from the 15-volt regulator), in the monitor PC board, or in the high-voltage transformer. Whether or not a fault is indicated, return to the DDLT for further tests or directions.

Procedure CRT10 — Video Monitor Adjustments

To adjust the video monitor for correct video display, do the following. Refer to figures CRT12, CRT13, and CRT14 to locate adjustment controls noted in the following steps.

1) If adjustment is required because of yoke replacement or crt replacement, check that high voltage lead is connected, video PC board connectors are all in place, and BP5 and AP4 from +15-V dc regulator are connected.

2) Connect power cord to ac outlet and turn power on per procedure CRT1.

WARNING

With power applied, high voltage is present at high-voltage transformer and crt anode lead. Exercise caution when working in these areas so as to avoid a severe shock.

3) Move TEST/NORMAL switch on terminal rear panel to TEST position, and move keyboard FULL DUP/HALF DUP and ON LINE/LOCAL switches to FULL DUP and LOCAL positions.

4) Ensure that PAGE key on keyboard is down to select page mode of operation.

5) Ensure that 96/64 key on keyboard is up to select 96-character code set.

6) Press CLEAR key on keyboard.

7) Adjust INTENSITY control on terminal front panel until blinking cursor is clearly visible on screen but raster cannot be seen.

NOTE

Before making centering and tilt adjustments, attach clear plastic overlay that precedes figure CRT16 to center of display screen with masking tape.

To make tilt adjustments, do the following:

8) Fill display area of screen with uppercase Hs in the following manner:
   a) Press SHIFT LOCK key on keyboard down.
   b) Press and hold REPEAT and then H keys. If display line feeds and carriage returns at end of first line, continue holding REPEAT and H keys until screen fills with Hs. If display does not automatically line feed at end of first line, release REPEAT and H keys, press LINE FEED key and then CARRIAGE RETURN key. This will move cursor to left margin of second display line. Continue process of filling one line at a time with Hs until all 24 lines of display are filled.
9) Check to see if video display of Hs appears tilted on the screen. If so, do steps 9a, 9b, and 9c.
   a) Loosen yoke clamp screws until yoke can be rotated on neck, but will remain in position to which it is moved.
   b) Rotate yoke back and forth on neck until H pattern display is no longer tilted.
   c) Hold yoke in position to keep display pattern straight on screen and tighten clamp screw on yoke.

To center the display pattern on the screen, do the following:

10) Check to see if display pattern is centered on display screen. If not, adjust centering tabs on yoke (see figure CRT13) until display is centered. Initial setting for centering tabs should be 180 degrees apart.

To make linearity adjustments, do the following:

11) Observe that H patterns on the left and right sides of the screen are same height as those in center of screen. If not, adjust vertical linearity pot on monitor PC board until height is uniform (see figure CRT14).
12) Observe H characters on screen to make certain that left or right side of display is not distorted. If distortion is present, loosen yoke and ring magnet clamps slightly and slide shielding sleeve back and forth on neck gently until minimum distortion is obtained.

Adjustment of shielding sleeve (horizontal linearity) affects horizontal width. Refer to size adjustments later in this procedure and perform horizontal linearity and horizontal width adjustments alternately until best overall results are obtained.

13) After yoke and shielding sleeve are correctly adjusted and crt ground clip is properly under sleeve, tighten yoke and ring magnet clamp screws until they are snug (do not use force).

To adjust the height and width of the display pattern, do the following:

14) Adjust vertical height by turning adjustment screw (figure CRT14) until height of display pattern is about 5.25 in (133 mm).

15) Adjust horizontal width of display pattern to 8.0 in (203 mm) by turning width adjustment (figure CRT14) until proper width is obtained. Use a nonmetallic 3/32-inch hex driver for making this adjustment.

To make focus adjustments, do the following:

16) Press the CLEAR key on the keyboard to clear the display screen of the Hs display.

17) Enter a display screen of lowercase m's; refer back to step 8b of this procedure if necessary. Ensure that SHIFT LOCK key is released before attempting to enter lowercase m's.

18) Turn front panel INTENSITY control all of the way up (clockwise) and then back it off about 1/4 turn.

19) Turn Contrast control (figure CRT14) to full clockwise position.

20) Adjust the Intensity Range control (figure CRT14) so that raster (background scan lines) just disappears but the m characters on the screen remain clearly visible. To check for proper adjustment, turn up front panel INTENSITY control to ensure that raster can still be seen, and then turn front panel INTENSITY control back down to normal viewing brightness.

21) Adjust the Focus control (figure CRT14) to obtain the best resolution of m characters on entire display area.

22) Adjust the magnet ring tabs (figure CRT13) to minimize any tails or halos visible on the displayed characters, especially those characters at corners of display area.

23) If necessary, repeat steps 20 through 22 to obtain best possible character display and resolution across the entire display area. Refer to figure CRT15 for characteristics to be looked for in the display.

The following steps check the display area for barreling and pincushion distortion. If the check indicates that correction is required, the following items are needed to make adjustments.

- 1/4-inch diameter wooden dowel approximately 12 inches long
- 1/4-inch masking tape
- Cutting tool or scissors
- CRT plastic overlay to fit a 12-inch crt screen. A plastic overlay precedes figure CRT16 that has an ideal rectangle marked on surface to help align raster.
- Adhesive, CDC part number 51004063
- 2.0-gauss correction magnet (yellow code), CDC part number 51917051
- 3.0-gauss correction magnet (silver code), CDC part number 51917052
- 4.0-gauss correction magnet (red code), CDC part number 51917053
- 5.7-gauss correction magnet (green code), CDC part number 51917054

To check and make adjustments for geometric distortion, do the following:

24) Press CLEAR key on keyboard to clear the display.

25) Enter a full display screen of uppercase Hs; refer to step 8 of this procedure if necessary. Ensure that SHIFT LOCK key is pressed before entering the Hs.

26) Check for geometric distortion (barreling and pincushioning) of the display pattern. Attach overlay noted previously to crt screen with masking tape so that center rectangle of overlay fits over display pattern on screen. If display pattern edges balloon out of double overlay lines at sides, barreling distortion is present. If edges of display pattern squeeze in past inner double line at center of sides, pincushioning distortion is present. Refer to figures CRT17 and CRT18.

27) To correct barreling or pincushioning distortion, first fasten the 2.0-gauss magnet (yellow code) to one end of the wooden dowel with masking tape. Use enough tape to hold magnet securely to dowel (see figure CRT18).

28) While using mirror to watch display pattern, move magnet back and forth around yoke coil toward side of pattern requiring correction. Note the effects on the display pattern as the magnet is moved to various positions. Also note that the direction in which the magnet is facing affects the display: a magnet with the colored end facing in one direction across the yoke coils has the effect of pulling the display edges out, while reversing the colored end of the magnet has the effect of squeezing the display edges in. Refer to figure CRT19.

29) If in doing step 28 the display pattern overreacts, break the 2.0-gauss magnet in half with a pliers and repeat the process. If the display pattern does not react enough, use progressively larger magnets (3.0, 4.0, or 5.7) or more than one magnet to achieve the desired results.

30) When desired or best possible correction is achieved, note the position of the magnet relative to the yoke coils. Then turn crt power off, remove magnet from dowel, and fasten magnet into position on yoke with adhesive. It may be necessary to hold magnet in place with masking tape while adhesive cures.

31) If necessary to correct distortion on other perimeter edges of display pattern, apply power to the terminal and repeat this process from step 24.

32) When all necessary corrections have been made, remove masking tape from correction magnets mounted on yoke and remove overlay from face of crt. Replace cabinet hood and prepare terminal for use or return to DDLT for further tests and checks if necessary.

Procedure CRT11 – Check/Replace Front-Panel INTENSITY Control

To check the INTENSITY control on the front panel of the display terminal, proceed as follows:

1) Turn off power per procedure CRT2 and remove ac plug from outlet.

2) Remove terminal cabinet hood per procedure CRT5.

3) Set ohmmeter to RX1000 scale.

4) Disconnect cable connector BP3/BJ3 leading from monitor assembly to INTENSITY control on terminal front panel. See figure CRT20.

5) Attach one lead of ohmmeter to BJ3-2 (center terminal of connector leading to INTENSITY control), and connect the other ohmmeter lead to one of the outer terminals of BJ3.

6) Check to see that ohmmeter reads 0 when INTENSITY control is turned fully in one direction and reads 100 kilohms when the control is turned fully in the opposite direction.

7) Remove ohmmeter lead from first outer terminal of BJ3 (as attached in step 5) and attach lead to second outer terminal. Check for 0 ohms and 100 kilohms again at opposite extremes of INTENSITY control rotation.

8) If either check in step 6 or 7 fails, replace INTENSITY control.

To replace INTENSITY control, do the following:

9) Test new control per steps 5 through 7 of this procedure to ensure that new control is OK.

10) Pull knob off front of control to gain access to hex retaining nut on front side of terminal.

11) Remove retaining nut using 1/2-inch socket.

12) Withdraw old control from rear side of front panel.

13) Insert new control in front panel, secure with retaining nut, and slide knob on front of control.

14) Move cable BJ3 from rear of control to proper position in chassis and reconnect BJ3 to BP3 cable that goes to monitor assembly.

15) Turn on terminal power per procedure CRT1.

16) Wait 30 seconds for terminal to warm up and then adjust INTENSITY control for proper viewing.

17) Replace cabinet hood per procedure CRT5 and return the DDLTs for directions.

Procedure CRT12 – Replacing Monitor PC Board

To remove the monitor PC board, do the following:

1) Turn off power per procedure CRT2 and remove ac plug from outlet.

2) Disconnect connector BP1 (see figure CRT21).

3) Disconnect ground wire BP7 from BJ7 on monitor board.

4) Disconnect crt lead BP6 from location BJ6 and disconnect ground wire BP8 from location BJ8.

5) Disconnect connector BP4 (see figure CRT21).

CAUTION

To avoid breaking the plastic retainer clips, be careful when compressing the clips to remove the PC board. Make sure that all four clips are compressed before attempting to lift PC board off of chassis. If board is not free of all four clips, either the clips or the PC board may break when attempting to remove the board.

6) To remove PC board from four plastic mounting pegs, carefully compress retainer clip on peg, and at same time, lift that portion of the board near peg gently until board moves up over retainer clip; then stop lifting (see figures CRT21 and CRT22). Do the same for all four clips and pegs. When board is free of all clips, lift board up and off of pegs.

7) Install new PC board by positioning board over mounting pegs to match holes in board with pegs, and then gently press the board down on pegs until board slides over retainer clips on pegs and is securely in place. If any difficulty is encountered as board goes over clips, gently press board down over one clip at a time until it is secure.

8) Replace connectors BP1, BP4, BP6 and ground wires BP7 and BP8 per figure CRT21.

9) Refer to procedure CRT10 if required to adjust monitor for proper video display.

Procedure CRT13 – Replacing High-Voltage Transformer

To remove the high-voltage transformer, do the following:

1) Turn power off per procedure CRT2 and disconnect ac line cord.

WARNING

Be careful not to nick or scratch surface of cathode-ray tube when discharging tube. Nicks and scratches weaken the glass and can cause tube to implode with tremendous force. Wear safety goggles and protective gloves when handling or working on the crt.

2) Connect a heavily insulated wire to ground, then carefully slide other end of wire under rubber anode cover on top of crt. It may be necessary to raise anode cover slightly to start wire under it. Slide wire far enough under cover to discharge tube.

3) Remove high-voltage lead by raising rubber cover and compressing spring-loaded anode lead; then remove high-voltage lead from paper insulator attached to standoff on monitor chassis.

4) Remove transformer primary wires from connector BP4 by removing BP4 and inserting end of paper clip into top of connector to release flag-terminal spring; withdraw flag terminal from bottom of BP4.

5) Remove screw attaching high-voltage lead insulator to hexagonal stand-off and remove insulator. Remove standoff, and then nut and washers from screw securing transformer to monitor chassis. Remove transformer from monitor chassis (see figure CRT23).

To replace the high-voltage transformer, do the following:

6) Connect transformer to chassis as shown in figure CRT23.

7) Connect high-voltage lead through paper isulator and to anode hole in crt; then slide rubber anode cover into position over anode lead and hole. If compressing anode lead spring is difficult, use a pliers with tape- or tubing-covered jaws to compress spring while anode lead is inserted in crt hole.

8) Connect flag-type terminals on primary wires to BP4 by inserting them into bottom of BP4 connector (see figure CRT23 for proper connections).

9) Replace connector BP4 on monitor PC board.

Procedure CRT14 – Replacing the Vertical Choke

To replace the vertical choke on the monitor chassis, do the following:

1) Turn power off per procedure CRT2 and unplug the terminal line cord.

2) Disconnect BP4 (largest connector at rear of monitor PC board). Wires from BP4, pins 6 and 7 go to the vertical choke (see figure CRT5).

3) Remove flag terminals from BP4-6 and BP4-7 by inserting small end of paper clip in space between flag terminal and insulation at top of connector. This compresses wedge-shaped spring clip on terminal so that it can be withdrawn from bottom of connector.

4) Remove nuts from two screws holding choke to monitor chassis, and then lift grounding wire off of rear screw, but do not remove wire from PC board connector.

5) Lift vertical choke up and off mounting screws.

6) Position new choke on monitor chassis so that wires from choke are toward monitor PC board.

7) Place ground wire removed in step 4 on rear mounting screw and secure ground wire and choke to chassis by replacing and tightening nuts removed in step 4.

8) Push flag terminals removed in step 3 into connectors BP4-6 and BP4-7 by pushing them up into connector from bottom until they lock in place. Arrange the choke wires so that they are not twisted or crossed over before inserting them.

9) Reconnect BP4 to rear of monitor PC board.

10) Go to procedure CRT10 and check for any required video adjustments.

Procedure CRT15 – Check/Replace CRT Cap

To check the crt cap, do the following:

1) Turn off power per procedure CRT2 and unplug ac line cord from outlet.
2) Remove terminal cabinet hood per procedure CRT5.
3) Disconnect connector BP4 (large connector) from rear of monitor PC board.
4) Disconnect connectors BP6/BJ6 and BP8/BJ8 from monitor PC board (see figure CRT21).
5) Carefully remove crt cap from rear of crt neck (see figure CRT24).
6) Using an ohmmeter, make continuity checks between the following BP4 connector pins and crt cap sockets:

BP4 Pin Number	CRT Cap Socket Number
1	7
2	1
4	6
15	4
20	3

7) Using an ohmmeter, make a continuity check between BP6 wire (black wire) and crt cap socket 2. All checks in steps 6 and 7 should indicate continuity (0 ohms); if not, cap requires replacement.

To remove the crt cap, do the following:

8) Do steps 1 through 5 preceding.
9) Remove flag terminals from BP4 as indicated in the BP4 pin number list of step 6 preceding. Do this by inserting small end of paper clip into top of BP4 connector to release wedge-shaped spring clip on flag terminal, and then withdrawing flag terminal from bottom of connector.

To install the crt cap, do the following:

10) Insert wires coming from crt cap into connector BP4 as per listings in step 6 preceding. To install flag terminals in BP4, push them into bottom of BP4 connector until they lock in place.
11) Connect black wire coming from crt cap socket 2 to BJ6 on monitor PC board, and then connect green wire attached to black wire to BJ8 on monitor PC board (see figure CRT21).
12) Align keyslot in crt cap with keyguide on rear of crt, and then carefully push cap onto guide and crt pins until cap is seated on rear of crt.

Procedure CRT16 – Replacing Monitor CRT

To remove the monitor crt, perform the following:

1) Turn off power per procedure CRT2 and remove ac power cord from outlet.
2) Remove terminal cabinet hood per procedure CRT5.
3) Refer to procedure CRT13 and discharge/disconnect high-voltage lead per step 2.
4) Remove monitor module from cabinet per procedure CRT18.
5) Pull crt cap carefully from end of crt neck (see figure CRT24). Do not remove the vinyl keyguide, which helps to protect end of tube when crt cap is removed. During installation, keyguide also ensures that cap goes on end of new tube properly.
6) Disconnect crt ground clip assembly from E1 on monitor chassis.

WARNING

Use extreme care when working around crt because rough handling, nicks or scratches, or undue pressure on neck can cause crt to implode. This in turn can present a serious hazard from flying glass to personnel working in the area.

7) Loosen clamps on yoke and ring-magnet assembly on neck of tube (figure CRT25).
8) Remove crt ground clip from underneath shielding sleeve. Slide ring-magnet assembly back and off end of crt neck. Gently slide yoke and shielding sleeve (between neck and yoke) back on crt neck to ensure that it is loose enough for later removal.
9) Remove four screws holding crt mounting plate to monitor chassis at front; be careful that crt does not slip and fall as these screws are removed. Also remove static discharge spring as these screws are removed (see figure CRT26).

WARNING

Never allow weight of crt to rest only on neck of tube while front of tube is unsupported.

10) Support crt neck with one hand and carefully remove yoke and shielding sleeve with other hand.

11) Withdraw crt carefully from wire chassis of monitor module. Place crt facedown on stable, flat surface that has been covered with a clean, soft cloth.

12) Remove replacement crt from shipping carton and place facedown on stable, flat surface that has been covered with a clean, soft cloth. Then place old tube in empty shipping carton.

To install crt in monitor assembly, do the following:

13) Being careful not to let weight of crt rest on neck, pass crt neck through front of monitor chassis until neck is back in area of yoke and front mounting plate can be fastened to chassis struts.

14) Install front mounting plate and static discharge spring on front of monitor chassis and over front of crt screen (see figure CRT26). Secure plate and spring with four screws and nuts removed in step 9.

15) Position shielding sleeve on neck with one hand and slip yoke over neck and sleeve. Slide yoke forward into position (see figure CRT25). Sleeve should extend out from back of yoke as yoke moves up against flare at rear of tube (see figure CRT27).

16) Slip clamp over back tabs of yoke and tighten screws slightly until yoke remains in place, but can still be moved easily.

17) Slide ring-magnet assembly over shielding sleeve until it contacts rear of yoke assembly.

18) Slip crt ground clip under shielding sleeve (figure CRT27). It may be necessary to loosen yoke clamp slightly to get ground clip into position. Once ground clip is in position, tighten both yoke and ring-magnet clamp slightly to hold entire assembly in position.

19) Ensure that keyguide is in place over pins at rear of crt (see figure CRT24).

20) Carefully position tube cap over end of crt and gently push cap onto pins, ensuring that slot in cap aligns with keyguide.

21) Install monitor assembly in cabinet per procedure CRT18.

22) Install high-voltage lead into anode hole on crt; refer to step 7 of procedure CRT13 if necessary.

23) Reconnect crt ground clip assembly to E1 on monitor chassis.

24) Ensure that connectors BP1 and BP4 are securely connected at rear of monitor PC board, and visually inspect installation to make certain that all other wires are properly connected.

25) Perform monitor adjustment procedures per procedure CRT10 if necessary.

Procedure CRT17 – Replacing CRT Yoke

To remove the yoke assembly from crt neck, do the following:

1) Turn off terminal power per procedure CRT2 and remove ac line cord from site outlet.
2) Remove cabinet hood per procedure CRT5.

WARNING

Use extreme care when working around crt because rough handling, nicks or scratches, or undue pressure on neck can cause crt to implode. This in turn can present a serious hazard from flying glass to personnel working in the area.

3) Connect heavily insulated wire to ground and, while carefully lifting rubber cover, discharge crt anode by sliding other end of grounded wire under cover and into anode hole in crt.
4) Disconnect ground clip ring lug from E1 on monitor chassis.
5) Pull connector BP4 off rear edge of monitor PC board. BP4 is largest of PC board connectors and has wires leading from it to yoke assembly.
6) Disconnect flag terminals 9, 10, 18, and 19 from BP4 connector; these are four wires leading from yoke to BP4. To do this insert small end of paper clip into top of connector in space between flag terminal and insulation and pull gently on wire until wedge-shaped, spring clip comes out bottom of connector. The paper clip must compress the spring clip enough to withdraw it from connector.
7) Pull crt tube cap carefully off end of crt (see figure CRT24). Do not remove the vinyl keyguide from end of tube.
8) Loosen clamp screws for ring-magnet and yoke clamps (see figure CRT25).
9) Remove ground clip from under shielding sleeve. Gently slide shielding sleeve, ring-magnet and yoke assemblies back and off neck of crt.

To install yoke, do the following:

10) Position shielding sleeve approximately as shown in figure CRT27, but with opening straight down and aligned with pin 7 of crt tube, and then slide sleeve up onto neck of crt.
11) Position yoke with wires hanging downward (red and green wires to left and blue and yellow wires to right from rear), and then slide yoke onto neck of crt over shielding sleeve.

WARNING

Never tighten yoke or ring-magnet clamps more than enough to hold yoke and ring magnet in place on crt neck. If clamps are tightened too much, it is possible to break neck of crt, which could result in serious injury to any persons in the area.

12) Move yoke clamp onto neck and over end tabs of yoke; tighten clamp just enough to hold yoke in place, but not enough to prevent moving the yoke on the neck of crt.

13) Place ring-magnet assembly on neck and slide it forward until it butts against rear of yoke.

14) Slip crt ground clip under shielding sleeve and slide clip forward until rear of clip is past rear of crt tube (it may be necessary to loosen yoke clamp to do this).

15) Tighten yoke clamp and ring-magnet clamp just enough to hold yoke and ring magnet in position.

16) Position crt cap at rear of crt tube so that keyslot in cap aligns with keyguide on neck. Press cap carefully onto pins of crt tube until cap seats.

17) Insert flag terminals into connector BP4 (larger of two connectors at rear of monitor PC board). Push terminals in from bottom side of BP4 until spring clips secure them in place.

    a) Push green wire from yoke into BP4-9

    b) Push yellow wire from yoke into BP4-10

    c) Push red wire from yoke into BP4-18

    d) Push blue wire from yoke into BP4-19

18) Connect BP4 to rear edge of monitor PC board and connect ground-clip ring lug to E1 on monitor chassis.

19) Ensure that rear panel circuit breaker CB1 is off (down) and then plug terminal line cord into appropriate ac outlet.

20) Go to Video Monitor Adjustments procedure (CRT10) and perform required adjustments.

Procedure CRT 18 – Replacing Video Monitor Assembly

To remove the video monitor assembly, perform the following:

1) Turn off power per procedure CRT2 and remove ac power cord from outlet.
2) Remove connector BP1 from rear of monitor PC board (figure CRT21).
3) Disconnect flag terminal 14 from BP1 by inserting small end of paper clip into top of connector in space available between flag terminal and insulation and then pulling wire gently out from bottom of connector. Flag terminals have small wedge-shaped spring clips on end that must be compressed to remove terminals from connector.
4) Disconnect connectors BP2 and BP3 (figure CRT20).
5) Disconnect all ground wires from post E1 on monitor chassis.
6) Loosen bottom two screws holding monitor chassis assembly to bezel. Remove upper two screws and two screws holding monitor chassis to display module chassis at rear (see figure CRT28).

WARNING

Use extreme care when handling the video monitor assembly because rough handling can cause the crt to implode with tremendous force. This could result in serious injury. Do not nick or scratch crt glass or subject it to any undue pressure during replacement. When handling crt, always wear safety goggles and heavy gloves for protection.

7) Grasp monitor assembly by mounting frames with both hands and carefully lift assembly up and out of display module chassis (see figure CRT28). As this is done, check that no cabling is caught or remains connected to video monitor assembly. Place monitor on a secure, stable surface.

To install video module, perform the following:

8) Verify left-bottom and right-bottom screws in bezel are partially screwed in so as to receive slots on lower-front monitor chassis struts (refer to figure CRT28).
9) Pick up monitor module by wire chassis struts and carefully lower it into display module cabinet until slots in lower-front struts slip over screws in bezel.

10) Steady monitor module with one hand while positioning one of rear support struts over post in cabinet base, and then start a screw into the post to hold monitor chassis in place.

11) Insert three remaining screws that hold monitor chassis to cabinet base and to bezel of display module cabinet. Tighten four screws that hold monitor assembly to bezel first and two screws that hold monitor assembly to cabinet base last. Do not overtighten any of these screws; just ensure that they are securely snugged down.

12) Reconnect all connectors and wires removed in steps 2 through 5 of this procedure. If monitor assembly is a replacement, it will require adjustment; refer to procedure CRT10.

Procedure CRT19 – Check/Replace Audible Alarm

To check the alarm, do the following:

1) Turn power off per procedure CRT2 and unplug ac power cord from outlet.

2) Remove terminal cabinet hood per procedure CRT5.

3) Locate alarm near bottom center of control logic PC board chassis (see figure CRT29).

4) Set ohmmeter to measure resistance on RX1 scale.

5) Touch positive (+) meter probe to terminal marked + on the alarm. Touch negative (-) meter probe to remaining alarm terminal.

6) If alarm sounds as probes are touched to terminals, alarm is OK; if it does not sound, replace it.

To remove alarm, do the following:

7) Remove logic PC board assembly from cabinet chassis per procedure CRT20.

8) Remove faulty alarm from logic chassis by holding alarm with one hand and then using pliers to rasp or break off retaining teeth that hold alarm in chassis. When alarm is free of chassis, remove and discard alarm.

To install alarm, do the following:

9) Test new alarm per steps 4 through 6 preceding.

10) Snap new alarm into logic chassis from rear side.

11) Replace logic PC board assembly in cabinet chassis per procedure CRT20.

12) Check that switch settings of switches on logic PC board have not been altered during this procedure by checking switch settings against settings marked on decal on logic chassis.

13) Return to DDLTs for further test procedures or directions.

Procedure CRT20 – Replacing Control Logic PC Board

To remove the control logic PC board (figure CRT29), do the following:

1) Turn terminal power off per procedure CRT2 and unplug ac line cord from outlet.
2) Remove cabinet hood per procedure CRT5.
3) Remove chassis ground wires (green) from rear side of logic module chassis by removing hex nut and wires.
4) Remove logic module retaining screw at each lower end of module chassis.
5) Remove support brace nut from module chassis.
6) Lift module up slightly and remove cable connectors AJ1, AJ2, and AP3 (power connector) from near bottom of module.
7) Locate audible alarm near bottom center of control logic PC board chassis, and remove wires leading to alarm terminals: red wire to + terminal on alarm and white wire to other terminal on alarm.
8) Remove entire logic module assembly from cabinet chassis.
9) Remove two screws holding module cover-plate (side with switch-setting decal) and lift cover-plate off module.

NOTE

In performing the following step, do not warp the PC board when removing it from the plastic supports. Doing so may damage the foil paths or components on the PC board, or may even break the PC board itself.

10) Lay the module down with PC board and components facing up, and begin easing the board up around each of the six plastic support posts a little at a time. Continue working around the board and each support post until the board is free. A needle-nose pliers with the jaw ends taped or covered with tubing may be used to compress the posts slightly to facilitate raising the board around each post.

Should one of the support posts break while removing the logic PC board, replace it in the following manner:

11) Use pliers to compress rear side of support post while pulling post out from front side (inside) of logic module chassis plate.

12) Insert new post from front side (inside) of logic module chassis plate, and press in until it locks in place.

To replace control logic PC board, do the following:

13) Position PC board over logic module chassis plate so that holes in board align with support posts on plate, and then lower board onto posts. Work around board pressing it down around each post a little at a time until board is secure on all six support posts.

14) Check switch settings on board to ensure that they are set per the SITE blocks on cover-plate decal (see figure CRT1).

15) Do steps 3 through 9 in reverse order and action to complete installation of logic PC board and return to DDLT for next test or directions.

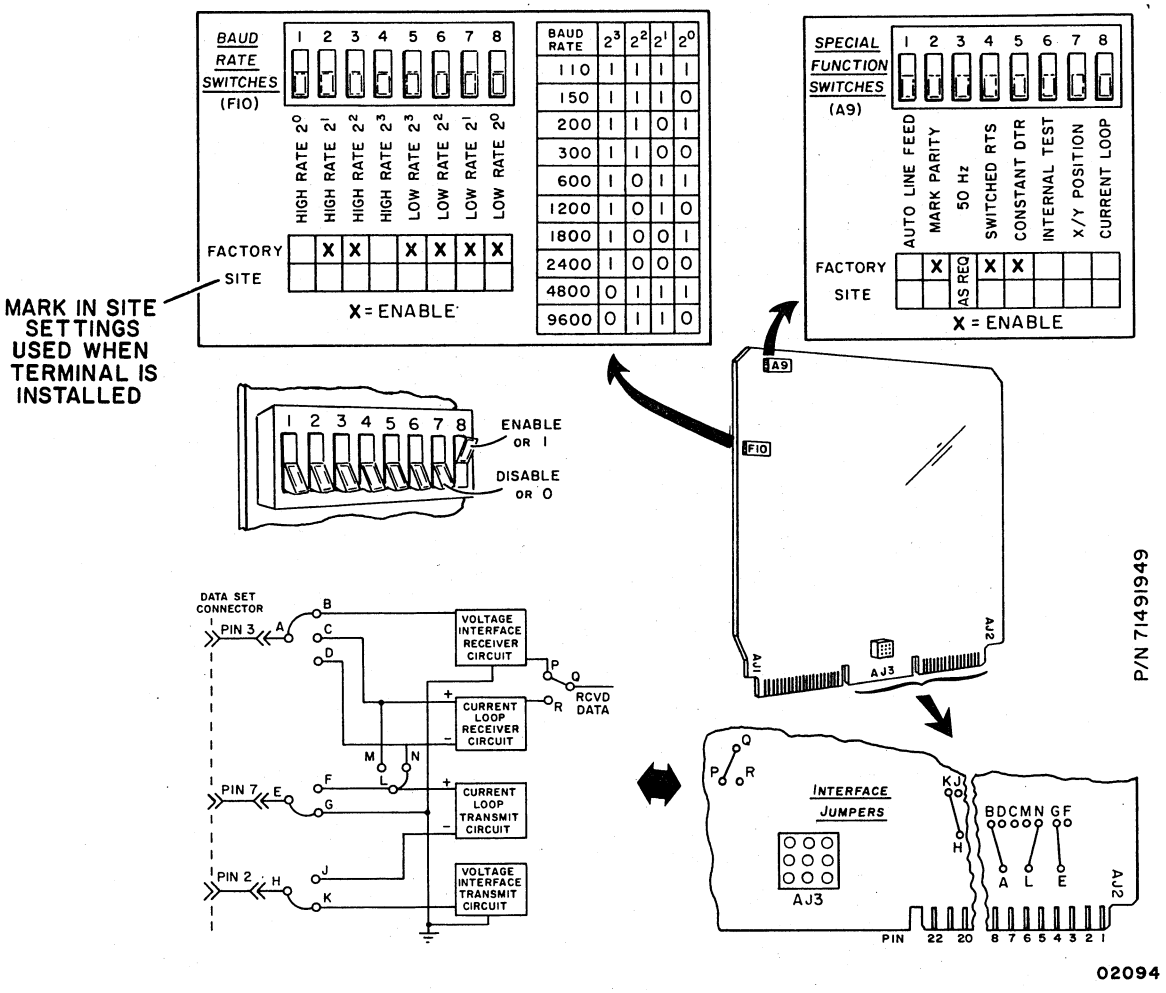

Figure CRT1. Keyboard Display Internal Switches and Controls

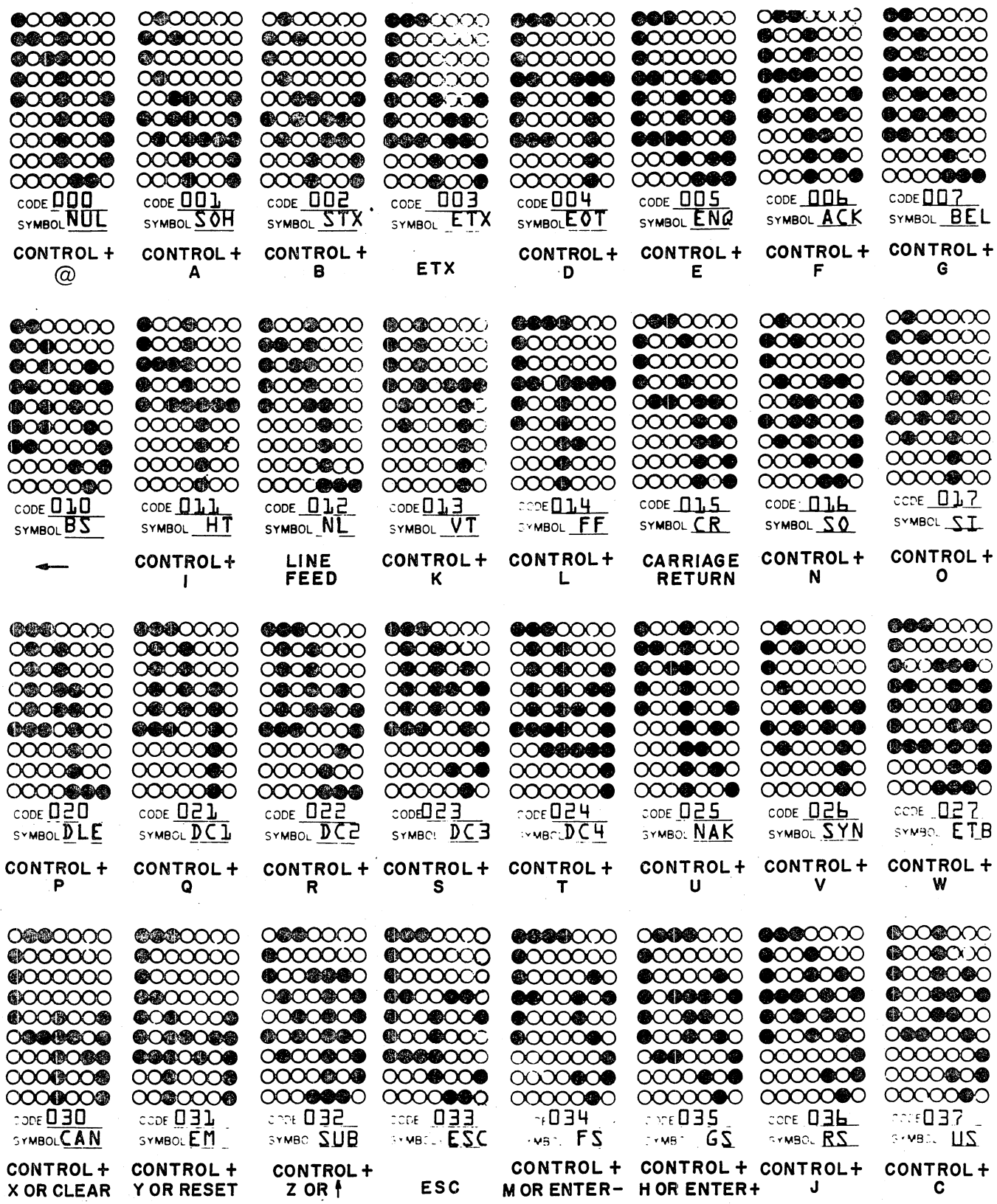

Figure CRT2. Control Code Dot Matrix Formations and Octal Codes* 02004

---

* ASCII delete code (DEL) is listed with alphanumeric code set in appendix (see code 177_8)

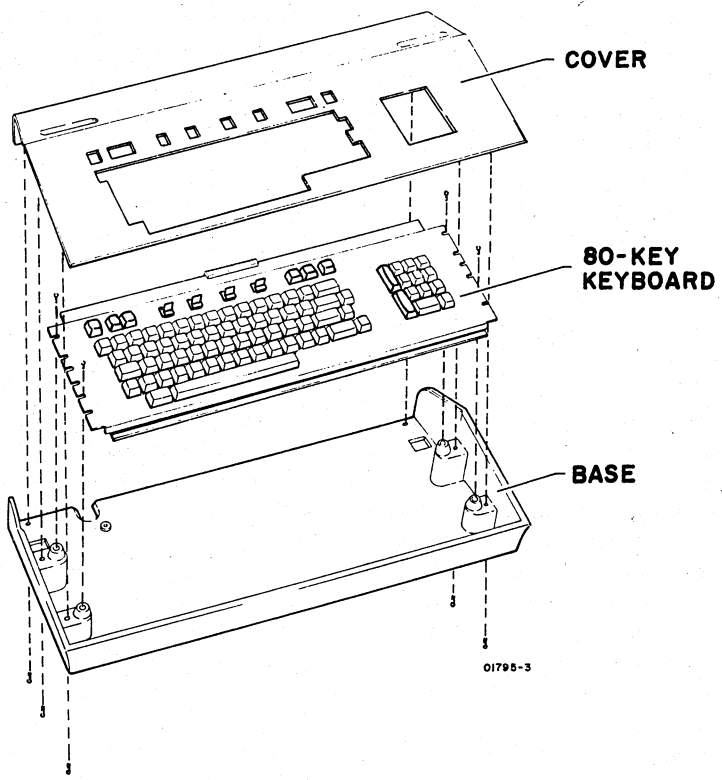

Figure CRT3. Keyboard Module Components

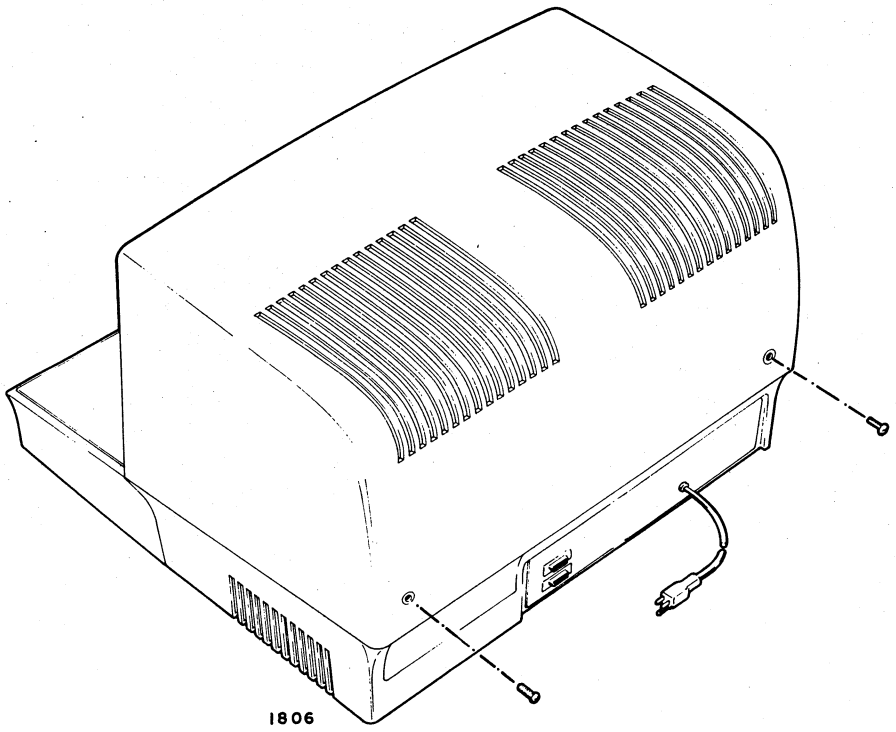

Figure CRT4. Keyboard Display Cabinet Hood Removal

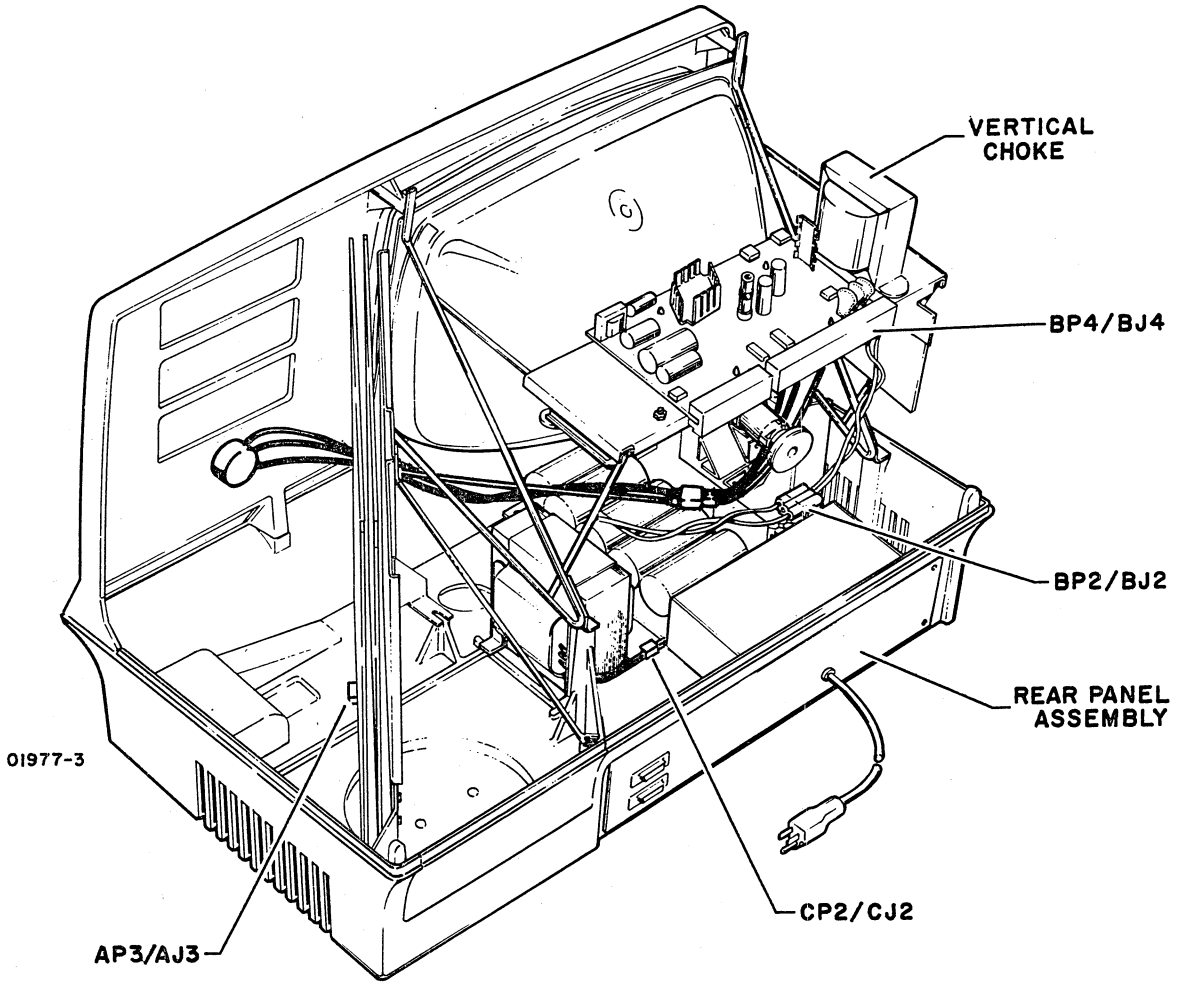

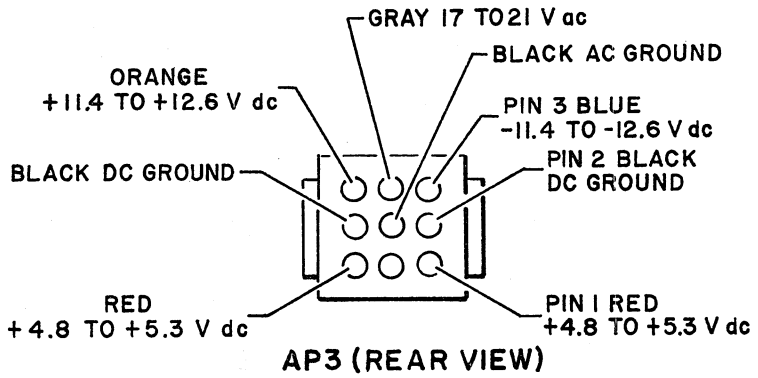

Figure CRT5. CP2/CJ2 and Rear Panel Locations

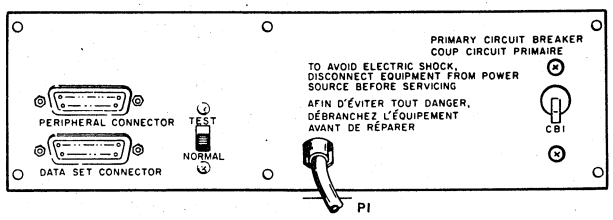

FRONT VIEW

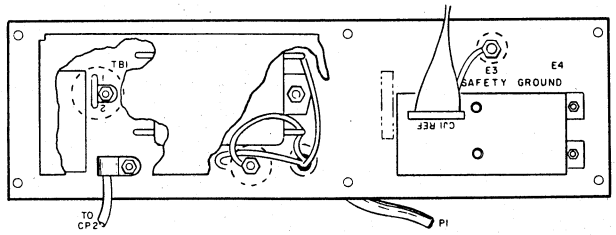

REAR VIEW

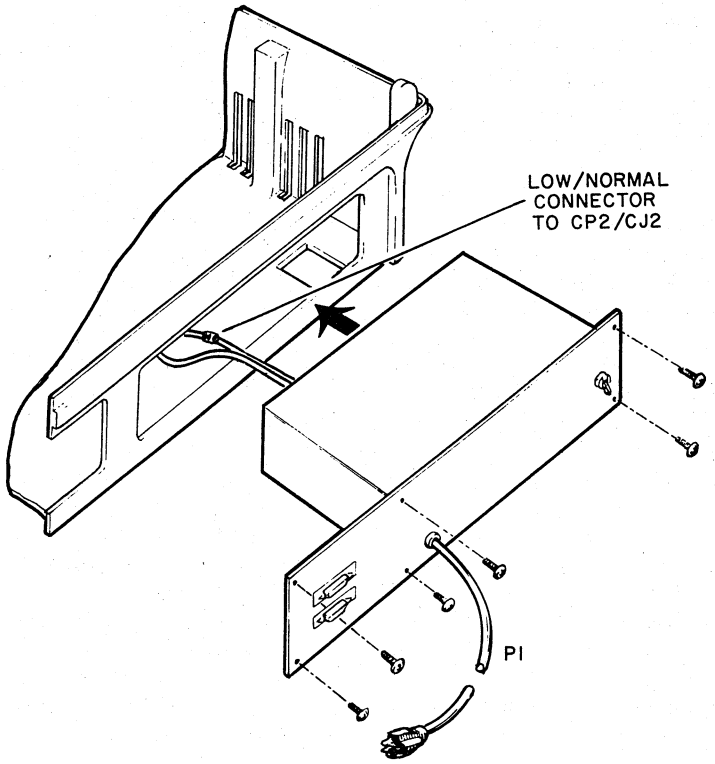

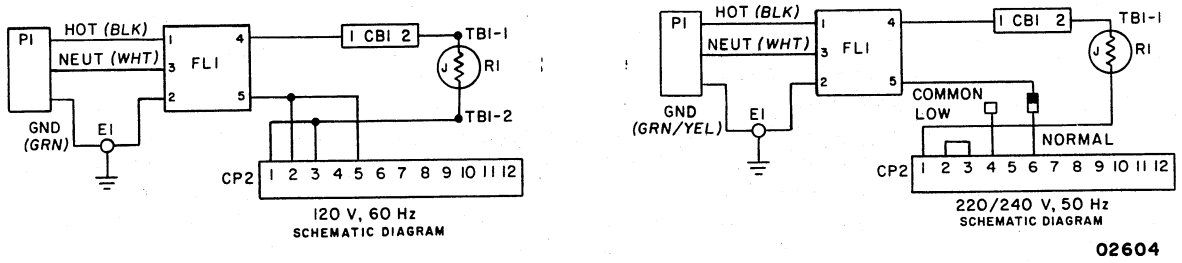

Figure CRT6. Rear Panel Removal and Connections

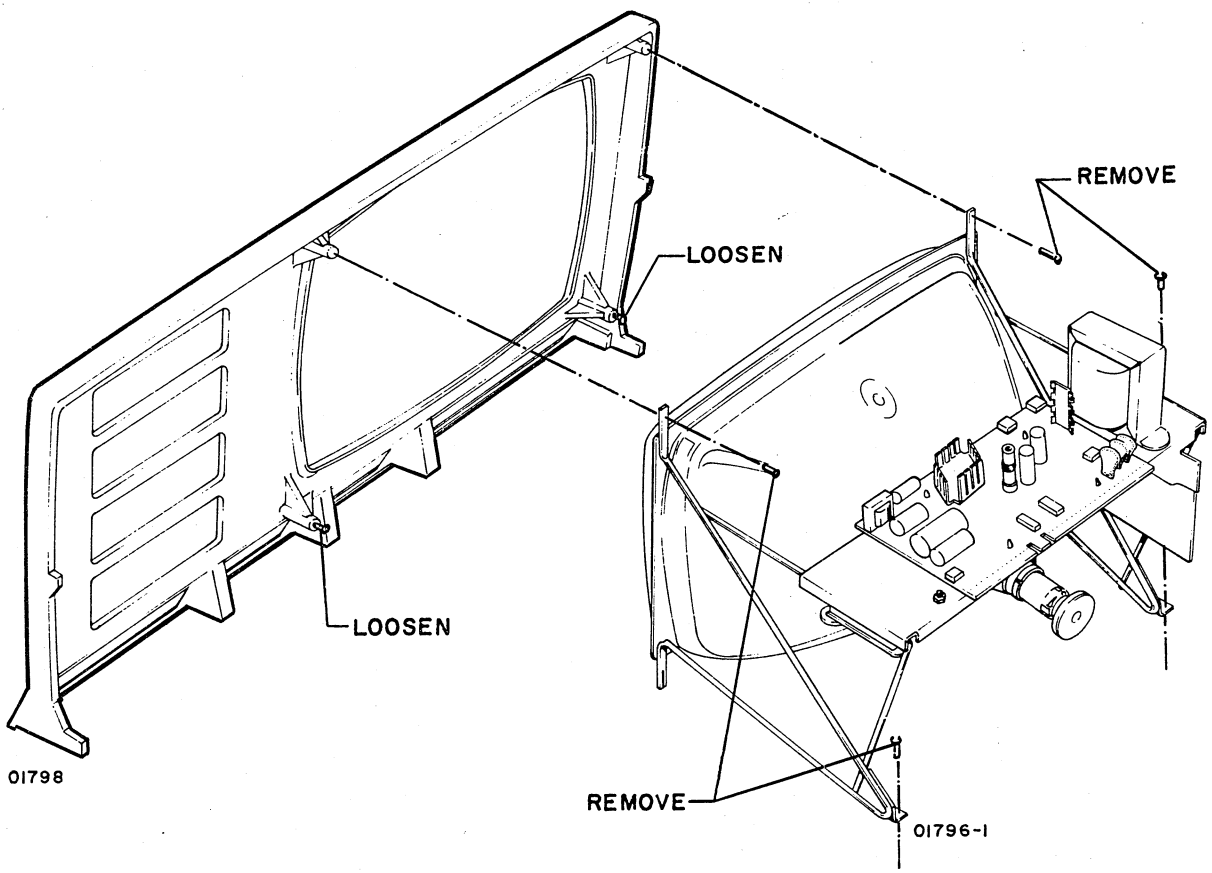

Figure CRT7. Monitor Assembly and Bezel Screw Removal

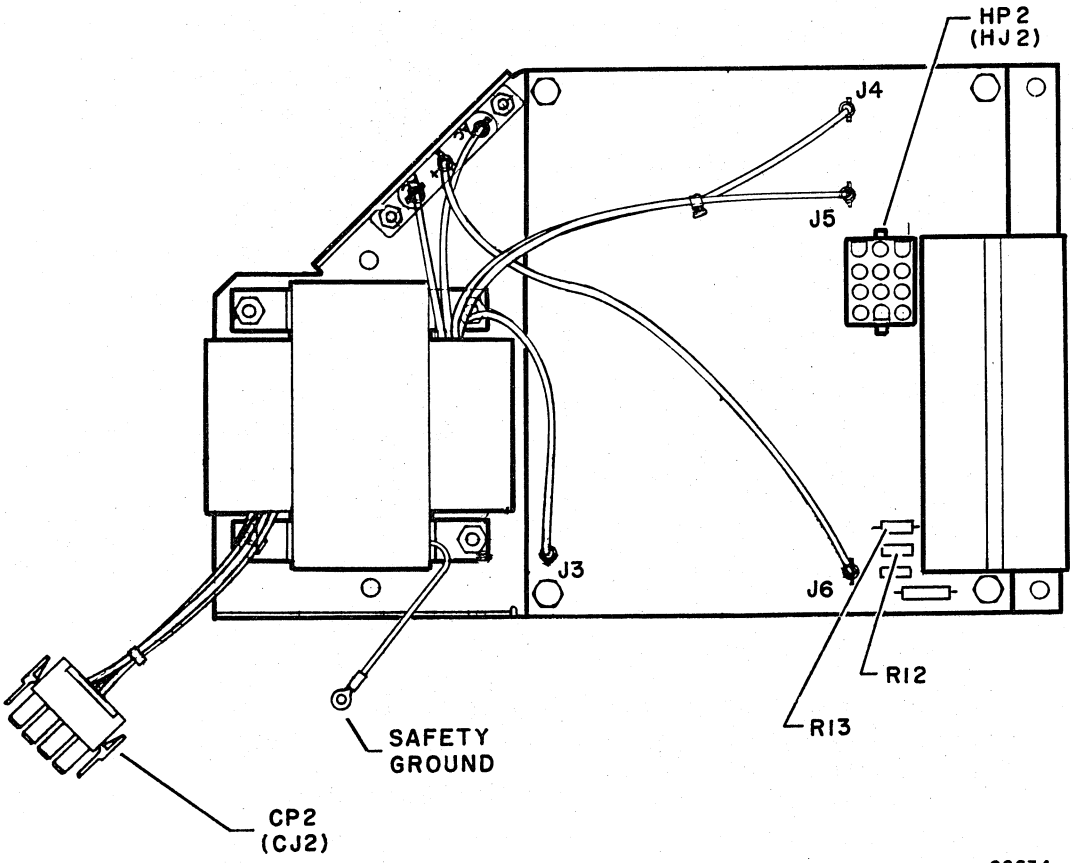

HJ2 Pin No.	Output	Tolerances
1	19 V ac at 0.1 A, maximum	±1.9 V ac
2	Not used	
3	+23 V dc at 1.5 A, maximum	-1.5 to +2.3 V dc
4 through 6	Ground	
7	12 V dc at 0.2 A, maximum	±600 mV dc
8 and 9	Ground	
10	-12 V dc at 0.2 A, maximum	±600 mV dc
11 and 12	+5 V dc at 6.0 A, maximum	±250 mV dc

Nominal Input	Tolerance Range	CJ2 Pin No.
120 V ac	102 to 128 V ac	1 (hot) and 2 (neutral)
220 V ac	198 to 246 V ac	1 (hot) and 4 (neutral)
240 V ac	216 to 268 V ac	1 (hot) and 6 (neutral)

Figure CRT8. Power Supply Module Layout and Input/Output Voltages

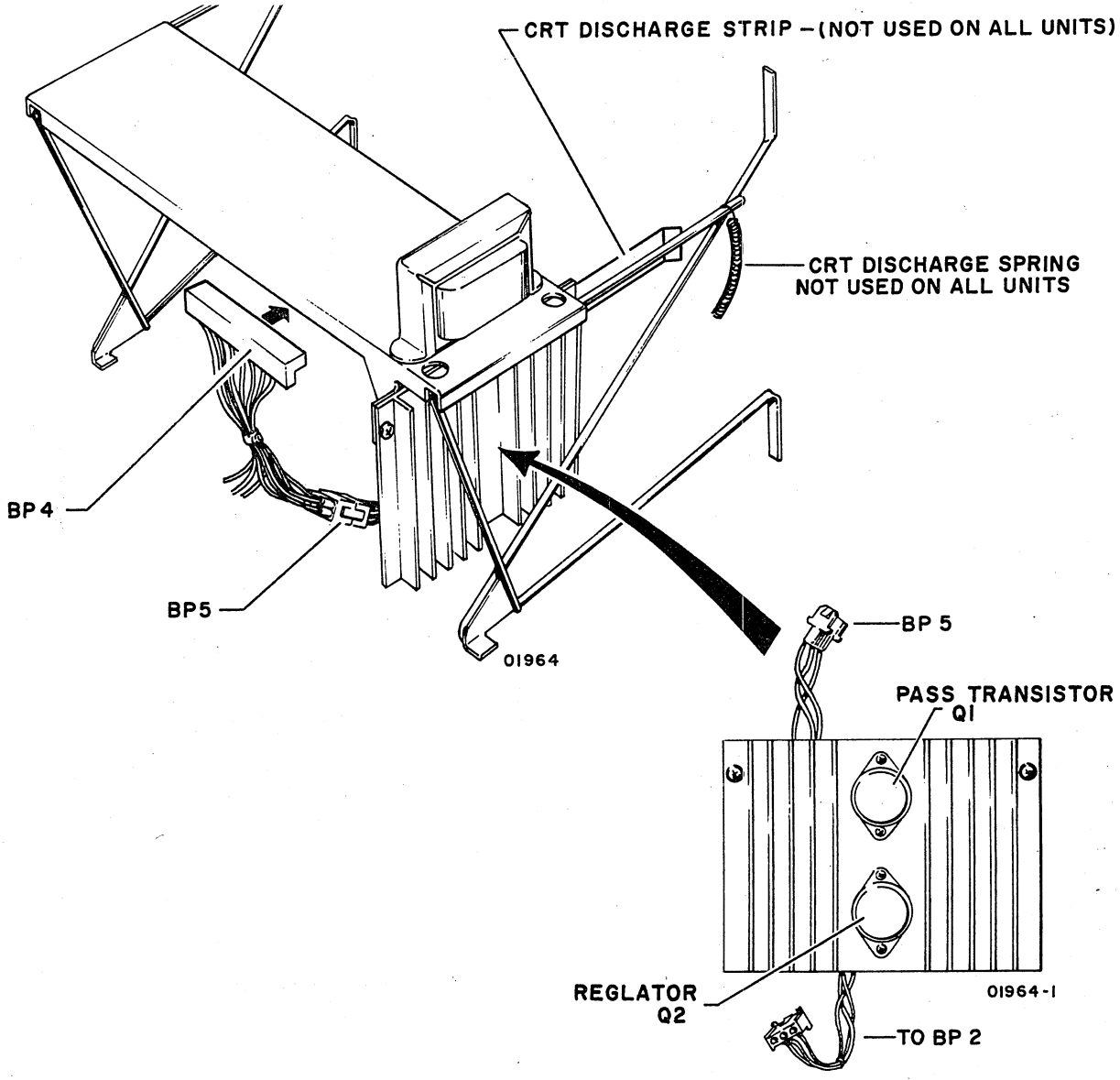

Figure CRT9. +15-V dc Regulator Location

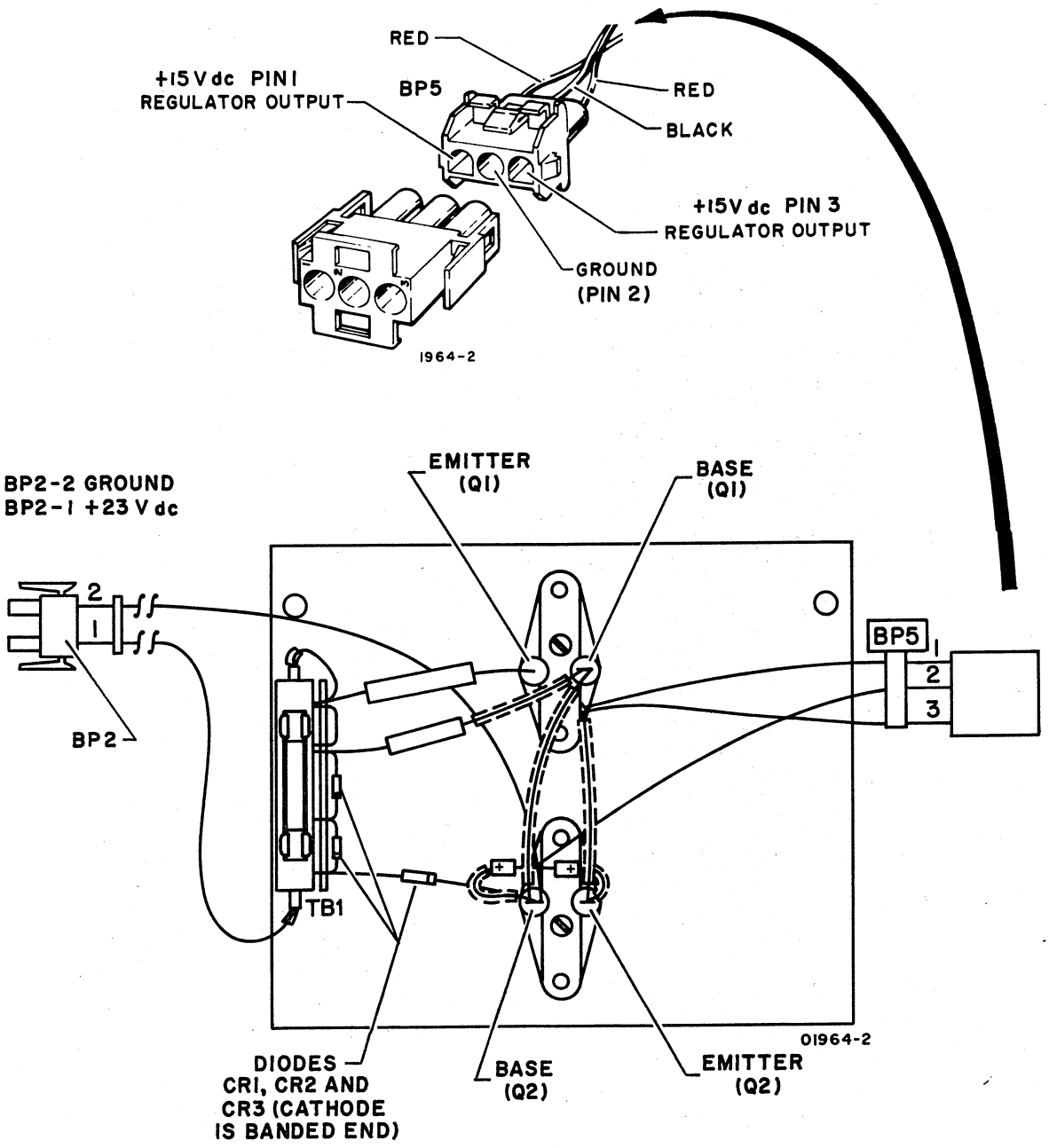

Figure CRT10. +15-V dc Regulator Assembly Detail (Rear View)

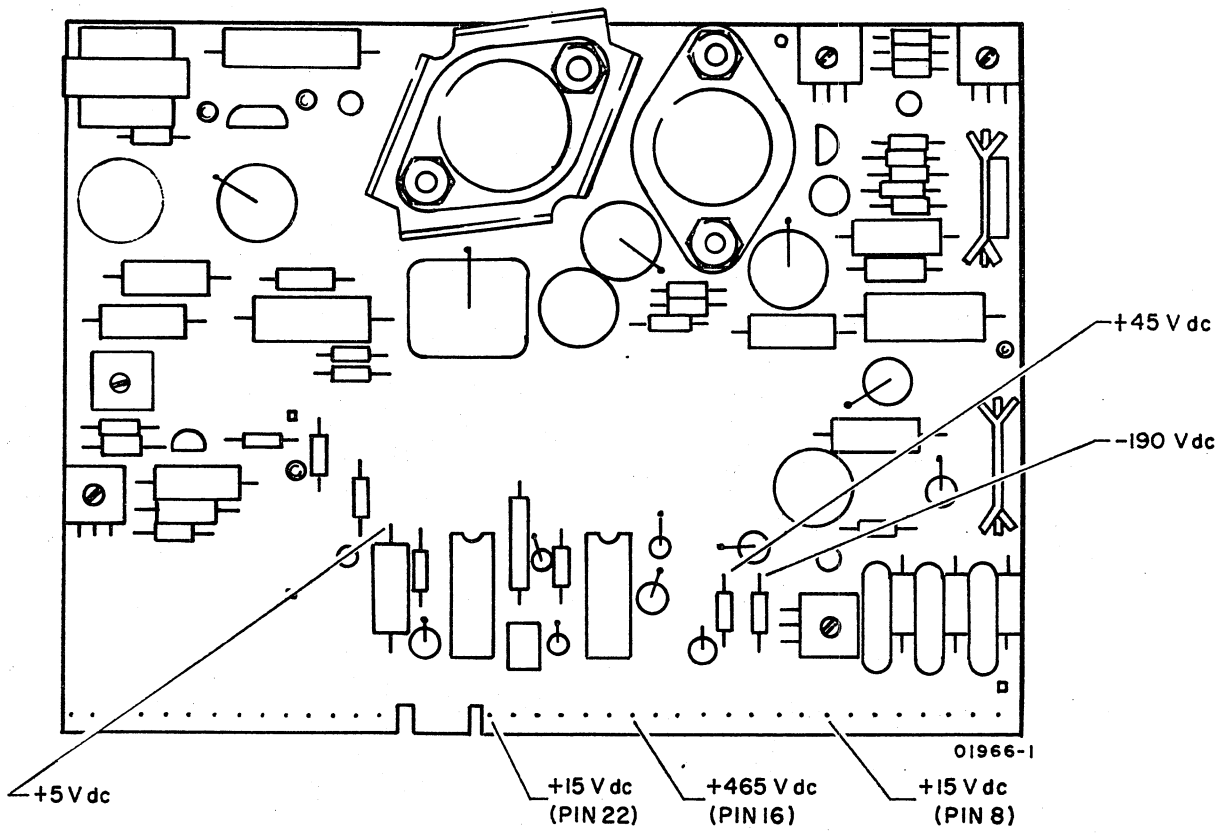

Figure CRT11. Monitor PC Board Voltages

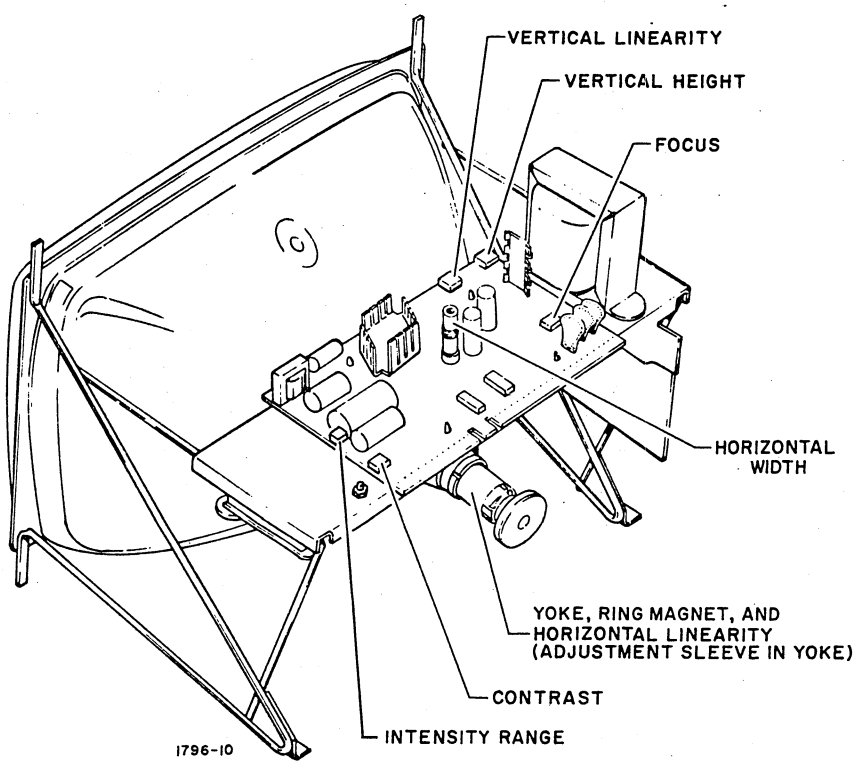

Figure CRT12. Location of Video Monitor Adjustments

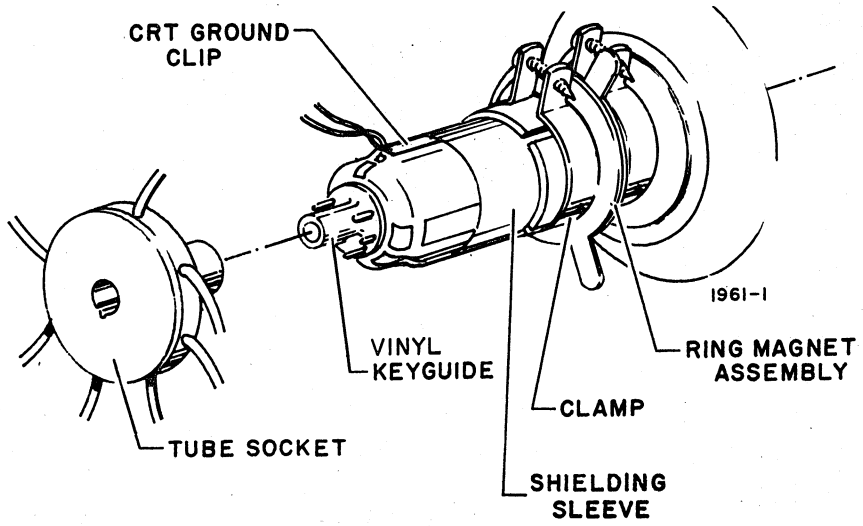

Figure CRT13. Yoke Adjustments

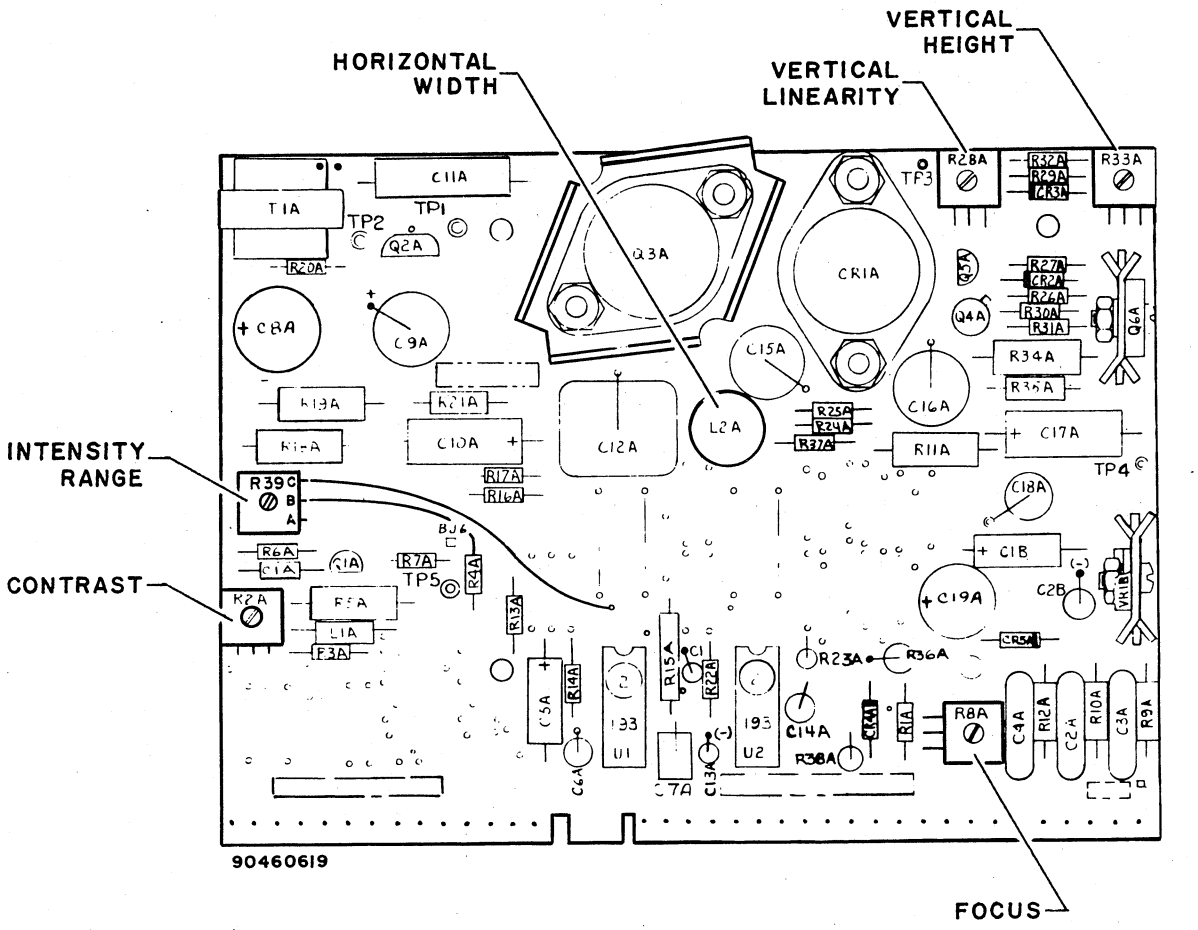

Figure CRT14. Monitor PC Board Adjustments

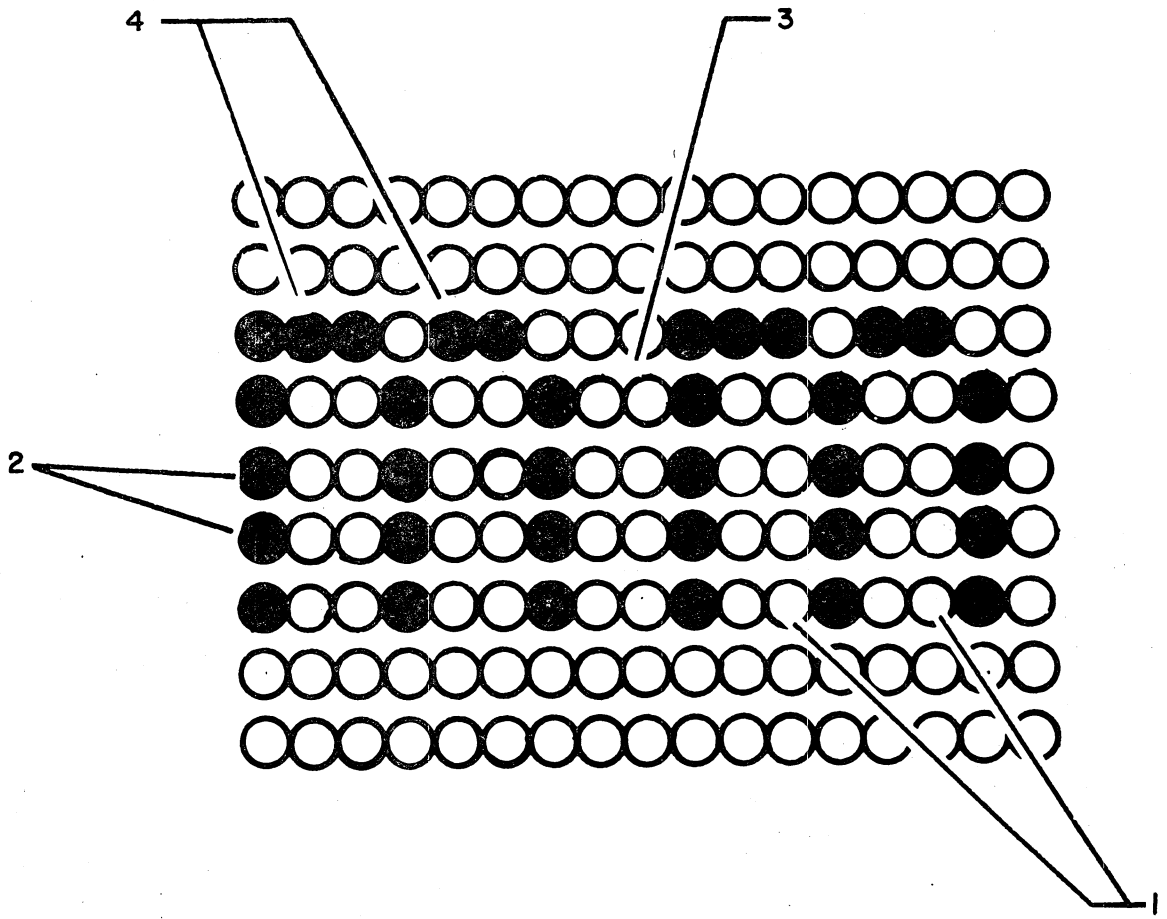

02576-1

NOTE: OBSERVE THE INDICATED POINTS FOR OPTIMUM CHARACTERISTICS OF:
1) DOT SIZE AND SHAPE
2) SPACING BETWEEN VERTICAL STROKES
3) CHARACTER SEPARATION
4) TAILS OR SMEARING

Figure CRT15. Character Resolution

NOTE: THE 8-1/2- BY 11-INCH PLASTIC OVERLAY IS INCLUDED ELSEWHERE IN THIS MANUAL.

02578-I

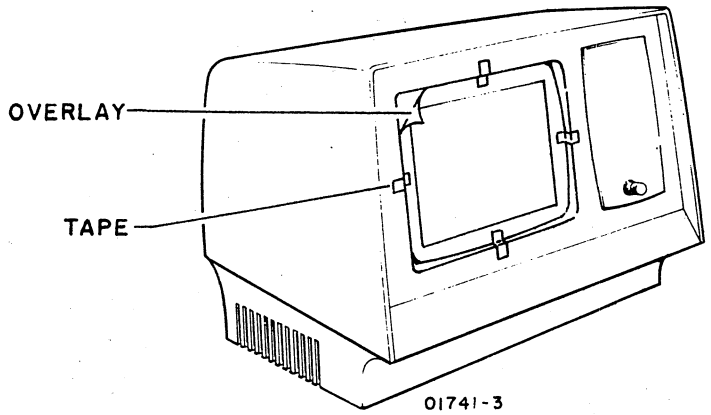

Figure CRT16. Applying Overlay to CRT Screen

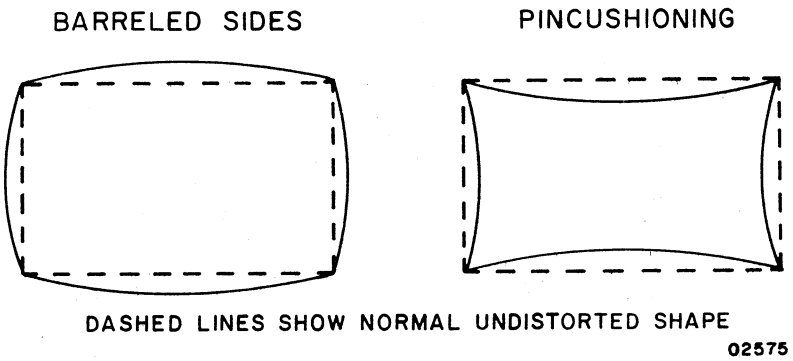

Figure CRT17. Identifying Display Distortion

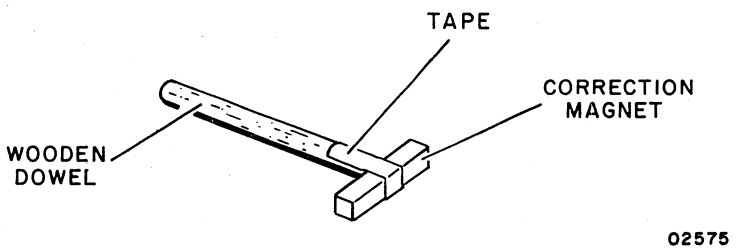

Figure CRT18. Attaching Correction Magnet to Dowel

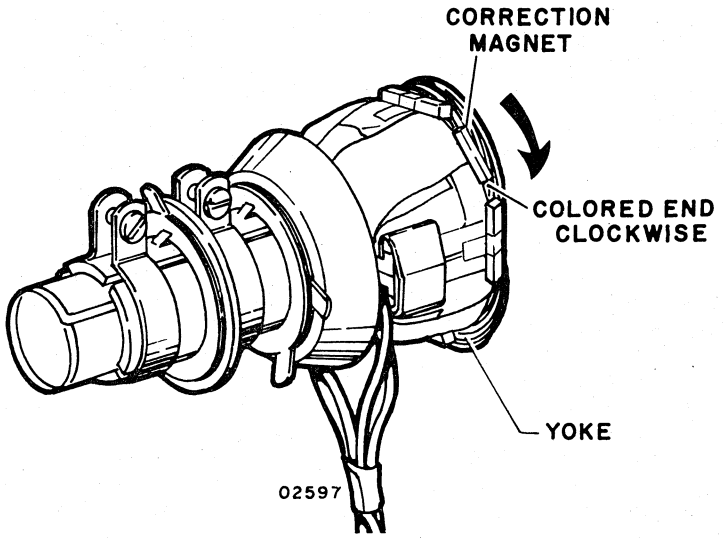

MAGNET ADDED TO YOKE TO CORRECT PINCUSHIONING (SEE NOTE)

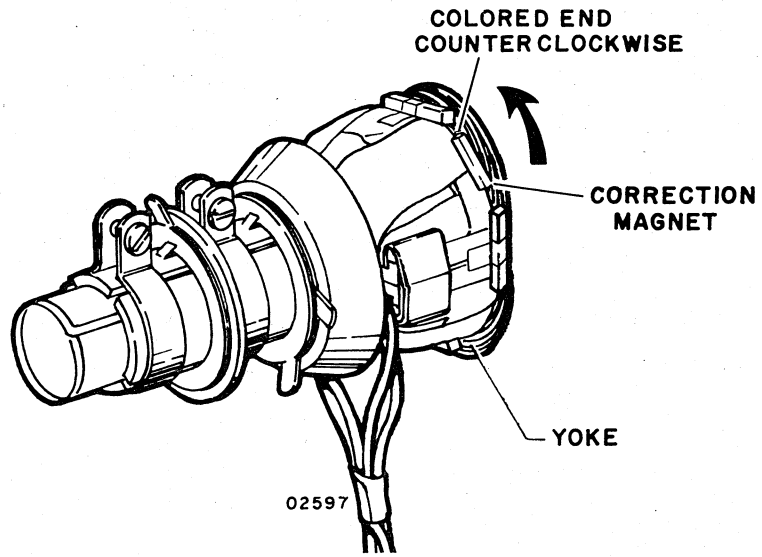

MAGNET ADDED TO YOKE TO CORRECT BARRELING (SEE NOTE)

NOTE: IF BOTH BARREL AND PINCUSHION DISTORTION WERE BEING CORRECTED, THE COLORED END OF THE CORRECTION MAGNETS WOULD BE PLACED ON THEIR RESPECTIVE SIDE OF THE YOKE AND THE RESULT WOULD BE A MIXTURE OF THE TWO EXAMPLES SHOWN.

Figure CRT19. Magnet Placement and Distortion Correction

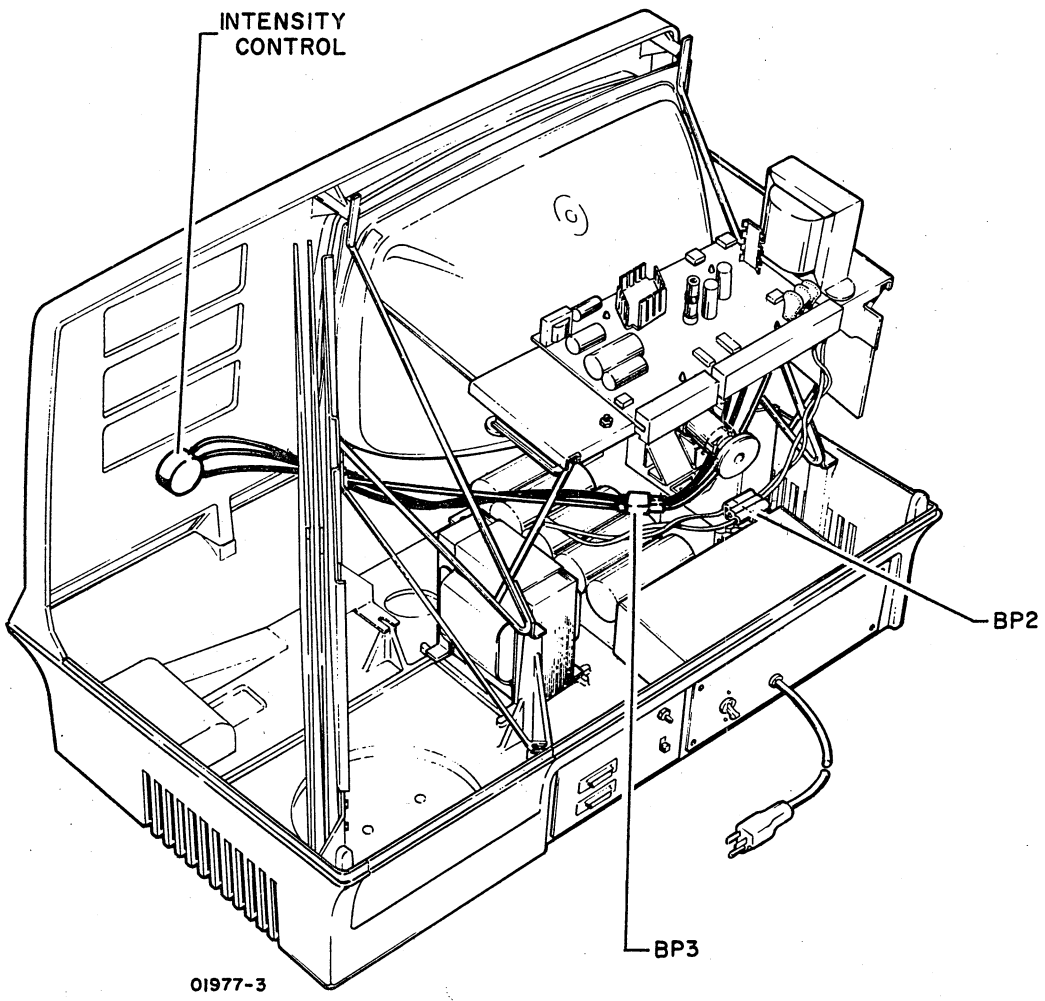

Figure CRT20. Intensity Control Assembly Location

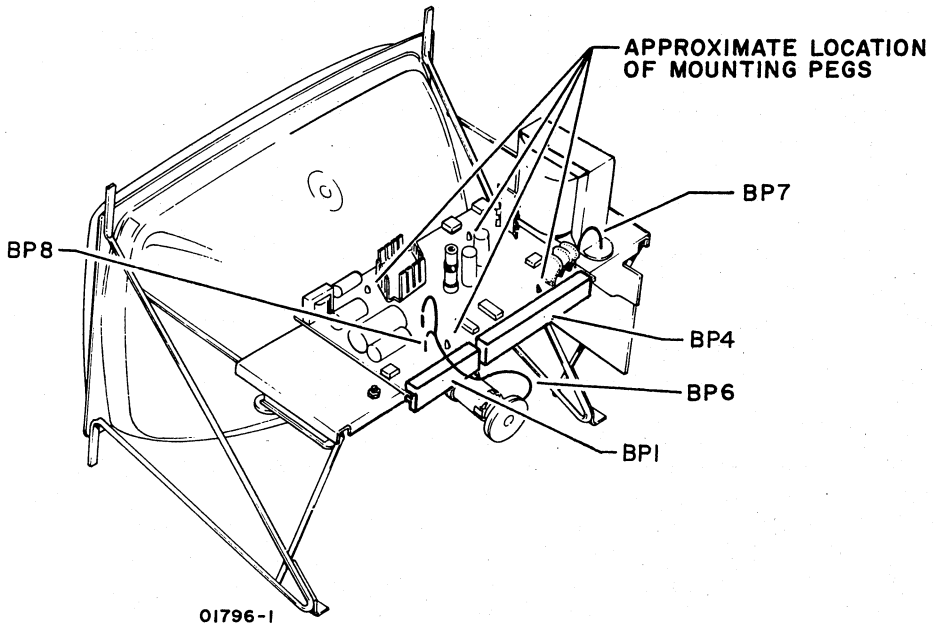

Figure CRT21. Monitor PC Board Connections

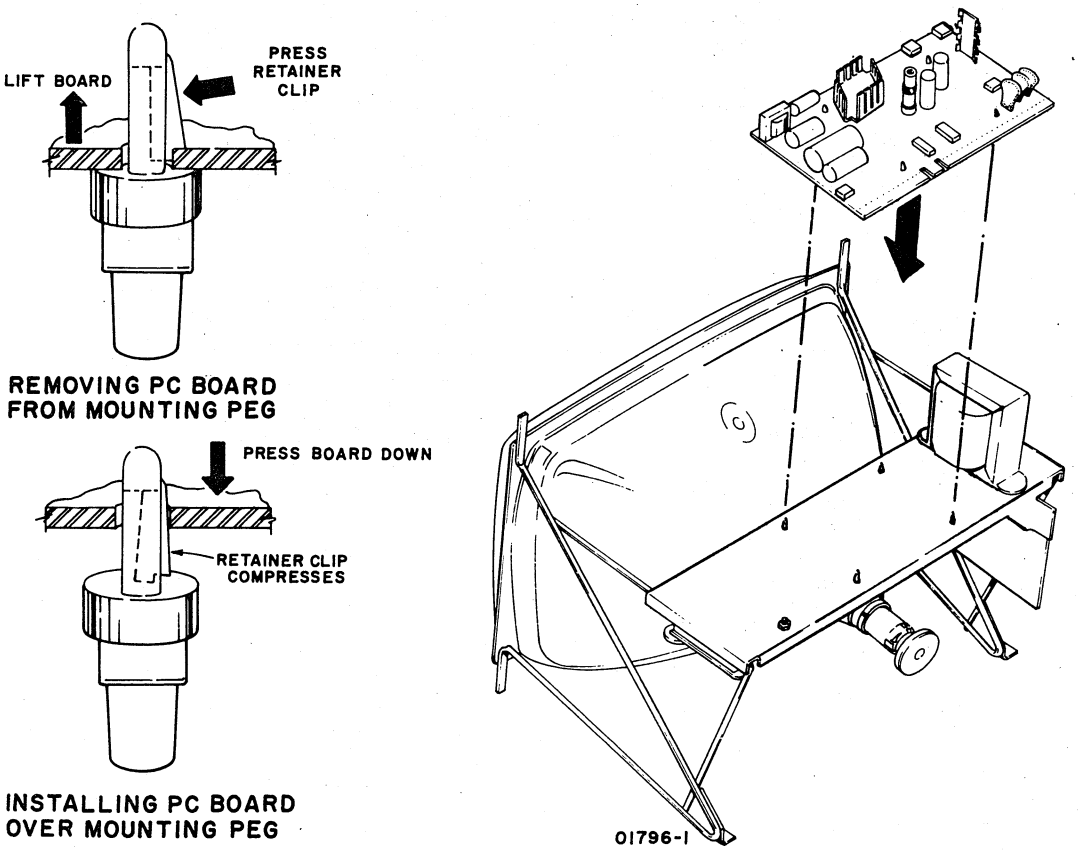

Figure CRT22. Monitor PC Board Placement

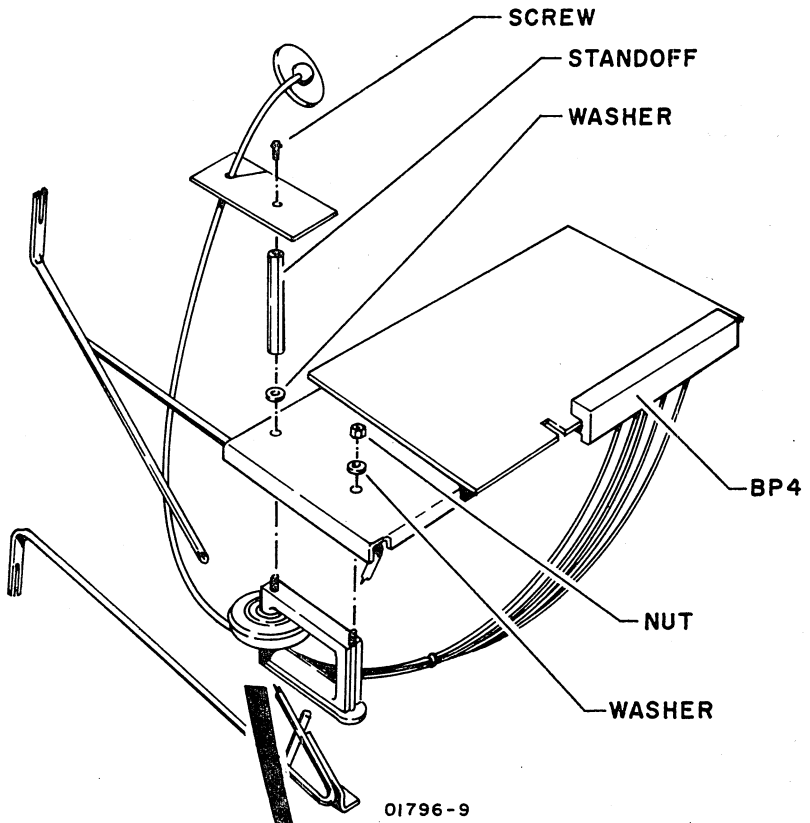

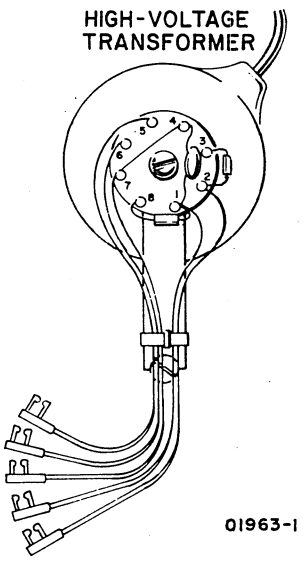

T1-1 to BP4-16
T1-2 to BP4-17
T1-5 to BP4-13
T1-6 to BP4-5
T1-7 to BP4-14

NOTE: HIGH-VOLTAGE TRANSFORMER ALSO COMES IN A VERSION WITH A RECTANGULAR BASE. CONNECTOR NUMBERING ON BOTH VERSIONS IS THE SAME.

Figure CRT23. High-Voltage Transformer Installation

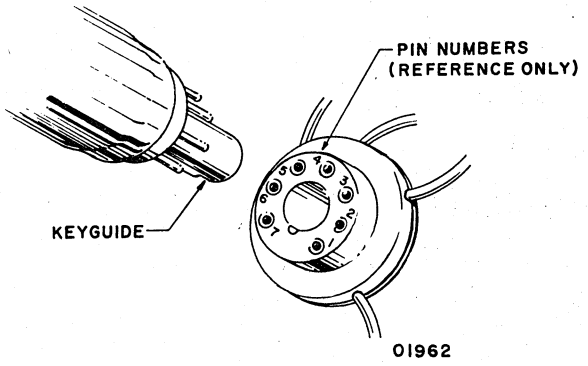

Figure CRT24. CRT Cap Removal

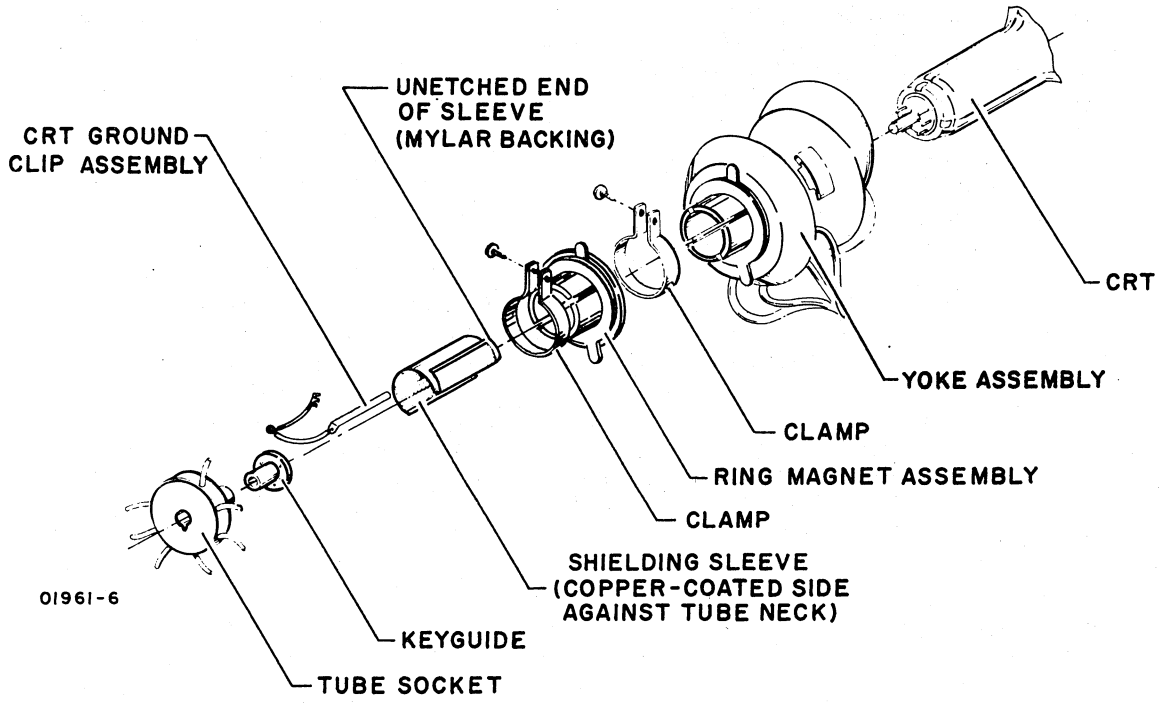

Figure CRT25. CRT Yoke Assembly

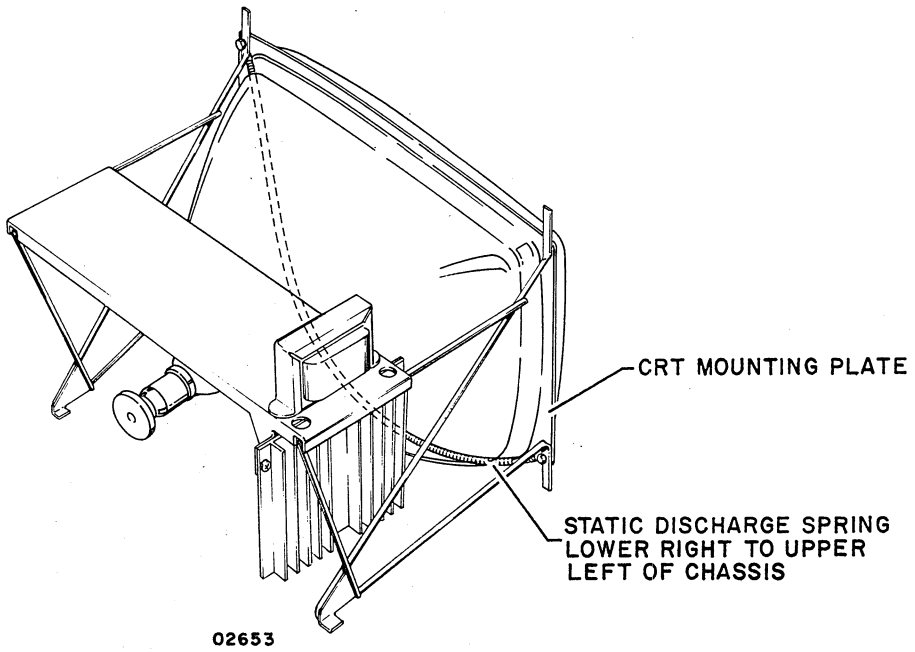

Figure CRT26. Static Discharge Spring Location

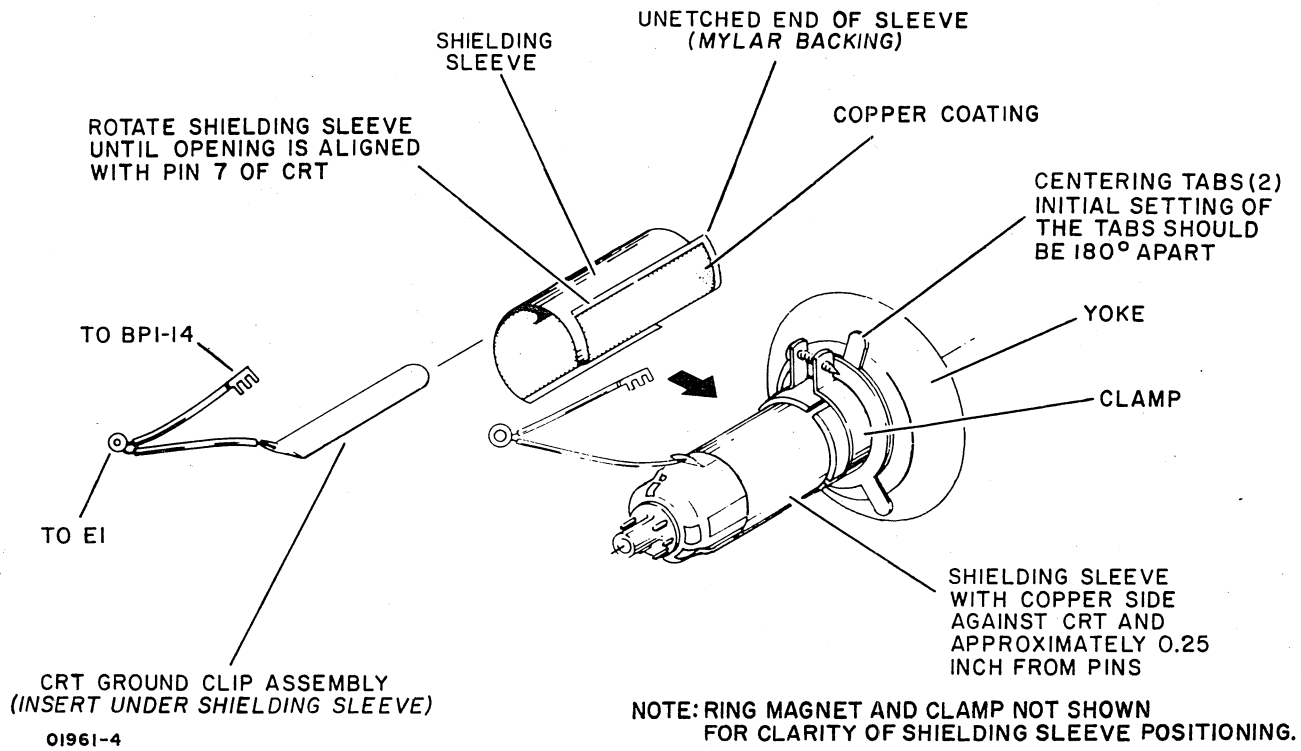

Figure CRT27. Position of Shielding Sleeve

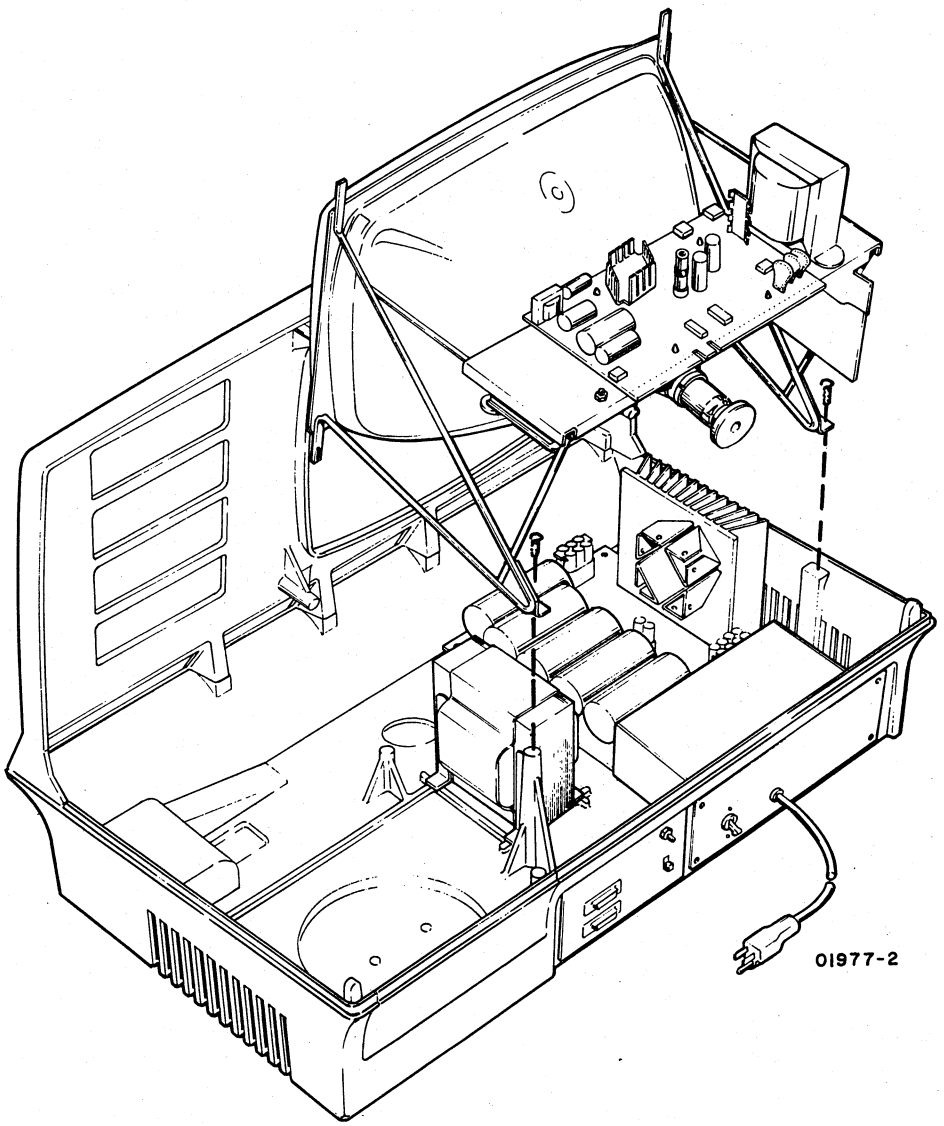

Figure CRT28. Monitor Assembly Removal

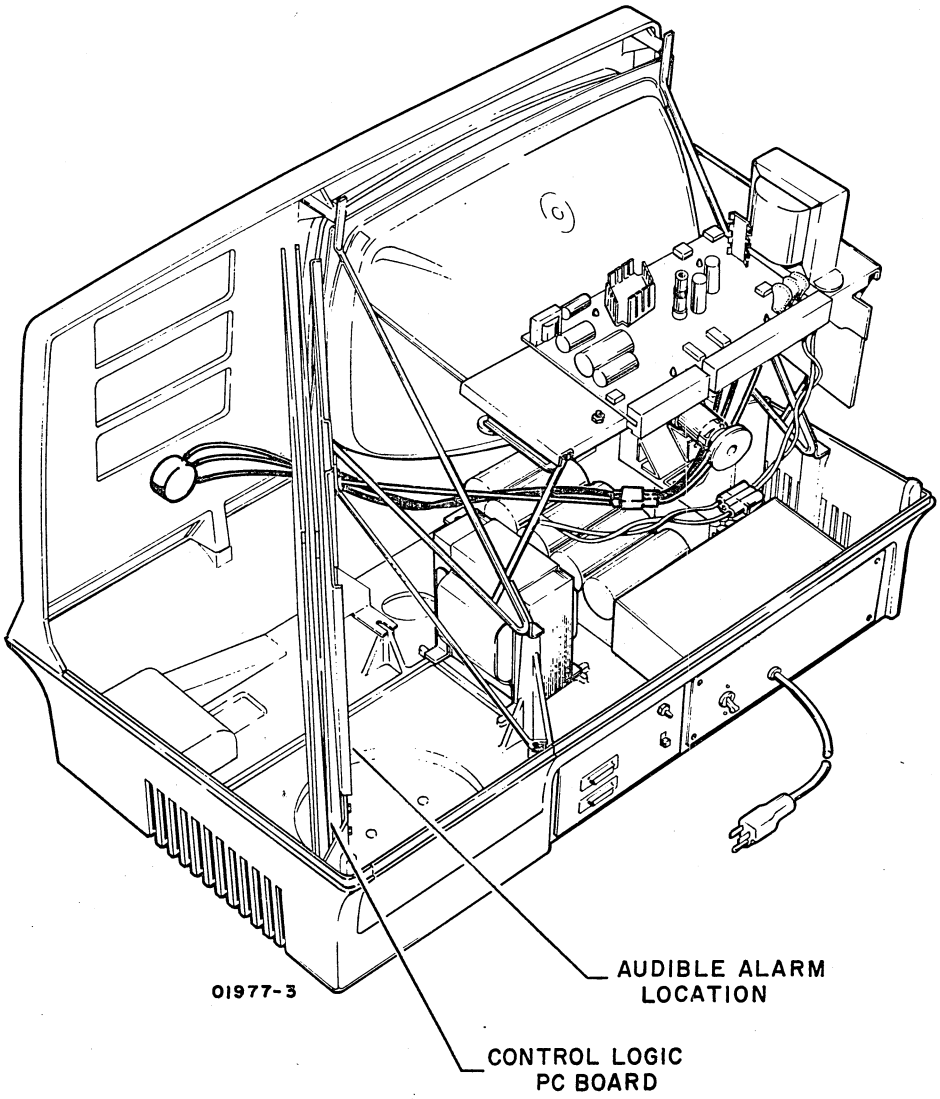

Figure CRT29. Location of Audible Alarm and Control Logic PC Board

TABLE NIP1. DDLT FOR NONIMPACT PRINTER (SHEET 1 OF 2)

POWER ON, SWITCHES, AND SUBSYSTEM TEST SECTION 6 CHECKS

ASSUME

Nonimpact printer is properly installed per procedures in appendix of associated Operators Guide/Reference Manual (see preface). Printer has paper installed and power turned on per procedure NIP1. Display terminal is operational and a printer error has either occurred or is suspected. Do nonimpact printer test portion of procedure TS6.

CONDITIONS	SITUATIONS 1	2	3	4	5	6	7	8
Is power on at printer?	Y	Y	Y	Y	Y	Y	N	OTHER
Does line feed (LF switch) operate correctly?	Y	Y	Y	Y	Y	N	-	
Does carriage return (CR switch) operate correctly?	Y	Y	Y	Y	N	-	-	
Does printer track keyboard inputs correctly; that is does it print uppercase and lowercase characters properly, line feed, carriage return, and backspace upon respective keyboard inputs? If so, key in a few lines of characters for use in print quality checks in table NIP2.	Y	Y	Y	N	-	-	-	
Is printhead movement correct?	Y	Y	N	-	-	-	-	
Do all characters print?	Y	N	-	-	-	-	-	

ACTIONS	SEQUENCE							
Perform print quality checks, sheet 2 of this DDLT.	X	-	-	-	-	-	-	-
Perform carriage return LED adjustment, procedure NIP6.	-	-	-	-	1	-	-	-
Perform printhead actuation adjustment, procedure NIP7.	-	3	-	-	-	-	-	-
Check fuse at rear of unit.	-	-	-	-	-	-	1	-
Check power available from site outlet.	-	-	-	-	-	-	2	-
Remove cabinet top and check internal cable connections.	-	2	-	-	-	-	3	-
Check power ON switch (continuity check with ac power cord disconnected from site outlet).	-	-	-	-	-	-	4	-
Replace power supply, procedure NIP12.	-	-	-	-	-	-	5	-
Check input/output cable connections at printer and other end.	-	1	1	1	-	-	-	-
Check serial input clock timing, procedure NIP10.	-	6	4	4	-	-	-	-
Replace print mechanism, procedure NIP11.	-	4	2	2	2	X	-	-
Call for assistance.	-	5	3	3	-	-	-	X
Note: After completing any repairs or maintenance, verify that the printer is operational by rerunning system checkout (procedure TS6).								

TABLE NIP1. DDLT FOR NONIMPACT PRINTER (SHEET 2 OF 2)

PRINT QUALITY CHECKS

ASSUME

Printer operation checks per sheet 1 of this DDLT completed.

CONDITIONS	SITUATIONS						
	1	2	3	4	5	6	7
Is horizontal character spacing correct?	Y	Y	Y	Y	Y	N	O
Is printing dark enough across entire page?	Y	Y	Y	Y	N	-	T
Is print density even across page?	Y	Y	Y	N	-	-	H
Is print density even from top to bottom of characters?	Y	Y	N	-	-	-	E
Does the printhead move steadily (not oscillate) during print operations?	Y	N	-	-	-	-	R
ACTIONS	**SEQUENCE**						
Nonimpact printer checks OK. Return to table TS1.	X	-	-	-	-	-	-
Perform head compensation adjustment, procedure NIP5.	-	-	-	-	1	-	-
Perform printhead actuation adjustment, procedure NIP7.	-	-	1	1	2	-	-
Perform retriggerable OS adjustment, procedure NIP3.	-	-	-	-	-	1	-
Check 1-kHz oscillator time, procedure NIP2.	-	-	2	2	3	-	-
Perform brake LED and one-shot adjustment, procedure NIP4.	-	1	-	-	-	-	-
Replace print mechanism, procedure NIP11.	-	2	3	3	4	2	-
Call for assistance.	-	-	-	-	-	-	X

Note: After completing any repairs or maintenance, verify that the printer is operational by rerunning system Checkout (procedure TS6).

NONIMPACT PRINTER CORRECTIVE MAINTENANCE PROCEDURES – GENERAL

Following pages contain all of the procedures that are referenced either from table NIP1, DDLT for Nonimpact Printer, or from elsewhere within this manual. In addition, other procedures which may serve useful (NIP8 and 9) are provided.

Parts replacement level for the nonimpact printer is to the printer mechanism (including circuit cards), power supply assembly, fuse, and printer interface control board in the display terminal. If a procedure allows a lower level of replacement than the standard on-site spare parts list, such as complete parts list in printer manual, or calls for adjustments more detailed than it may be able to perform on site because of limited equipment/or facilities — then it is up to the customer engineer to resolve a problem by using the lowest level field-replaceable assembly or part available.

WARNING

Any time the NIP cabinet hood is removed, if it is necessary to work near the exposed underside of the power ON switch or near any of the ac input power lines, always shut power off and disconnect ac power cord from site power outlet.

Procedure NIP1 – Paper Loading and Power On

Select paper as recommended under the heading Nonimpact Printer Paper at the end on this procedure, and perform the following steps:

1) See that printer power ON switch is not lit (press to turn off).
2) Open paper cover by pressing at rear of cover.
3) Remove paper spindle by lifting straight up.
4) Remove old paper core and install new paper roll on spindle.
5) Set paper roll behind printer, lift paper rod and thread paper around paper rod and between paper guides (see figure NIP1).
6) Feed paper through printer by turning paper feed roll by hand.
7) Roll up slack and replace spindle and paper in the paper roll slot of printer.
8) Close paper cover.
9) Press printer power ON switch so it lights indicating power on.
10) Press the LF (line feed) switch to ensure that the paper is feeding properly.

Nonimpact Printer Paper

The nonimpact printer uses continuous-roll, thermal-sensitive paper for printing. Recommended paper is white background with blue print. This paper is available in 100-ft (30.5-m) rolls in cartons of 24 rolls (CDC part number 90500521 for a full carton).

Procedure NIP2 – 1-kHz Oscillator Adjustment

The 1-kHz oscillator clocks the counter which controls the printer operation timing. Therefore, it is important to ensure that the frequency output is correct. See figure NIP2 for 1-kHz oscillator location and proceed as follows.

1) Connect all power to the printer.

2) Connect oscillator probe to 1-kHz test point at front of control logic board.

3) Check frequency of oscillator. Frequency must be 1 kHz ±20 Hz (1 ±0.02 ms per cycle).

4) If adjustment is required, adjust 1-kHz oscillator potentiometer on control logic board to obtain required frequency.

Procedure NIP3 – Retriggerable One-Shot (ROS) Adjustment

During a carriage advance or backspace operation, ROS time is used to reduce the stepping motor winding current to a lower hold level after stepping and braking have occurred. If the ROS time is too short, horizontal print spacing can be affected. During the slowdown portion of the carriage return time, the ROS time determines the time between stepping pulses. Therefore, the slowdown of the printhead during carriage return is affected by ROS timing. See figure NIP2 for one-shot location and proceed as follows.

1) Connect oscilloscope probe to ROS test point at front of control logic board.

2) Connect all power to printer.

3) Use keyboard inputs to advance printer carriage while observing ROS pulses on oscilloscope.

4) ROS must be a 10-ms pulse for every carriage advance step.

5) Adjust ROS potentiometer on logic control board to obtain the proper pulse duration.

Procedure NIP4 – Brake LED Block And Brake One-Shot Adjustment

During carriage advance and backspace operations, the printhead is brought into contact with the paper by the platen solenoid, printing occurs, the printhead is moved back from the paper, and then the stepping motor moves the head to the next column position. For proper printing, the printhead must be horizontally stationary at each column position when printing at maximum speed. Oscillations of the printhead cannot be tolerated since print quality would be affected. Oscillations can be caused by improper position of the brake LED block or improper setting of the brake one-shot time. Motor braking is initiated by the brake LED and its duration is controlled by the brake one-shot time. In this procedure, a visual check of the clock disc is made to determine if oscillations are present. The platen solenoid is disabled because oscillations would be damped by the head contacting the platen. (See figures NIP 3 and NIP5).

1) Disable platen solenoid by holding finger on platen solenoid guide bar arm to prevent solenoid operation.

2) Connect all power to the printer.

3) Use keyboard of display terminal to cause repetition of carriage advance for approximately 60 columns followed by backspaces for approximately 60 columns.

4) Observe top of brake LED block in relation to clock disc. Block should be aligned with a slot in clock disc and disc must appear to stand still (no oscillating) for both carriage advance and backspace. If adjustment is required, perform steps 5 through 7.

5) Loosen one (center) slotted-head screw that secures brake and slew LED brackets.

6) Loosen one socket-head lock screw to permit adjustment of brake LED block position.

7) Alternately adjust brake LED block position and brake one-shot time, until conditions of step 4 are obtained. Adjust brake LED block position by turning slotted-head accentric. Adjust brake one-shot time by adjusting brake potentiometer at front of control logic board (figure NIP2). Tighten screws.

NOTE

If difficulty occurs in damping out oscillations, check oscillation of printhead cable. If cable oscillates more than 1/4 inch, replace entire print mechanism (procedure NIP11). If oscillation is less than 1/4 inch, recheck ROS time as outlined in procedure NIP3. If oscillations still are present check output of brake LED. See procedure NIP2.

Procedure NIP5 – Head Compensating Circuit Adjustment

The purpose of this circuit is to control the heating time of the printhead elements. The heating time is automatically varied by the circuit to compensate for different printing speeds. The purpose of this procedure is to provide an initial setting of the circuit time when printing at maximum speed. Then, when the printer is operable, the time may be readjusted to provide desired print quality. See figure NIP2 and proceed as follows.

1) Apply all power to printer.

2) Connect oscilloscope probe to test point PRT at front of signal processing board. Trigger internal (+).

3) Use keyboard REPEAT and character keys to activate printer while observing test point pulse on oscilloscope.

4) The output transistor must turn on for the time indicated below for the particular speed at which the printer is to be operated. Adjust head compensating potentiometer on signal processing board to obtain a pulse duration of 6.5 ms.

5) Secure potentiometer screw with cement (Loctite, or equivalent).

6) When printer is operable, check print quality. If quality is not acceptable, refer to procedure NIP8, Print Quality Adjustments.

Procedure NIP6 – Carriage Return LED Block Adjustment

This procedure describes adjustments for the positions of the LED blocks associated with carriage return. These LEDs are start of line, slowdown, end of line, and slew. The LEDs are positioned to provide carriage return operation within the maximum time permissible (200 ms) and minimize printhead oscillation at column 1. This procedure should be performed when any of the carriage return components have been replaced or when any of the LED block positions have been changed. See figure NIP2 and proceed as follows.

1) Loosen the LED block clamping screw on each of the start of line, slowdown, and end of line LED blocks.

2) Set the initial positions of the three LED blocks as follows:

   a) Position left side of start of line LED block 7/16 inch from left side frame.

   b) Position slowdown LED block until spacing between start of line block and slowdown block is 5/16 inch.

   c) Position right side of end of line LED block 3/16 inch from right side frame.

3) Connect all power to the printer.

4) Manually move printhead to approximately column 15 and initiate a discrete carriage return operation.

NOTE

A discrete carriage return operation can be initiated by pressing the CR switch.

5) Measure distance between printhead carriage and left side frame. Distance should be 3/16 inch (see figure NIP5).

6) If adjustment of printhead home position is required, loosen two socket-head screws in cable drive drum (figure NIP3) and rotate drum until printhead is 3/16 inch from left side frame. Tighten screws.

7) Move printhead to approximately column 60 and initiate a discrete carriage return operation. For this step the carriage return command must be maintained (hold CR switch down).

8) If printhead oscillates at home position, move start of line LED block left or right in small increments (approximately 0.001 inch) until head stops oscillating.

9) Release CR switch.

10) Repeat steps 7 through 9, except start with printhead at a column near column 80 (75 to 79).

11) With keyboard display and printer connected and with display terminal power on, use the keyboard to cause printhead to step to column two. Actuate a discrete carriage return. If printhead does not return to column one, move start of line LED block to the left in small increments (approximately 0.001 inch) until carriage return from column two is achieved.

12) If start of line LED block was moved in step 11, repeat steps 7 through 10. If start of line block is again moved to stop oscillations, repeat step 11.

13) Trigger oscilloscope on CR test point at front of control logic board (figure NIP2) and set trigger to external (+). Connect oscilloscope probe to SD test point.

14) Use keyboard REPEAT and character keys to cause continuous printing and automatic carriage return by the end of line LED.

15) Measure time between oscilloscope trigger (rise of CR) and rise of SD. Time must be 110 ±5 ms.

16) If adjustment is required, loosen one (center) slotted-head screw and one socket-head screw to permit adjustment of slew LED block (see figure NIP5). Turn slotted-head eccentric and adjust slew block position until requirement of step 15 is met. Tighten two screws.

NOTE

In the process of adjusting the slew LED block, the block should not be positioned at the extreme left. If positioned to the extreme left, the slew block may be in contact with the eccentric adjustment of the platen solenoid arm. Repositioning the clock disc will center the adjustment and provide future adjustment range without mechanical interference.

To reposition the clock disc, loosen the clock disc set screws, and with the motor shaft held stationary (by holding the printhead), move the clock disc by a one-half slot separation and then tighten, ensuring that the disc does not rub the brake or slew blocks. Readjust the brake and slew (step 16) blocks for proper printer operation.

17) Trigger oscilloscope on SD test point on control logic board and set trigger to external (-). Connect one oscilloscope probe to SD test point.

18) **Use keyboard to step printhead from column 1 to column 6. SD should fall as printhead steps into column 6. Adjust position of slowdown LED block to meet this condition.**

19) **Use keyboard REPEAT and character keys to cause continuous printing and automatic carriage return by end of line LED.**

20) Trigger on CR test point (+ trigger), and look at SD with the probe. Recheck the CR time from EOL to SD at step 15. Adjust the slew if this condition is not met. On printers with adjustable home position (HPOS) time, HPOS should be set for 40 to 60 ms. **Be sure that a slew pulse does** not occur close to the leading edge of the SD phototransistor pulse.

NOTE

The **40 to 60 ms is only a guide and should not be** used as a criterion for rejection. The objective is to arrive at CR time of 160 to 185 ms when warmed up and an absolute maximum of 200 ms when cold.

Final position of slowdown block should be such that the nominal distance between slowdown and start of line blocks is 5/16 ±1/16 inch. (This criterion is included as a guide; note that this is only a nominal value.)

21) Insert paper in printer.

22) Trigger oscilloscope on $\overline{MT}$ test point and set trigger to external (-). Connect one oscilloscope probe to $\overline{MT}$ test point and second probe to EOL test point.

23) Use keyboard REPEAT and character keys to cause continuous printing and automatic carriage return by end of line LED.

24) Adjust position of end of line LED block so that rise of EOL comes within 1 ms after rise of $\overline{MT}$ for column 80. Make sure column 80 print is present.

25) Trigger oscilloscope on CR test point and set trigger to external (+). Connect oscilloscope probe to BSY test point.

26) Use keyboard REPEAT and character keys to cause continuous printing and automatic carriage return by end of line LED.

27) Measure time that BSY stays true after CR trigger. Time should be 150 to 175 ms (200 ms maximum). If this requirement is not met, repeat steps 13 through 16, and 17 through 20.

28) Tighten all LED block clamping screws.

Procedure NIP7 – Printhead Actuation Adjustment

This procedure contains instructions for adjustment of the printer to obtain proper printhead actuation and noise control. The platen solenoid housing must be positioned to prevent plunger bottoming and to ensure free plunger movement. The upper eccentric stop is adjusted to absorb some of the impact as the printhead contacts the paper. Uniform print density from top to bottom of a character and across the entire line is obtained by adjustment of the platen assembly. The lower eccentric stop is adjusted to provide proper guide bar arm travel between the two stops. The damper pad is adjusted to contact the solenoid plunger and reduce noise without restricting the plunger movement. (See figures NIP3, 6, and 7.)

1) Disconnect all power and signal inputs to the printer.

2) Remove paper. If switch bracket is in the way, remove two screws and move bracket out of way.

3) Move plunger into platen solenoid housing until printhead just contacts rubber platen. Check to see that after head contacts platen, plunger can be pushed approximately 1/32 inch into housing and does not bind. If adjustment is required, perform steps 4 through 6.

4) Loosen two slotted-head screws which mount the platen solenoid housing to the frame.

5) Manually move printhead down until it just contacts platen and hold it in this position. Move solenoid housing until plunger bottoms. Mark solenoid housing position on side frame. Release printhead. Move solenoid housing back approximately 1/32 inch from mark on frame. Tighten two screws.

6) Check to see that plunger moves freely in housing and does not bind. If binding occurs, loosen two screws and skew housing until plunger is free. Make sure that 1/32-inch dimension obtained in step 4 is maintained.

7) Insert paper. Connect power and signal inputs to the printer and use keyboard REPEAT and character keys to print several lines of different characters (preferably uppercase characters).

8) Check print density from top to bottom of character. If density varies, perform step 9. If density is uniform, proceed to step 10.

9) Loosen four socket-head screws (two on each side) securing platen assembly to side plates. Tilt assembly forward or backward to obtain uniform print density from top to bottom of character. Tighten four screws. Recheck print density.

10) While printing, place a 0.010-inch feeler gauge between upper eccentric stop and guide bar arm. If upper eccentric stop is properly adjusted, print quality should deteriorate significantly when gauge is inserted. If adjustment is required, perform step 11. If adjustment is correct, proceed to step 12.

11) Loosen one socket-head screw to permit rotation of upper eccentric. Rotate eccentric in counterclockwise direction until print becomes light. Back off eccentric just enough to restore good quality print. Repeat step 10.

12) If print density varies from left to right across the page, it is necessary to reposition the platen assembly. Loosen two socket-head screws securing side of platen assembly where light printing is occurring and move this side of assembly forward to obtain uniform print density. Tighten screws. Recheck step 10.

NOTE

When moving platen assembly, take care not to tilt assembly. Tilting will affect print quality.

13) Disconnect all power and signal inputs to the printer.

14) Using a feeler gauge, check the clearance between the upper stop eccentric and the guide bar arm. The clearance must be 0.020 to 0.025 inch (see figure NIP6). If adjustment is required, loosen one socket-head screw to permit rotation of lower stop eccentric. Place a 0.022-inch gauge between the guide bar arm and upper stop eccentric. Rotate lower stop eccentric until contact is made between guide bar arm, gauge, and upper eccentric. Tighten screw.

15) Connect all power and signal inputs to the printer and repeat step 7 to again cause printing.

16) Check print quality. If print has a dark cast or printhead drags on paper during carriage return, the solenoid plunger damper pad may be adjusted too tight, restricting solenoid plunger movement. If print quality is good, but vibration and noise is discernible, the damper pad may be adjusted too loose. Loosen locknut and turn damper pad adjusting screw to increase pad pressure until print quality is affected. Then back off screw just enough to obtain good print quality. Tighten nut (see figure NIP7).

Procedure NIP8 – Print Quality Adjustments

Table NIP2 lists the different types of poor print quality and references the adjustment procedures which can be performed to correct the problem.

Procedure NIP9 – Out-of-Paper Switch Adjustment

The Out-of-Paper switch must be adjusted to actuate when paper is inserted in the printer and deactuate when paper is removed. Adjustment is accomplished by positioning the switch. See figure NIP8 and proceed as follows.

1) Remove paper from printer.

2) Slowly insert paper into printer while listening for switch to actuate. An ohmmeter may be used in a noisy environment.

3) After switch actuates, observe actuator arm to ensure that some overtravel is present.

4) Slowly remove paper while listening for switch to deactuate.

5) After switch deactuates, observe actuator arm to ensure that some overtravel is present.

6) If adjustment is required, loosen two switch-mounting screws on left side frame and position switch to meet requirements of steps 3 and 5. Tighten screws and repeat steps 2 through 5.

7) Connect power to printer and check ready output line at pin 36 of input/output connector P37. Voltage should be +5 volts with paper inserted and 0 volt with paper removed.

Procedure NIP10 – Serial Input Clock Adjustment

The serial input clock must be adjusted so that it occurs as close as possible to the center of each data bit time. This provides tolerance for input signal distortion. There are two interacting adjustments required to properly position the clock pulses: (1) delay one-shot time and (2) multivibrator frequency. The delay one-shot time determines the position of the first clock at data bit one time. The multivibrator frequency determines the position of the subsequent clock pulses. See figures NIP2 and NIP9 and proceed as follows.

1) Connect all power to the printer.

2) Using a dual trace oscilloscope, trigger the oscilloscope on the falling edge of $\overline{DOS}$ (test point OS at front of signal processing board).

3) Set the oscilloscope time base to display one character time.

4) Apply an input signal from a square wave generator set to the baud rate of the printer or apply an input code consisting of alternating 101s.

5) Connect one probe of the oscilloscope to the DATA test point.

6) Connect the other probe to $\overline{MV}$ (CK test point).

7) Check the clock position (rise of $\overline{MV}$) for data bit one time. If the clock is not centered, adjust the one-shot potentiometer.

8) Check the clock position for the last data bit time. If the clock is not centered, adjust the multivibrator potentiometer.

9) If the oscilloscope has a 5X magnifier, turn on the magnifier and repeat step 7.

10) Move the trace to the left and repeat step 8.

NOTE

Steps 7 and 8 should be repeated several times because of the interaction of the two adjustments.

Procedure NIP11 – Replacing Print Mechanism

Perform the following steps to replace the print mechanism (see figure NIP10).

1) Remove ac power cord from site outlet.

2) Disconnect internal connector which is on end of printer mechanism signal cable and is located at back of power supply just above RS-232-C input/output connector.

3) Tilt printer cabinet up on either left or right side and loosen the four, large, shock-mounting retainer screws which hold the print mechanism to the chassis base and are accessible through four large, round holes in the base of the cabinet.

CAUTION

Do not tilt printer cabinet up on its back with an input/output connector attached to the rear of the cabinet or serious connector damage will result.

4) While holding print mechanism so it does not fall, remove the four retainer screws and separate mechanism from cabinet base. Carefully lower cabinet base and print mechanism to normal resting position.

NOTE

An alternate removal method is to remove the four hex nuts (and washers) that secure the metal baseplate under the printer mechanism. Two of these nuts are at the front corners of the mechanism and the other two also hold the power supply shield. This method then requires removing the mechanism from the baseplate.

5) Replace print mechanism by doing the preceding steps in reverse order (making sure mechanism is approximately centered in its mounting slots) and then check operation thoroughly by following table NIP1, DDLT for Nonimpact Printer.

NOTE

Starting with CL114-A03, CL114-B03, and CL114-C03 a new design print mechanism with detachable interconnect cable and backplane PC card is used in the nonimpact printer. The new print mechanisms are interchangeable both ways with the previously used print mechanism units. That is, the older units can be replaced with the new or the new units can be replaced with the old units. Reference printer spare parts list in section 7 for part numbers of print mechanisms.

Procedure NIP12 – Replacing Power Supply

Perform the following steps to replace the power supply (see figure NIP10).

1) Remove ac power cord from site outlet.

2) Disconnect both quick-disconnect connectors from cable at right side of power supply.

3) Remove two nuts which hold power supply shield in place (screws are on cover flange between power supply and print mechanism) and lift cover free to provide clearance for power supply removal.

4) Unscrew four large screws (2 each side) from power supply mounting flanges and slide power supply out from under print mechanism cable.

5) Replace power supply by doing the preceding steps in reverse order and then check operation thoroughly by following table NIP1, DDLT for Nonimpact Printer.

Procedure NIP13 – Replacing/Adjusting Miscellaneous Parts:

If required to replace/adjust parts below the on-site spares level (on-site spares being: power supply, fuses, and printer mechanism) refer to the Nonimpact Printer Hardware Maintenance Manual (see preface for publication number).

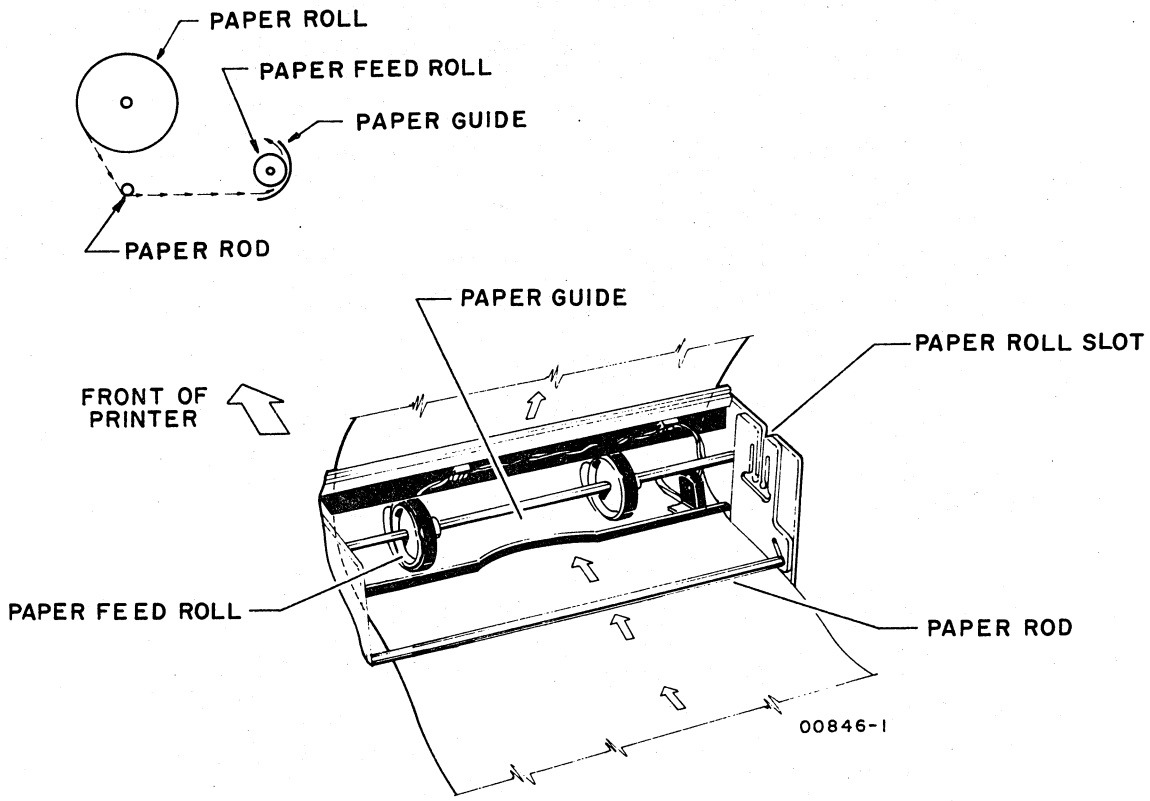

Figure NIP1. Paper Loading, Nonimpact Printer

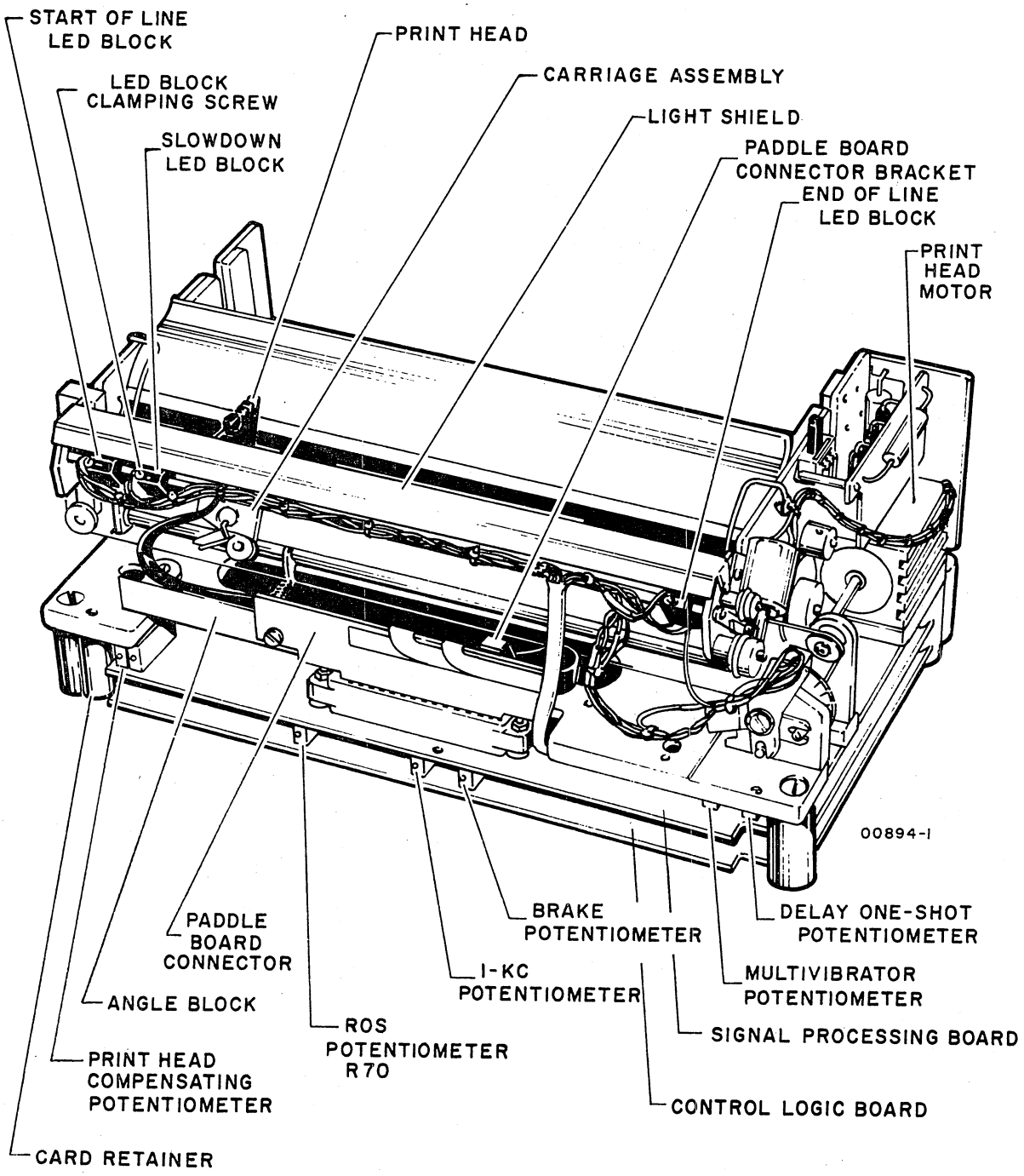

Figure NIP2. Printer, Front View

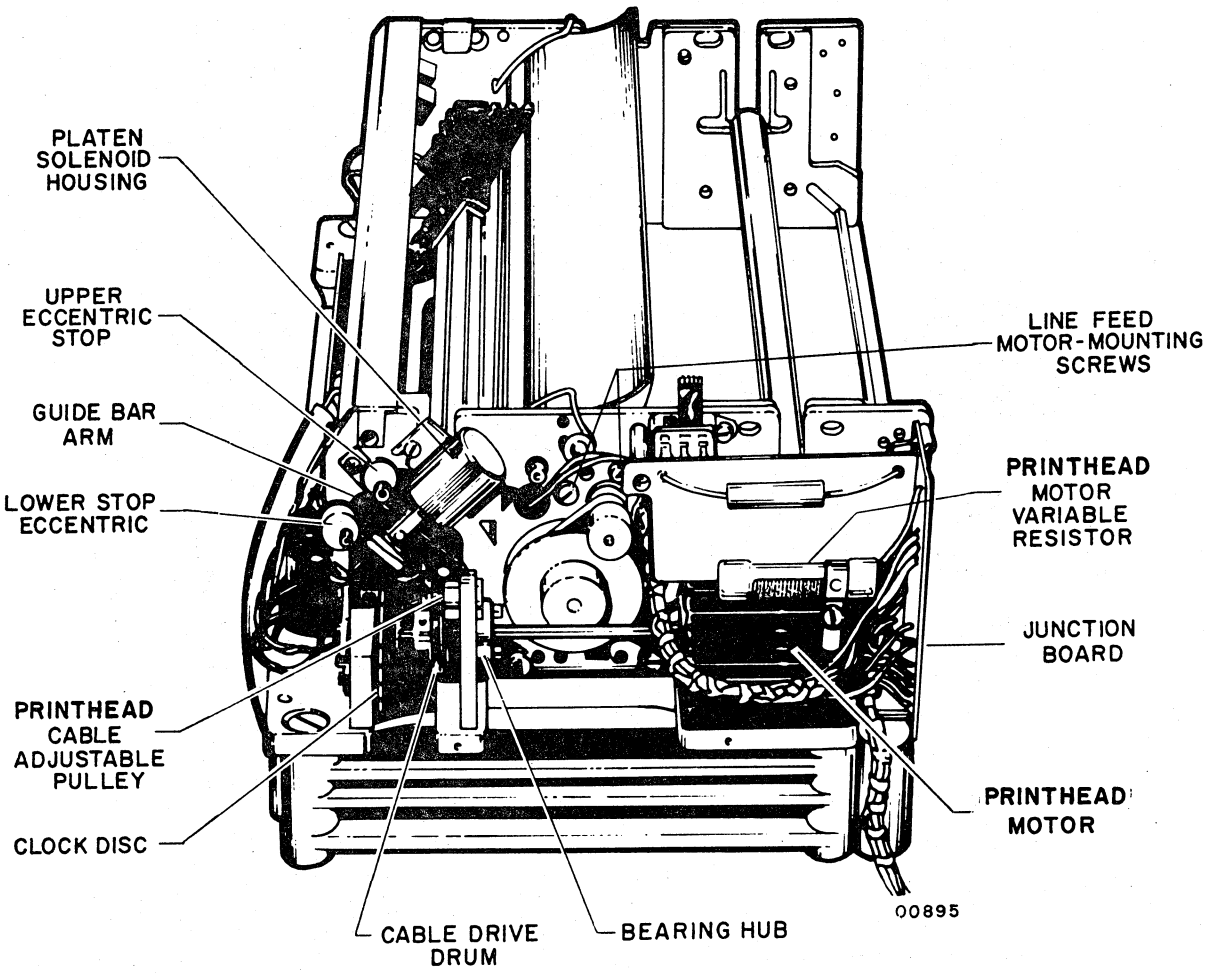

Figure NIP3. Printer, Right Side View

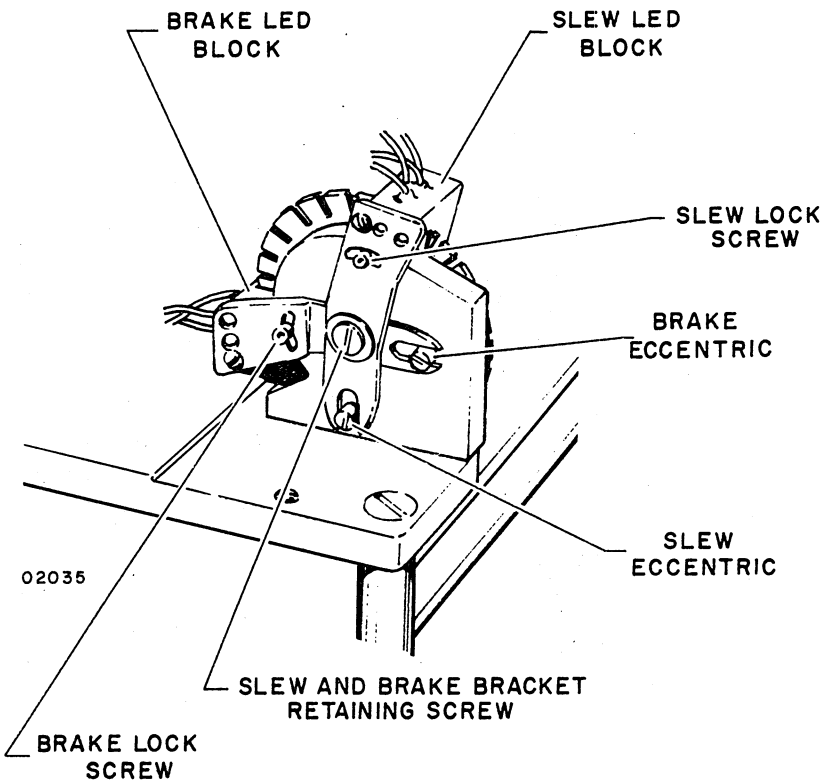

Figure NIP4. Printer, Right Front View

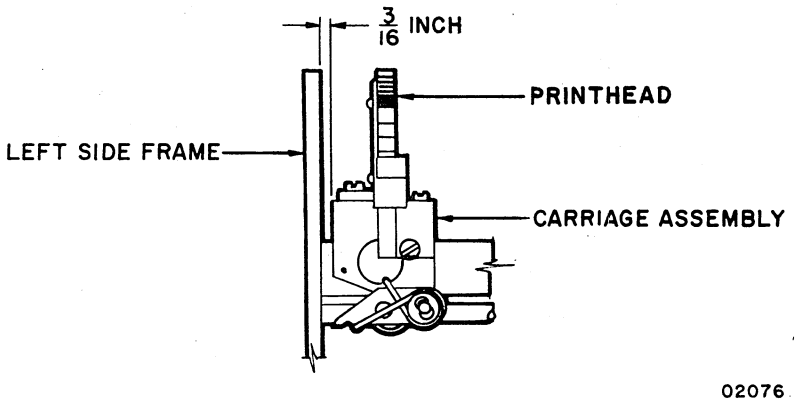

Figure NIP5. Printhead Home Position

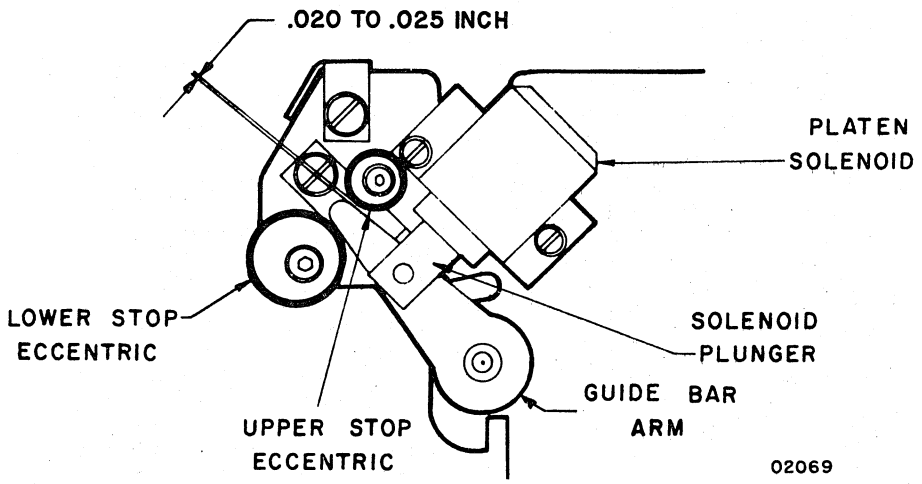

Figure NIP6. Guide Bar Arm Travel

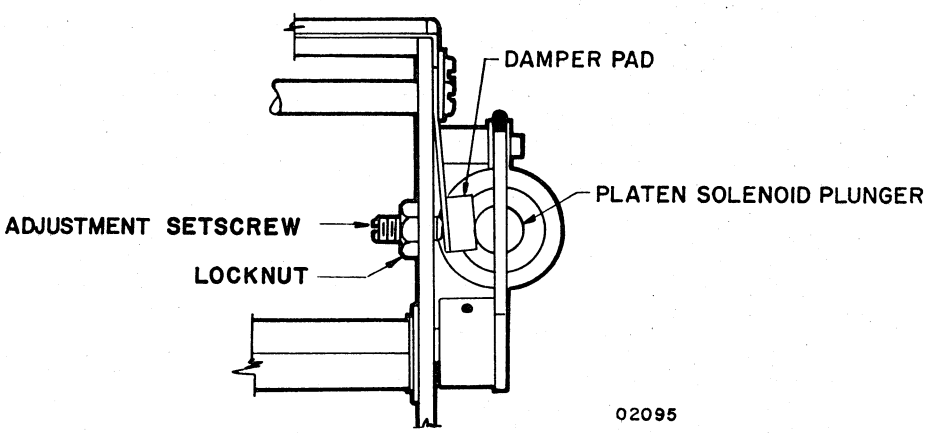

Figure NIP7. Damper Pad Adjustment

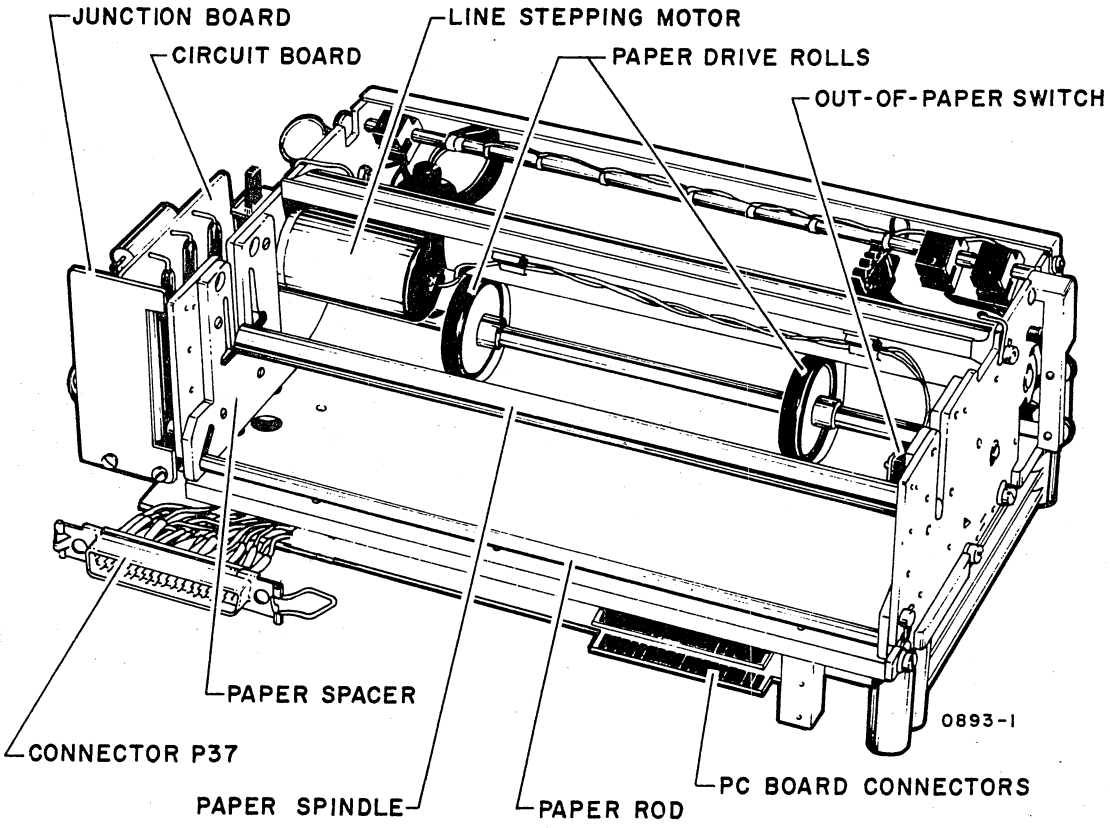

Figure NIP8. Printer, Rear View

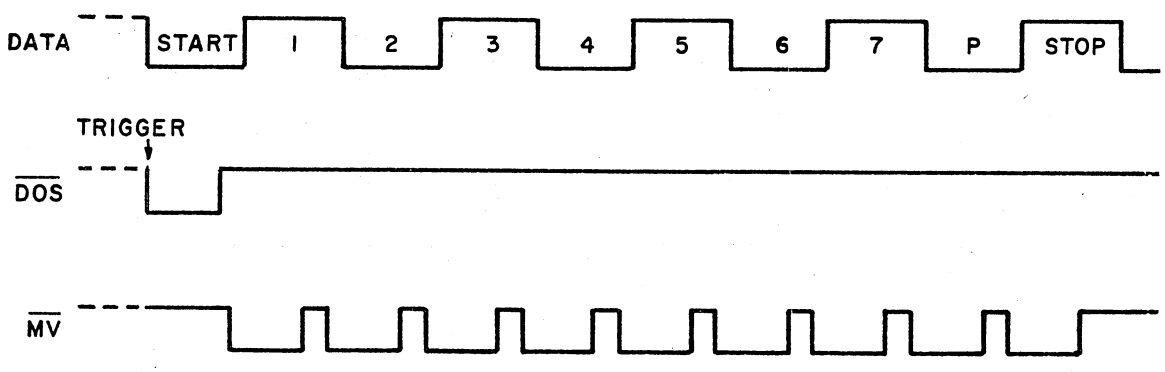

Figure NIP9. Serial Clock Timing

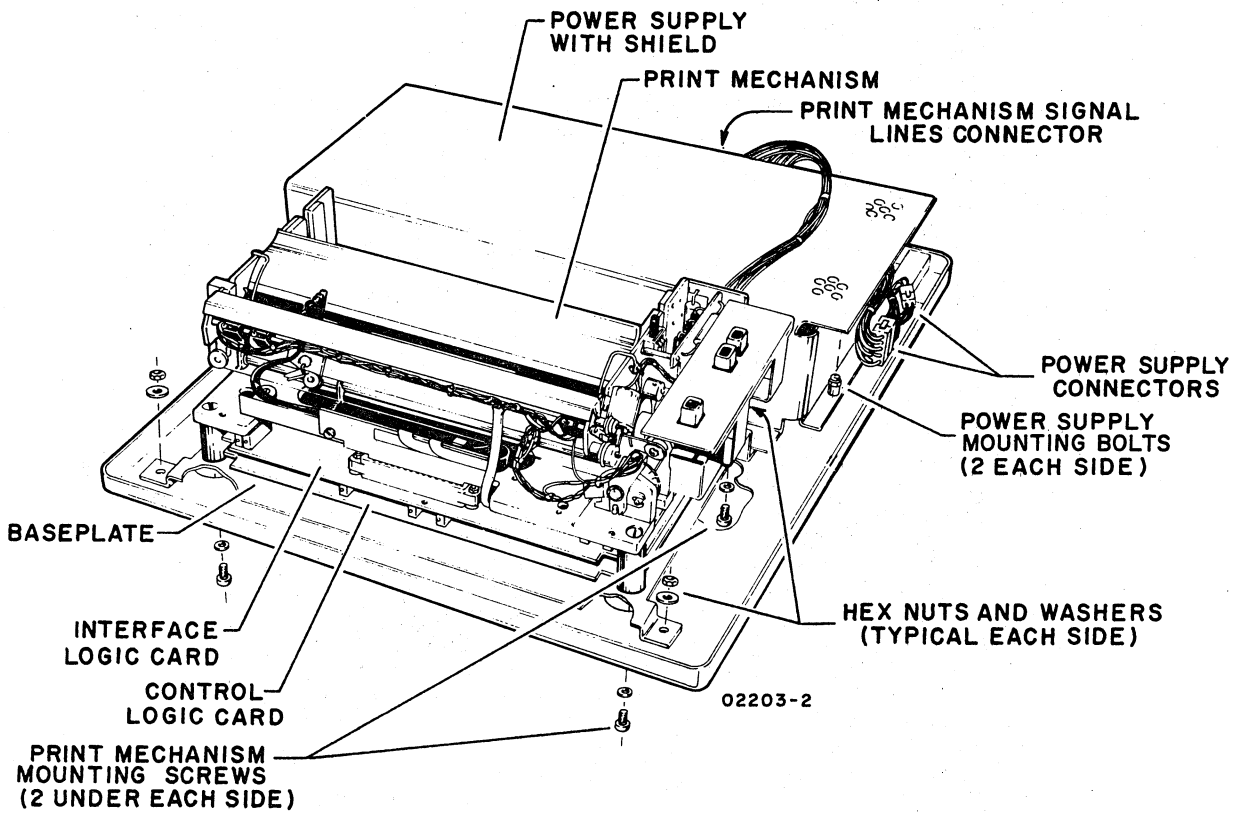

Figure NIP10. Location of Major Replaceable Modules

TABLE NIP2. PRINT QUALITY

PROBLEM	ADJUSTMENT PROCEDURE
Too light across entire page	NIP5, Head Compensating Circuit Adjustment NIP7, Printhead Actuation Adjustment
Uneven density across page	NIP7, Printhead Actuation Adjustment
Uneven density from top to bottom of character	NIP7, Printhead Actuation Adjustment

TABLE 55IMP1. DDLT FOR 55-LPM IMPACT PRINTER (SHEET 1 OF 4)

POWER ON AND EXTERNAL SWITCH CHECKS (EXCLUDING TEST PRINT)

ASSUME

Printer installed properly per procedure in appendix of associated Operators Guide/Reference Manual (see preface). Paper, ribbon, and format tape loaded (procedure 55IMP3, 4, and 5) and power ON/OFF switch pressed to ON (procedure 55 IMP1).

CONDITIONS	SITUATIONS							
	1	2	3	4	5	6	7	8
Is power on at printer (ON/OFF switch on and drive motor running)?	Y	Y	Y	Y	N	N	N	OTHER
Is ON/OFF switch on but motor not running?	-	-	-	-	-	Y	N	
Does FORM FEED operate correctly?	Y	Y	N	N	-	-	-	
Does forms runaway condition (continuous paper feed) occur? (Stop runaway by pressing power OFF.)	-	-	Y	N	-	-	-	
Does START/STOP switch light/extinguish when pressed/repressed?	Y	N	-	-	-	-	-	
ACTIONS	**SEQUENCE**							
Perform TEST PRINT, sheet 2 of this DDLT.	X	-	-	-	-	-	-	-
Check that front access panel is in place activating interlock switch (or if front panel open, interlock switch pulled up).	-	-	-	-	-	-	1	-
Check power available from site outlet (see specifications in section 1 for 60-Hz and 50-Hz printer input power).	-	-	-	-	-	-	2	-
Check ON/OFF circuit breaker indicator portion for continuity (figures 55IMP12 and 55IMP13); replace ON/OFF switch/indicator if necessary (procedure 55IMP17.	-	-	-	-	2	-	-	-
Check internal cables/connections (figures 55IMP11, 12, 13, and 14 and procedure 55IMP14).	-	-	-	-	1	1	4	-
Disconnect ac power cord and check power cord and ON/OFF switch for continuity; replace as necessary (procedure 55IMP17).	-	-	-	-	-	-	3	-
Check/replace power transformer 2T01 (procedure 55IMP17).	-	-	-	-	3	2	6	-
Check/replace line filter 3LF01 (procedure 55IMP17).	-	-	-	-	-	3	5	-
Check/replace drive motor (procedure 55IMP17).	-	-	-	-	-	4	7	-
Check/replace format tape (procedure 55IMP5) and format reader (procedure 55IMP15 and 55IMP17).	-	-	1	1	-	-	-	-
Open logic chassis panel (procedure 55IMP6) and observe printed circuit boards for proper seating (figure 55IMP6).	-	1	2	2	-	-	-	-
Check/replace fuse(s) on power supply board (procedure 55IMP12); replace power supply board (procedure 55IMP7).	-	-	3	3	-	-	-	-
Check/replace fuse(s) on driver board (procedure 55IMP12); replace driver board if required (procedure 55IMP9).	-	-	-	4	-	-	-	-
Replace common controller board (procedure 55IMP7).	-	2	-	5	-	-	-	-
Replace RS-232-C interface board (procedure 55IMP7).	-	-	-	6	-	-	-	-
Switch power OFF and check subject switch for continuity; replace if required (procedure 55IMP17).	-	3	4	7	-	-	-	-
Check subject switch cables/wires to/from switch and circuits (procedure 55IMP14).	-	4	-	8	-	-	9	-
See detailed diagrams/information in field service manual for printer (see preface) and check/adjust/replace further procedures 55IMP15, 16, and 17.	-	5	5	9	-	5	8	-
Problem not covered in manual. Call for assistance.	-	-	-	-	-	-	-	X
Note: After completing any repairs or maintenance, verify that the printer is operational by activating TEST PRINT.								

TABLE 55IMP1. DDLT FOR 55-LPM IMPACT PRINTER (SHEET 2 OF 4)

TEST PRINT

ASSUME

Power on and external switch checks of sheet 1 of this DDLT ran OK and power is still on.

CONDITIONS	SITUATIONS 1	2	3	4	5	6	7	8	9
With START/STOP switch extinguished (offline), activate TEST PRINT switch. Does printer produce printout of Impact Printer TEST PRINT Pattern exactly as shown in figure TS5.	Y	N	N	N	N	N	N	N	OTHER
Are forms feeding correctly (by not being in runaway condition or otherwise incorrectly advancing)? (Stop runaway by pressing power OFF.)	Y	N	N	Y	Y	Y	Y	Y	
Is printhead movement correct?	Y	N	-	N	Y	Y	Y	Y	
Is there any printout?	Y	N	-	-	N	Y	Y	Y	
Are all portions of all characters printed?	Y	N	-	-	-	N	Y	Y	
Is each character printed the proper one?	Y	N	-	-	-	-	N	Y	
Is ribbon advancing properly? (Ribbon will advance in either direction depending on position of reversing levers; check this.)	Y	N	-	-	-	-	-	N	

ACTIONS	SEQUENCE								
Perform print quality checks; sheet 3 of this DDLT.	X	-	-	-	-	-	-	-	-
Open logic chassis panel (procedure 55IMP6) and observe printed circuit boards for proper seating (figure 55IMP6).	-	1	2	1	1	1	1	1	-
Check/replace fuse(s) on driver board (procedure 55IMP12), replace driver board if required (procedure 55IMP9).	-	2	5	2	2	2	-	-	-
Replace common controller board (procedure 55IMP7).	-	3	4	-	3	3	2	-	-
Replace LSI equivalent board (procedure 55IMP7).	-	-	6	3	4	-	3	-	-
Press power to OFF and check for TEST PRINT switch continuity, replace if required (procedure 55IMP17).	-	4	-	-	-	-	-	-	-
Check/replace fuse(s) in power supply board (procedure 55IMP12); replace power supply board if required (procedure 55IMP9).	-	-	3	-	-	-	-	3	-
Check TEST PRINT switch cables/wires to/from switch and circuits (procedure 55IMP14).	-	5	-	-	-	-	-	-	-
Check/replace switching relay and/or power triacs on logic chassis backplane (procedure 55IMP17).	-	-	-	-	-	-	-	2	-
See detailed field service manual and parts manual (see preface) and check/adjust/replace until fault is found (procedures 55IMP15, 16, and 17).	-	7	7	6	9	7	4	4	-
Check/adjust/replace printhead (procedures 55IMP15, 16, and 17).	-	-	-	-	6	5	-	-	-
Check/replace format tape (procedure 55IMP5) and format reader (procedures 55IMP15 and 55IMP17).	-	-	1	-	-	-	-	-	-
Check cables between driver board and printhead (procedure 55IMP14).	-	-	-	-	5	4	-	-	-
Replace line start board (procedure 55IMP10).	-	6	-	4	7	-	-	-	-
Replace character start board (procedure 55IMP11).	-	-	-	5	8	6	-	-	-
Problem not covered in manual. Call for assistance.	-	-	-	-	-	-	-	-	X
Note: After completing any repairs or maintenance, verify that the printer is operational by activating TEST PRINT.									

TABLE 55IMP1. DDLT FOR 55-LPM IMPACT PRINTER (SHEET 3 OF 4)

PRINT QUALITY CHECKS

ASSUME

TEST PRINT operation per sheet 2 of this DDLT completed and resulting printout available for print quality analysis.

CONDITIONS	SITUATIONS									
	1	2	3	4	5	6	7	8	9	10
Is printing dark enough across entire page?	Y	Y	Y	Y	Y	Y	Y	Y	N	OTHER
Is printing density even for each of the seven vertical dots in the 7-horizontal by 7-vertical dot matrix of each character?	Y	Y	Y	Y	Y	Y	Y	N	-	
Are the dots which compose each character evenly spaced from each other horizontally?	Y	Y	Y	Y	Y	Y	N	-	-	
Are adjacent characters uniformly spaced from each other horizontally across entire page?	Y	Y	Y	Y	Y	N	-	-	-	
Is the leftmost column of characters uniformly aligned on the left margin?	Y	Y	Y	Y	N	-	-	-	-	
Are the 132 columns of characters uniformly aligned one under the other down entire page?	Y	Y	Y	N	-	-	-	-	-	
Is spacing between lines of characters even/proper down entire page?	Y	Y	N	-	-	-	-	-	-	
Are 132 characters printed in each line?	Y	N	-	-	-	-	-	-	-	

ACTIONS	SEQUENCE									
Print quality checks OK. Perform remaining printer checks, sheet 4 of this DDLT.	X	-	-	-	-	-	-	-	-	-
Check/adjust forms density control lever (see paper loading procedure 55IMP3).	-	-	-	-	-	-	-	1	1	-
Check for warn out ribbon and replace if necessary (see ribbon changing/ loading procedure 55IMP4).	-	-	-	-	-	-	-	2	2	-
Check format tape for correct punching or for worn format tape; replace if necessary (procedure 55IMP5).	-	-	1	-	-	-	-	-	-	-
Check/adjust printhead alignment with platen (procedure 55IMP15); replace printhead assembly if necessary (procedure 55IMP17).	-	-	-	-	-	-	-	3	3	-
Check/adjust ribbon tracking (procedure 55IMP15).	-	-	-	-	-	-	-	4	4	-
Check/adjust drive belts for clutch and printhead (procedure 55IMP15); replace if necessary (procedure 55IMP17).	-	3	-	1	2	1	1	-	-	-
Check/adjust code disc assembly (procedure 55IMP15); replace parts if necessary (procedure 55IMP17).	-	-	-	2	4	2	2	-	-	-
Check/adjust line start and character start synchronization (procedure 55IMP16); replace parts as necessary (procedure 55IMP17).	-	2	-	3	3	3	3	-	-	-
Check/adjust format reader and paper motion system (procedure 55IMP15); replace parts as necessary (procedure 55IMP17).	-	-	2	-	-	-	-	-	-	-
Check/adjust dashpot to prevent printhead assembly rebounding on returning home (procedure 55IMP15); replace worn out parts as necessary (procedure 55IMP17).	-	-	-	-	1	-	-	-	-	-
Check/adjust end-of-line switch (procedure 55IMP15), replace parts as necessary (procedure 55IMP17).	-	1	-	-	-	-	-	-	-	-
See detailed field service manual and parts manual (see preface) and check/ adjust/replace until fault is found (procedure 55IMP15, 16, and 17).	-	4	3	4	4	4	4	5	5	-
Problem not covered in manual. Call for assistance.	-	-	-	-	-	-	-	-	-	X
Note: After completing any repairs or maintenance, verify that the printer is operational by activating TEST PRINT.										

TABLE 55IMP1. DDLT FOR 55-LPM IMPACT PRINTER (SHEET 4 OF 4)

PRINTER/CRT INTERFACE CHECKS

ASSUME

Power is on at the printer and all printer switch operations (including TEST PRINT) check OK per preceding sheets of this table. Printer input/output cable connected either to keyboard display PERIPHERAL CONNECTOR and keyboard display terminal is operational.

CONDITIONS	SITUATIONS 1	2	3
Do the impact printer test portion of procedure TS6 from the step where the START/STOP switch is pressed to light the switch indicator up to the end of the impact printer test. Assure that keyboard switches are set per beginning of printer checkout steps and that rear panel TEST/NORMAL switch of display is in TEST position. After these test steps, use keyboard REPEAT and character key to print several print lines (132 characters a line). Does printer perform all checks properly?	Y	N	OTHER
Caution: Do not allow a printer to continuously print adjacent columns for more than 5 minutes maximum at a time or solenoid assemblies will overheat and be damaged.			

ACTIONS	SEQUENCE		
Printer works OK. Return to table TS1.	X	-	-
Check input/output cable at printer and at other end.	-	1	-
Open logic chassis panel (procedure 55IMP6) and observe for proper printed circuit board seating in the printer logic rack (especially check RS-232-C interface board).	-	2	-
Observe for proper connections from printer logic module to input/output connector.	-	3	-
Remove RS-232-C interface board (procedure 55IMP7), and check that all switches/jumpers are properly set for this subsystem (procedure 55IMP8). Reinstall RS-232-C interface board (procedure 55IMP7).	-	4	-
Replace RS-232-C interface board (procedure 55IMP7) with a new board making sure new board has proper switch/jumper settings for this subsystem (procedure 55IMP8).	-	5	-
Replace common controller board (procedure 55IMP7).	-	6	-
See detailed field service manual and parts manual (see preface) and check/adjust/replace until fault found (procedure 55IMP15, 16, and 17).	-	8	-
Replace LSI equivalent board (procedure 55IMP7).	-	7	-
Problem not covered in manual. Call for assistance.	-	9	X
Note: After completing any repairs or maintenance, verify that the subsystem is operational by rerunning test mode.			

55-LPM IMPACT PRINTER, CORRECTIVE MAINTENANCE PROCEDURES – GENERAL

The following pages identify procedures referenced either from table 55IMP1, DDLT for Impact Printer, or elsewhere within this manual. In addition, other procedures which may serve useful are identified. This impact printer has two companion manuals (see preface), which cover the detailed remove/replace procedures, adjustments, and all parts data identification. Whenever such procedures are identified on the following pages, a reference appears to send the reader to the proper procedural details in the companion field service manual.

For the 55-LPM impact printer, information provided in this hardware maintenance manual, plus detailed data in the companion field service and parts manuals, allows troubleshooting down to a very detailed level. This is in keeping with the policy of being able to perform detailed troubleshooting and repair at the customer site printer equipments. This philosophy differs with the modular repair level approach used for small, lightweight printers such as the NIP.

Generally, it is at the discretion of the customer engineer making a service call to decide at which level adjustments or remove and replace procedures should be done for the best overall results at any particular site. This decision must take into consideration the availability of possible required spare parts, and availability/type of test equipment and tools which are required for different level adjustment/replacement procedures.

The two companion manuals support maintenance down to the level of internal clutch parts, PC board components, and complex adjustments which require special tools/talents. The maintenance philosophy of this hardware maintenance manual is to limit the detailed level of maintenance for a printer when used as a peripheral device with a display terminal. On the site, this means maintaining certain areas of the printer at a higher level than may be possible by using all information available in the manuals. Specifically, these limitations are defined as follows.

- Do not break the printhead assembly down to the solenoid level, etc., nor attempt to adjust extension of the stylus pins (print wire ends). This means do not loosen solenoid assemblies to adjust their armature position on the stylus pins. Rather, remove/replace the entire printhead assembly (procedure 55IMP7).

- On the hammer driver circuit board, replace the fuses only (procedure 55IMP12), otherwise replace the whole board (procedure 55IMP9).

- Repair any of the four logic boards in the logic chassis only by replacing them at the board level (procedure 55IMP9) except for on-board fuses (procedure 55IMP12).

- Any/all light sensors should be replaced only at their board level (see procedures 55IMP10 and 55IMP11).

Procedure 55IMP1 – Turning On Impact Printer Power

To turn power on the impact printer, perform the following:

1) Verify ac power cord connected to proper power from site outlet.

2) Verify paper forms installed/aligned (procedure 55IMP3).

3) Verify ribbon installed (procedure 55IMP4).

4) Verify format tape installed (procedure 55IMP5).

5) Press ON/OFF switch to ON (switch illuminates when power is on).

6) Press START/STOP switch to START (switch illuminates when in start condition) to place printer online. If offline condition is desired for testing, leave this switch in stop condition (not illuminated).

If desirable to check printer operating capability, place START/STOP switch to STOP (not illuminated) and proceed as follows (if a fault should occur, start troubleshooting at table 55IMP1, DDLT for Impact Printer).

1) Press FORM FEED switch and observe that forms advance one page (as determined by a page sentinel on the format tape channel one).

NOTE

FORM FEED is inoperable when printer is in on-line condition (START/STOP switch illuminated). Also, do not activate FORM FEED switch with the format reader tape off or reader mechanism open because that causes a forms runaway condition (constant paper feeding). To stop such a runaway condition, press ON/OFF switch to OFF (extinguished), close the format reader on a format tape (procedure 55IMP5), and turn power switch to ON (lit) again.

2) Press TEST PRINT switch (illuminated) and observe the Impact Printer TEST PRINT Pattern, shown in figure TS5, prints. Press TEST PRINT switch again to stop this test (switch extinguished).

NOTE

TEST PRINT switch is operable only when printer is not online (START/STOP switch extinguished), the front cover interlock switch is closed, and when no power supply faults exist. If paper forms should run out, TEST PRINT will still operate.

Procedure 551MP2 – Turning Off Impact Printer Power

To turn off printer power, perform the following:

1) Press ON/OFF switch on front panel to off — it should extinguish.

2) If desired to remove all power applied to printer cabinet (such as for moving power supply components or just to be doubly safe when working inside cabinet), disconnect ac power cord from site outlet.

Procedure 551MP3 – Installing/Aligning Paper Forms in Impact Printer

To install/align paper forms in the impact printer, use the following procedure. Select paper forms from those recommended under the heading Impact Printer Forms at the end of this procedure.

1) Turn printer power off (ON/OFF switch), lift front access panel slightly, slide it to front of printer cabinet, and lower access panel carefully to its open hanging position at front of cabinet.

2) Place stack of fanfold forms behind printer, directly below forms feed slot.

3) Insert top form into forms feed slot under tension bars (figure 551MP1) and continue to slide form in until it is visible at front of printer.

4) Stand at front of printer and open left tractor flap. Position form on left tractor feed pins and close tractor flap.

5) Replace front access panel. Using the column guide on panel for forms position reference, slide left tractor for desired left margin on paper (tractors have fairly stiff friction clamps which require firm pressure to release).

6) Open right tractor flap, slide right tractor as necessary to left or right so tractor feed pins fit in right side feed holes of taut, non-skewed paper form, and close right tractor flap.

7) Set Forms Density Control lever according to forms thickness. Move lever toward rear of cabinet for thicker, multiple-part forms and toward front for thin forms. After starting printing, adjust this lever for best print quality.

8) Turn printer on and activate FORM FEED switch to position format tape reader at top of forms position.

9) While pressing Clutch Retractor Lever, use Forms Positioning Knob to advance form to intended first line of print (directly under printhead's present position).

10) Release Clutch Retractor Lever. Forms should be ready for printing.

Impact Printer Forms

Impact printers use fanfolded forms that have sprocket drive holes along each side. For best print quality and printer operation, the forms and ribbons used in impact printers should meet the following general requirements.

The printer will handle standard continuous forms paper with feed holes on each edge, with or without marginal perforations.

The forms may be from 4 to 16.75 in (101.6 to 425 mm) in width including margins, and 3.5 to 18 in (88.9 to 457 mm) long from fold to fold. When using the output paper basket, the forms length is limited to 11 in (279 mm) from fold to fold.

The forms must have sprocket holes punched along both margins 0.25 ±0.03 in (6.35 ±0.76 mm) from the paper edge to the hole center lines. The distance between hole centerlines must be 0.50 ±0.005 in (12.7 ±0.13 mm) nonaccumulative, and the diameter of the holes should be 0.156 ±0.010 in (3.9 to 0.25 mm). Multiple-part forms must be suitably fastened with nonmetallic fasteners. The following list specifies the recommended forms in terms of parts and weights.

Parts	White Sulphite Bond Paper	Carbon Paper
1	15 pound continuous bond (56 g/m^2)	
1	24 pound continuous bond (90 g/m ^{2})	
2 and 3	12 pound continuous bond (45 g/m^2)	8 pound (14 g/m^2)
2 and 3	15 pound continuous bond (56 g/m^2)	8 pound (19 g/m^2)
4 and 5	12 pound continuous bond (45 g/m^2)	6 pound (14 g/m^2)

Procedure 551MP4 – Installing Ribbon in Impact Printer

This procedure describes the various operations required for installing ribbon in the impact printer. Use ribbon and ribbon materials as specified under the heading Impact Printer Ribbon Materials at the end of this procedure.

If the replacement ribbon for the printer comes supplied on a single spool, unload used ribbon from one spool for reuse as follows:

1) Press power ON/OFF switch to OFF and open front access panel.

2) Remove ribbon (on spools) from ribbon path in printer (figure 551MP2).

3) Place spool with most ribbon on right ribbon mandrel (figure 551MP2).

4) Place other spool on stationary rewind mandrel located just behind right ribbon mandrel.

5) Turn printer on.

6) When ribbon stops turning, remove both spools, pull ribbon leader from empty spool, and use empty spool for spool loading procedure which follows.

If the replacement ribbon for the printer comes supplied on a single spool, load it on an empty spool (unload/emptied per preceding steps) for the required second spool as follows:

1) Route ribbon from full spool onto empty spool as shown in figure 551MP3. Wrap ribbon leader over one of arrow-shaped holding clamps on empty spool hub and pull ribbon back into point of arrow of clamp until solidly hooked. Do not pull so hard that clamp at hub bends up. A minimum of 6 in (152.4 mm) of ribbon must exist between point of attachment and reversing eyelet which is imbedded in ribbon end. This is to allow actuating reversing lever next to right mandrel when ribbon is fully unwound from right spool.

2) Wind 5 to 6 turns of ribbon onto empty spool. Ribbon is ready for loading in printer.

To load a ribbon that is already on two spools, refer to figure 551MP2 and perform the following:

1) Place full spool on left ribbon mandrel.

2) Route ribbon around guide rollers making sure it passes through slot in ribbon-reversing sense lever.

3) Route ribbon between ribbon guide and printhead and around front guide roller on printhead.

4) Route ribbon behind rear guide roller on printhead and then all the way right to behind far guide roller.

5) Route ribbon in front of next guide, through slot in ribbon-reversing sense lever, and behind last guide roller.

6) Place empty spool on right ribbon mandrel.

7) Slide printhead all the way to right and allow it to spring back. This should route ribbon beneath tip of clamp on printhead and ribbon should now be ready for printing.

Impact Printer Ribbon Materials

The ribbon used in this impact printer is 0.5 in (12.7 mm) wide by 66 feet (20 m) long and runs on an angle across the printing area in order to print on the full width of the ribbon. The ribbon must have an eyelet located at least 6 in (152 mm) from each end for automatic ribbon reversal. Nylon or silk ribbons only must be used. A single spool ribbon must be attached to an empty spool before installation in the printer. The following are recommended ribbon materials:

Item	CDC Part Number
Ribbon and Spools	95371700
Empty Ribbon Spool	76616500
Cleaning Solvent	Any standard commerical type, i.e., Brief, Formula 409, etc.

Procedure 551MP5 – Installing Format Tape in Impact Printer

This procedure describes installing the required format tape in the impact printer. Without a format tape in place, printer use will result in a forms runaway condition (no control over forms advance). Use format tape and material as specified under the heading Impact Printer Format Tape Materials at the end of this procedure.

1) Press power ON/OFF switch to OFF.

2) Remove format reader housing by pulling it, bottom first, away from printer from left side.

3) Lift brush block tension lever.

4) Thread format tape loop between brush block and drive sprocket making sure that channel 1 is at the inside (see figures 551MP4 and 551MP5). Be certain that tape holes fit neatly over drive sprocket pins.

5) Route the remaining loop of format tape using either path A or path B as shown in figure 551MP4 depending on tape length. Use path B when tension arm cannot take up all slack with tape in path A, or if tension is so extended as to touch housing when tape is in path A.

6) Lower brush block tension lever.

7) Replace format reader housing by pressing it, top first, over framework of format reader from left side. Format tape should be ready for operation.

Impact Printer Format Tape Materials

The format tape used in this impact printer is a standard 1 in (25.4 mm) wide tape with sprocket holes on 0.1 in (2.54 mm) centers (figure 551MP5). The standard format tape (CDC Part No. 76621000) comes with channel 3 (line feed) already punched. Channel 1 should be punched to correspond to the top of forms position. Channel 2 may be punched at any vertical tab desired. The format tape may be any length from 5.5 to 12.5 in (139.7 to 317.5 mm).

The person servicing the customer site is not normally required to supply format tapes to the customer. If a person wishes, properly punched spare format tapes may be brought to the site for test purposes. If, however, tape must be punched at the site, a special Format Tape Punch (CDC Part No. 76657900) must be used along with adhesive Format Tape Splice (CDC Part No. 76628200). The proper use of these items is fully described in the companion field service manual for the impact printer (see preface). The customer may purchase and have on site whatever format tape and punching/splicing equipment/materials are necessary.

Procedure 551MP6 – Opening/Removing Impact Printer Cabinet

To gain access to interior parts/assemblies of the impact printer, open/remove the cabinet as described by the following procedures.

Open/remove the front access panel (to gain access to entire ribbon path and line start circuit board) as follows:

1) Raise front edge of access panel slightly up, carefully slide it toward front of printer until the two retaining tangs (one at the far back on each end of access panel) are fully forward in their slots in upper cabinet, and gently lower access panel until it hangs at front of printer cabinet.

2) Remove panel from cabinet (if desired; for example, in preparation for removing entire cabinet) by lifting panel up again, swinging left side toward back as far as comfortable without jamming it, moving right side of panel toward front and lifting it so right tang lifts out from under cabinet top, and moving entire panel toward the right and front so it lifts off cabinet.

Open the rear logic chassis panel (to gain access to back interior of cabinet including logic chassis, input/output connector, driver board, tractor assembly locks/connector, etc.) as follows:

1) Loosen the four twist-lock fasteners located along top and side of backpanel (which covers entire back of printer cabinet), one quarter turn counter-clockwise.

2) Carefully tilt top of panel back and lower it so it hangs on its retaining chain.

WARNING

Interior of cabinet has hazardous voltage. Exercise extreme caution if power is left on or turn power off and disconnect ac power cord from site outlet.

Remove the entire upper cabinet (to gain access to front interior of cabinet including drive motor, clutch, drive belt, character start assembly, code disc, pulley assembly, etc.) as follows:

1) Open rear logic chassis panel by preceding two steps.

2) Disconnect tractor assembly cable connector on logic chassis backplane board (figure 551MP10).

3) Release tractor assembly by reaching into upper left and right corners of rear panel opening, pressing the two tractor assembly locks, and lifting tractor assembly off. Set tractor assembly aside in a safe place.

4) Grasp upper cabinet firmly on each side and lift straight up to release it from its spring-loaded fasteners. Carefully continue raising cabinet until it clears interior parts and set it aside in a safe place.

Replace any/all of the items removed in this procedure by reversing the steps which removed them.

Procedure 551MP7 – Removing/Replacing Logic Chassis PC Board

To remove PC boards from the logic chassis, perform the following:

1) Press power ON/OFF switch to OFF.

2) Open rear logic chassis panel (procedure 551MP6).

3) Release friction clamp arms holding board (figure 551MP6) in place.

4) Withdraw board from card cage.

To replace PC boards in the logic chassis, perform the following:

5) Press power ON/OFF switch to OFF.

6) If board contains switches and/or jumpers, check the settings/placements (figure 551MP7) per terminal subsystem requirements.

7) Place board in correct logication (figure 551MP6) and carefully slide board in track until board touches connector sockets at back.

8) Carefully draw board into connector sockets by evenly and firmly locking both friction clamps.

Procedure 551MP8 – Checking/Setting Internal Switches and Jumpers

To check/set internal switches and jumpers for the impact printer, proceed as follows:

1) Open rear logic chassis panel (procedure 551MP6).

2) Remove RS-232-C interface board 1A04 (procedure 551MP7).

3) Verify that all switches and jumpers (figure 551MP7) conform to the interface configuration required for correct operation with the keyboard display logic (refer to impact printer installation procedures in associated Operators Guide/Reference Manual; see preface).

4) Replace RS-232-C interface board in slot 1A04 (procedure 551MP7).

Procedure 551MP9 – Removing/Replacing Driver PC Board

To remove the drive PC board 2A01 (figure 551MP15), perform the following:

1) Press power ON/OFF switch to OFF.

2) Open rear logic chassis panel (procedure 551MP6).

NOTE

Before replacing a suspected faulty driver board, inspect the four solenoid fuses on the board (procedure 551MP12). If replacing a faulty fuse solves the problem, do not proceed with replacing the driver board.

3) Reach in through rear panel accessway and remove the two screws from printhead ribbon-cable retainer at lower center of driver board.

4) Carefully pull each of the four connectors from driver board (these are 2J01, 2J02, 2J03, and 2J04 as shown in figure 551MP8) being careful to note/mark which is top/bottom of each connector so proper reconnection is possible.

5) Using a short stubby screwdriver, remove four screws located along bottom of driver board and lift driver board out of cabinet through rear panel accessway.

To replace the hammer driver board, perform the preceding removal steps in reverse order.

Procedure 55IMP10 – Removing/Replacing Line Start PC Board

To remove the line start PC board 3A01 (figure 55IMP15), perform the following:

1) Press power ON/OFF switch to OFF.

2) Open front access panel (procedure 55IMP6).

3) Slide printhead halfway toward right and block it with some nonmetallic object between printhead and left chassis endplate (a thin, hardcover book may be placed, binding down, between printhead guide rods and between printhead and left endplate).

4) Reach down under left end of printhead guide rods and disconnect connector 3J02 from line start board (figure 55IMP10).

5) Using a short stubby screwdriver, remove both screws located diagonally in the middle of line start board and lift board out.

To replace the line start PC board, perform the preceding removal steps in reverse order.

Procedure 55IMP11 -- Removing/Replacing Character Start PC Board

To remove the character start PC board 3A02 (figure 55IMP15), perform the following:

1) Press power ON/OFF switch to OFF.

2) Remove entire upper cabinet (procedure 55IMP6).

3) Disconnect connector 3J04 from character start board (figure 55IMP10).

4) Remove both screws located diagonally in middle of character start board and carefully remove board away from code disc assembly.

To replace the character start board, perform the preceding removal steps in reverse order.

Procedure 55IMP12 – Check/Replace Fuses

Fuses are located in three different functional areas within the impact printer. These locations are: hammer driver board 2A01, power supply board 1A01 in the logic chassis, and (for 50-Hz units only) in each of the four secondary outputs from power transformer 2T01.

Check/replace hammer driver board fuse(s) as follows:

1) Press power ON/OFF switch to OFF.

2) Open rear logic chassis panel (procedure 55IMP6).

3) Carefully observe suspect fuse (figure 55IMP8); if burned out, replace it with a new fuse.

Check/replace power supply board fuse(s) as follows:

1) Press power ON/OFF to OFF.

2) Open rear logic chassis panel (procedure 55IMP6).

3) Observe fuses (figure 55IMP9). Replace if burned out.

Check/replace each fuse in the secondary of 2T01 (figure 55IMP15) in a 50-Hz unit as follows:

1) Press power ON/OFF to OFF.

2) Remove entire upper cabinet (procedure 55IMP6).

3) Observe fuses (figure 55IMP10). Replace if burned out. Identification for these power transformer fuses is as follows:

Top fuse (2F01): 10 A (+28 V dc)
Second fuse down (2F02): 6.25 A (+13 V dc)
Third fuse down (2F03): 1 A (+16 V dc)
Bottom fuse (2F04): 1 A (+24 V dc)

Procedure 551MP13 – Removing/Replacing Internal Cables

To remove any cable with the printer, on either or both ends, proceed as follows:

1) Press power ON/OFF switch to OFF.

2) Refer to internal cable/connector diagrams (figures 551MP11, 12, 13, and 14) for cable general location/routing. See figures 551MP11 and 551MP16 for chassis connector locations.

WARNING

For any cable/wiring on the primary side of the power transformer (2T01), the input power cord must be disconnected from the site power outlet. Also, whenever working near any portion of input power, whether input lines or various terminal blocks/pins, the power cord must be disconnected. It is good practice to always disconnect the input power cord when doing any remove/replace work inside the printer. The exception to this may be removing the slide-out logic chassis circuit cards or other similarly simple procedures which may require only the ON/OFF switch set to OFF. If in doubt, always disconnect the input power cord from the site outlet.

3) Open cabinet as required to gain access to cable (procedure 551MP6).

4) While carefully noting pin orientation/location to enable proper reconnection (mark/tag if required), carefully disconnect desired cable.

5) Remove any/all cable ties which may hold cable in place. Make it a point to remember where such ties were placed for proper retying later.

6) Carefully work entire length of cable (and attached connectors) free from its route and out of printer.

Replace any cable within the printer as follows:

7) Verify having correct cable (see impact printer parts manual identified in preface of this manual).

8) Carefully work cable (and attached connectors) into its proper place (see impact printer parts manual and field service manual, both identified in preface of this manual).

9) Secure as required with cable ties.

10) Carefully reconnect connections properly.

11) Close cabinet and/or apply power (procedure 55IMP1) as desired.

Procedure 55IMP14 – Checking Internal Cables

To check internal cables, perform the following:

1) Open cabinet as required (procedure 55IMP6) to access cable.

2) Visually inspect connections. If loose or open, secure, and if using this procedure from a DDLT, return to the DDLT and check results before proceeding with following steps of this procedure.

3) Disconnect cable connections from both ends of suspected wire(s) (procedure 55IMP13, steps 1 through 4).

4) Carefully inspect connector pins on both ends for possible damage. If damaged pin(s) found, replace pin(s), connector in which pin(s) reside, or entire cable (procedure 55IMP13, steps 4 through 11) – whichever best meets existing spares availability and immediate customer needs. Refer to the impact printer parts manual (see preface) for all parts identification.

5) Using the interconnection diagrams provided in the impact printer field service manual (see preface), do a pin-to-pin continuity check with an ohmmeter or continuity-checking idiot-light.

6) If open wire(s) found, repair if possible/desired (solder loose connection at connector or replace broken wire in bundle) or replace faulty cable with a new one (procedure 55IMP13, steps 4 through 11).

Procedure 551MP15 – Mechanical Checks/Adjustments

A variety of detailed mechanical checks and adjustments may be performed on the impact printer at the customer site. The field service manual (see preface) contains the procedures for such tasks in its Maintenance section. The procedures provided there, which meet the maintenance philosophy for the printer as part of the terminal subsystem, are as follows:

- Belt Tension
- Clutch Assembly
- Ribbon Tracking
- Printhead (except printwire ends adjustment)
- Code Disc Assembly
- Paper Motion System
- Format Reader Brush
- Dashpot
- Ribbon Reversing Switch
- Out of Paper Switch
- Clamp Lever (tractor)
- End of Line Switch

When it appears necessary to perform any of these checks/adjustments, do so using the tools and materials specified in the procedures and listed at the beginning of the Maintenance section in the field service manual.

Procedure 551MP16 – Electrical Checks/Adjustments

A few electrical checks and adjustments may be performed on the impact printer at the customer site. The field service manual (see preface) contains the procedures for such tasks in the Maintenance section. When it appears necessary to perform any of these checks/adjustments, do so using the tools and materials specified in the procedures (and listed at the beginning of the Maintenance section in the field service manual). The electrical check/adjustment procedures provided there, which meet the maintenance philosophy for the printer as part of a terminal subsystem, are as follows:

- +5-V dc Output Voltage Adjustment
- Line Start and Character Start Synchronization (oscilloscope required)
- Character Firing Time and Width Adjustment (oscilloscope required)

Procedure 551MP17 – Parts Replacement

The field service manual (see preface) contains the procedures for replacing many subassembly parts within the impact printer. These are in addition to the remove/replace procedures given preceding in this section. A list of these parts replacement procedures follows. When it appears necessary to perform any of these replacements, do so using the tools and materials specified in the procedures (and listed at the beginning of the Maintenance section in the field service manual). The replacement procedures provided there, which meet the maintenance philosophy for the printer as part of a terminal subsystem, are as follows:

CAUTION

When removing/replacing any assembly/part, always, as a minimum, press power ON/OFF switch to OFF. This prevents mechanism motion and also prevents electrical arcing when disconnecting circuits. If working near or replacing/disconnecting any input power circuits, always disconnect the input power cord from the site power outlet. It is good practice to always disconnect the input power cord whenever working on any of the circuits within the printer.

- Drive Motor
- Intermediate Pulley Assembly
- Clutch Drive Mechanism
- Right Ribbon Mechanism
- Support Shaft Assembly
- Dashpot Assembly
- Printhead Disassembly (removal part only, disassembly not recommended at customer site)
- Code Disc Pulley Assembly
- Left Ribbon Assembly
- Paper Motion System
- Format Reader Brush

- Format Reader Brush Block
- Format Reader Disassembly
- Platen Removal
- Cooling Fan Assembly

To replace items not included either in the preceding list or in the preceding procedures in this section (ON/OFF circuit breaker switch, power transformer, various backplane components, etc.) refer to the impact printer parts manual (see preface) for parts identification and disassembly/assembly drawings. Use the tools and materials specified at the beginning of the Maintenance section in the field service manual (see preface) and proceed to disassemble (remove) and replace the necessary item according to the parts drawings.

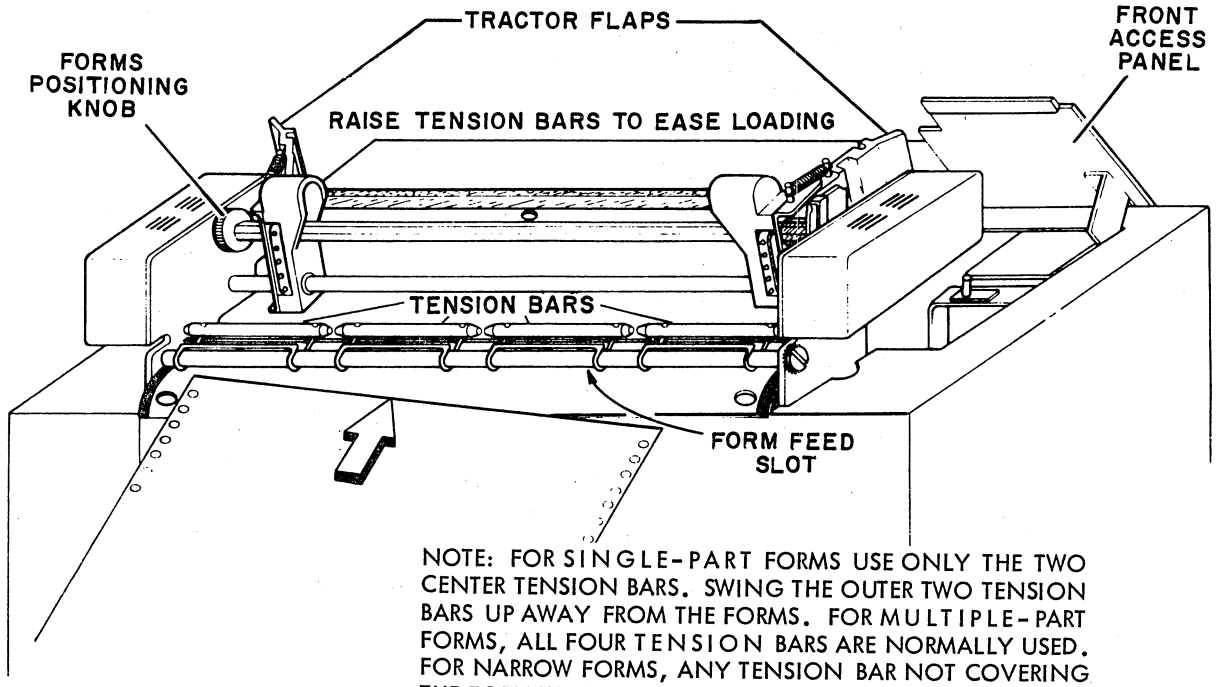

NOTE: FOR SINGLE-PART FORMS USE ONLY THE TWO CENTER TENSION BARS. SWING THE OUTER TWO TENSION BARS UP AWAY FROM THE FORMS. FOR MULTIPLE-PART FORMS, ALL FOUR TENSION BARS ARE NORMALLY USED. FOR NARROW FORMS, ANY TENSION BAR NOT COVERING THE FORM WITH AT LEAST HALF OF ITS WIDTH SHOULD BE LIFTED. IF FORMS TEAR AT THE SPROCKET HOLES, TENSION BAR SHOULD BE LIFTED UNTIL THE TEARING IS ELIMINATED.

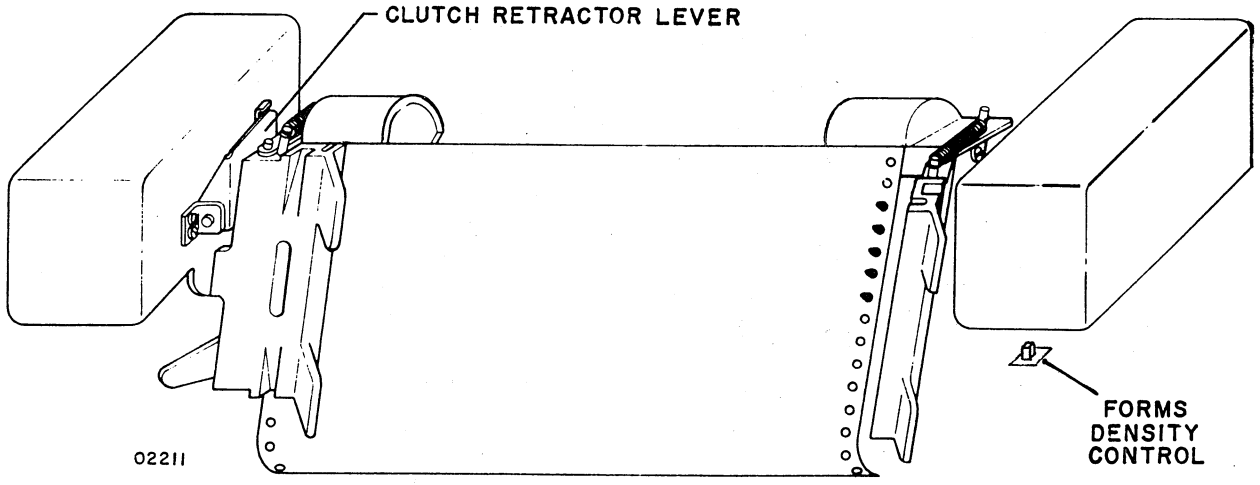

Figure 551MP1. Forms Installing/Aligning in Impact Printer

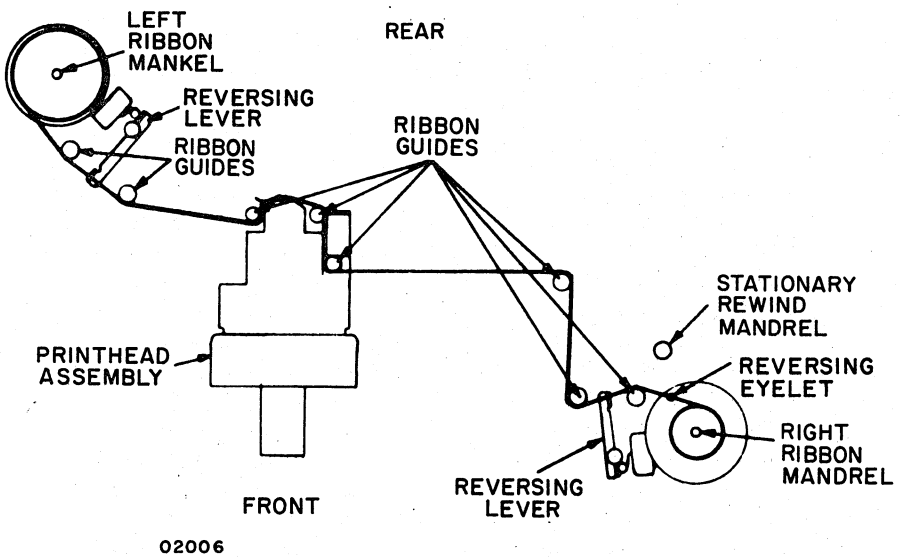

Figure 551MP2. Ribbon Path in Impact Printer

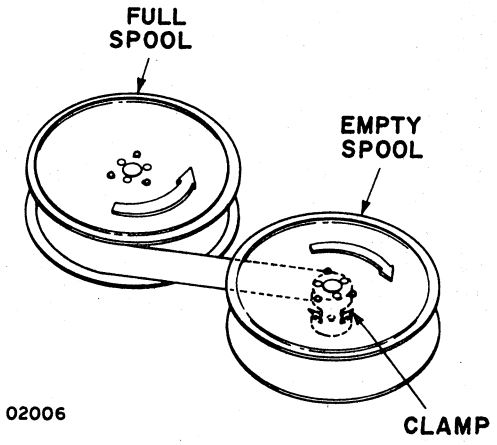

Figure 551MP3. Ribbon Positioning on Spools

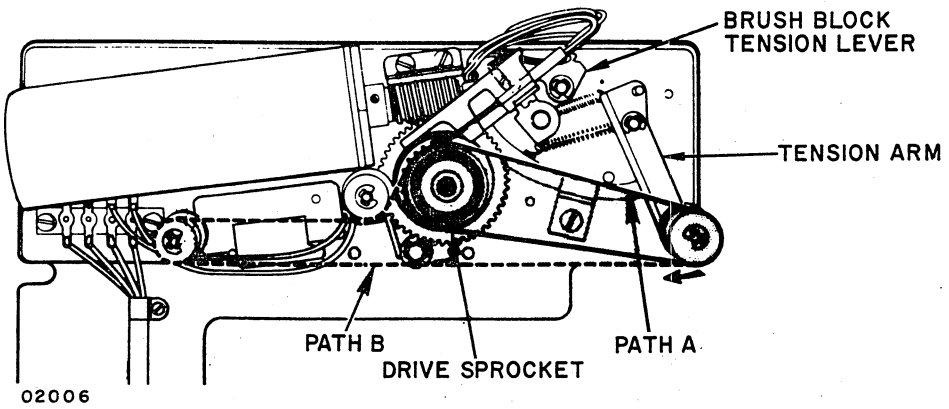

Figure 551MP4. Format Tape Path in Impact Printer

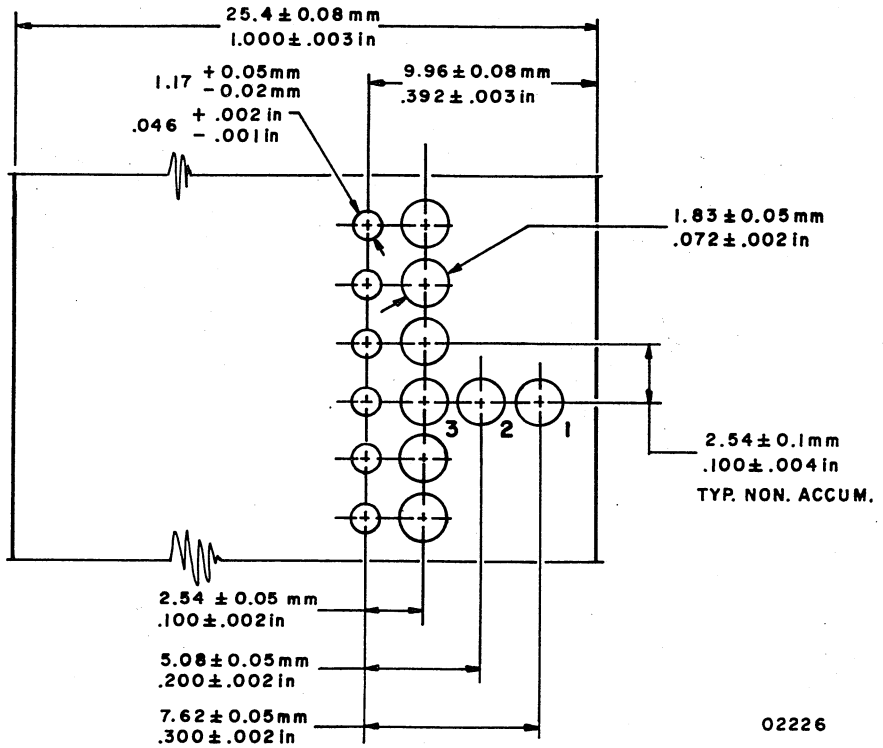

Figure 551MP5. Format Tape Characteristics

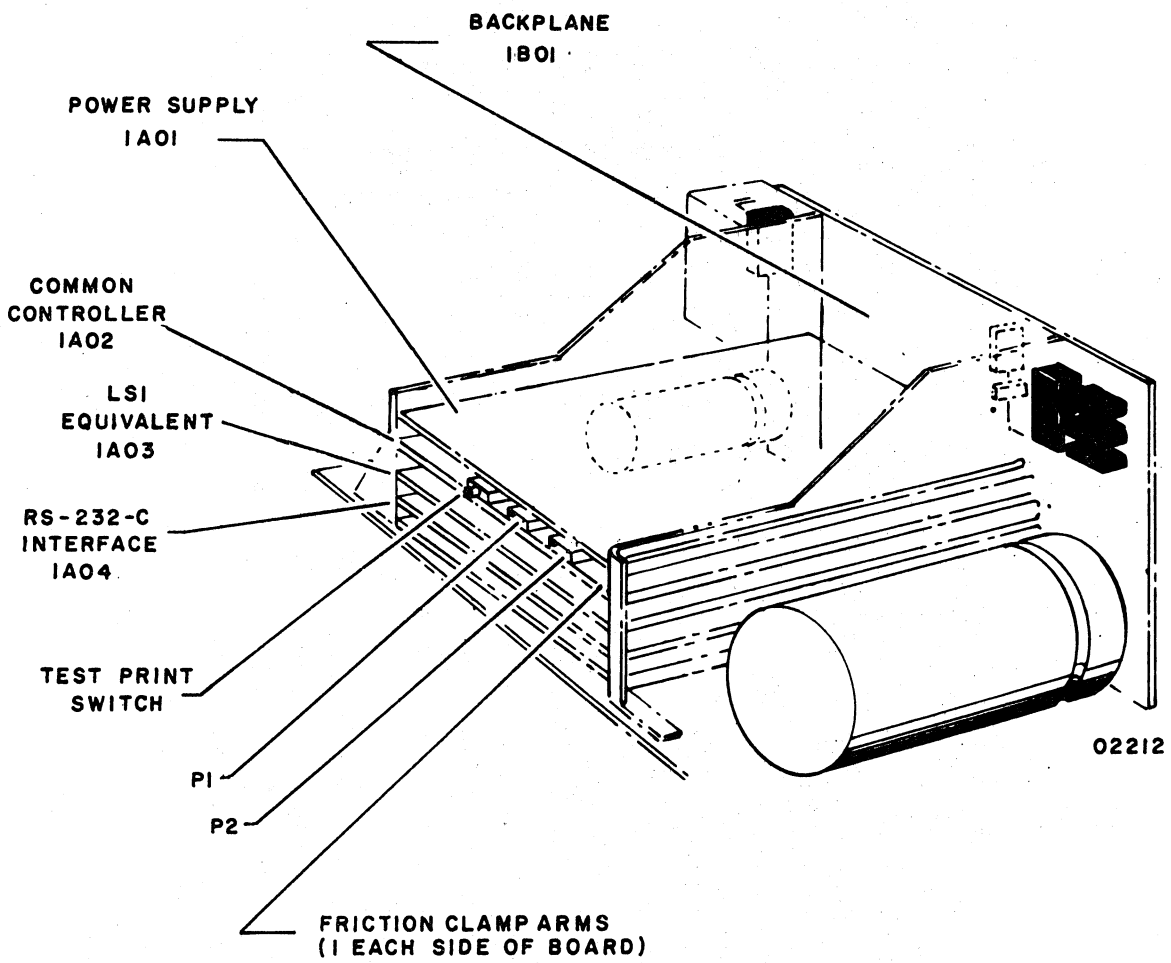

Figure 551MP6. Logic Chassis Board Locations

	REC CLOCK TIME 416 USEC	REC CLOCK TIME 202 USEC	REC CLOCK TIME 104 USEC	REC CLOCK TIME 52 USEC	REC CLOCK TIME 35 USEC	REC CLOCK TIME 26 USEC	REC CLOCK TIME 13 USEC	REC CLOCK TIME 6.5 USEC													
	BAUD RATE SELECTION 150	BAUD RATE SELECTION. 300	BAUD RATE SELECTION 600	BAUD RATE SELECTION 1200	BAUD RATE SELECTION 1800	BAUD RATE SELECTION 2400	BAUD RATE SELECTION 4800	BAUD RATE SELECTION 9600	EVEN PARITY	ODD PARITY	NO PARITY	5 DATA BITS	6 DATA BITS	7 DATA BITS	8 DATA BITS	BUFFER OVERFLOW	AUTO ANSWERING	REVERSE CHANNEL MARK	REVERSE CHANNEL SPACE	AUDIBLE ALARM OUT OF PAPER	AUDIBLE ALARM BEL CODE
J01																				X	
J02																			X		
J03																		X			
J04																X					
J05																	X				
J06																					X
SW1-1	ON	OFF	OFF	OFF	OFF	OFF	OFF	OFF													
SW1-2	ON	ON	OFF	OFF	ON	OFF	OFF	OFF													
SW1-3	OFF	ON	ON	OFF	OFF	OFF	OFF	OFF													
SW1-4	OFF	OFF	ON	ON	OFF	OFF	ON	OFF													
SW1-5	ON	ON	ON	ON	ON	OFF	ON	OFF													
SW1-6	ON	ON	ON	OFF	OFF	OFF	OFF	OFF													
SW1-7	ON	ON	OFF	OFF	ON	ON	OFF	ON													
SW1-8	ON	OFF	OFF	ON	OFF	ON	ON	ON													
SW2-1									ON	ON	OFF										
SW2-2									OFF	ON											
SW2-3												ON	ON	OFF	OFF						
SW2-4												ON	OFF	ON	OFF						
SW2-5	ON	ON	ON	ON	OFF	ON	OFF	OFF													
SW2-6	OFF	OFF	OFF	OFF	ON	OFF	ON	ON													
J07												X	X	X							

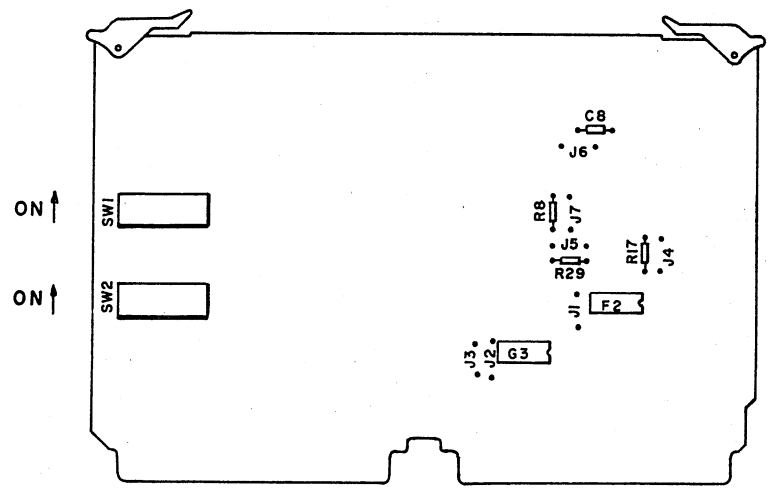

NOTES:

1) TO USE THE PRINTER ON OTHER BAUD RATES THAN SHOWN ABOVE, THE FOLLOWING FORMULA CAN BE USED

$$\text{LOAD VALUE IN DECIMAL} = 256 - \left(\frac{1}{32(\text{BAUD RATE})A}\right)$$

WHERE:

$A = 1 \times 10^{-6}$ FOR SWITCH 2-5 CLOSED AND 2-6 OPEN

$A = 0.25 \times 10^{-6}$ FOR SWITCH 2-6 CLOSED AND 2-5 OPEN

THE LOAD VALUE IN DECIMAL MUST THEN BE CONVERTED INTO BINARY. THEN, THAT VALUE IS LOADED INTO THE SWITCHES.

2) SWITCHES 2-5 AND 2-6 CAN NEVER BE CLOSED OR OPEN AT THE SAME TIME. IF EITHER OF THESE OCCURS, EITHER A WRONG FREQUENCY OR NO FREQUENCY IS SUPPLIED TO THE BAUD RATE SELECTOR.

02290-1

Figure 551MP7. Internal Switches and Jumpers (RS-232-C Interface Board)

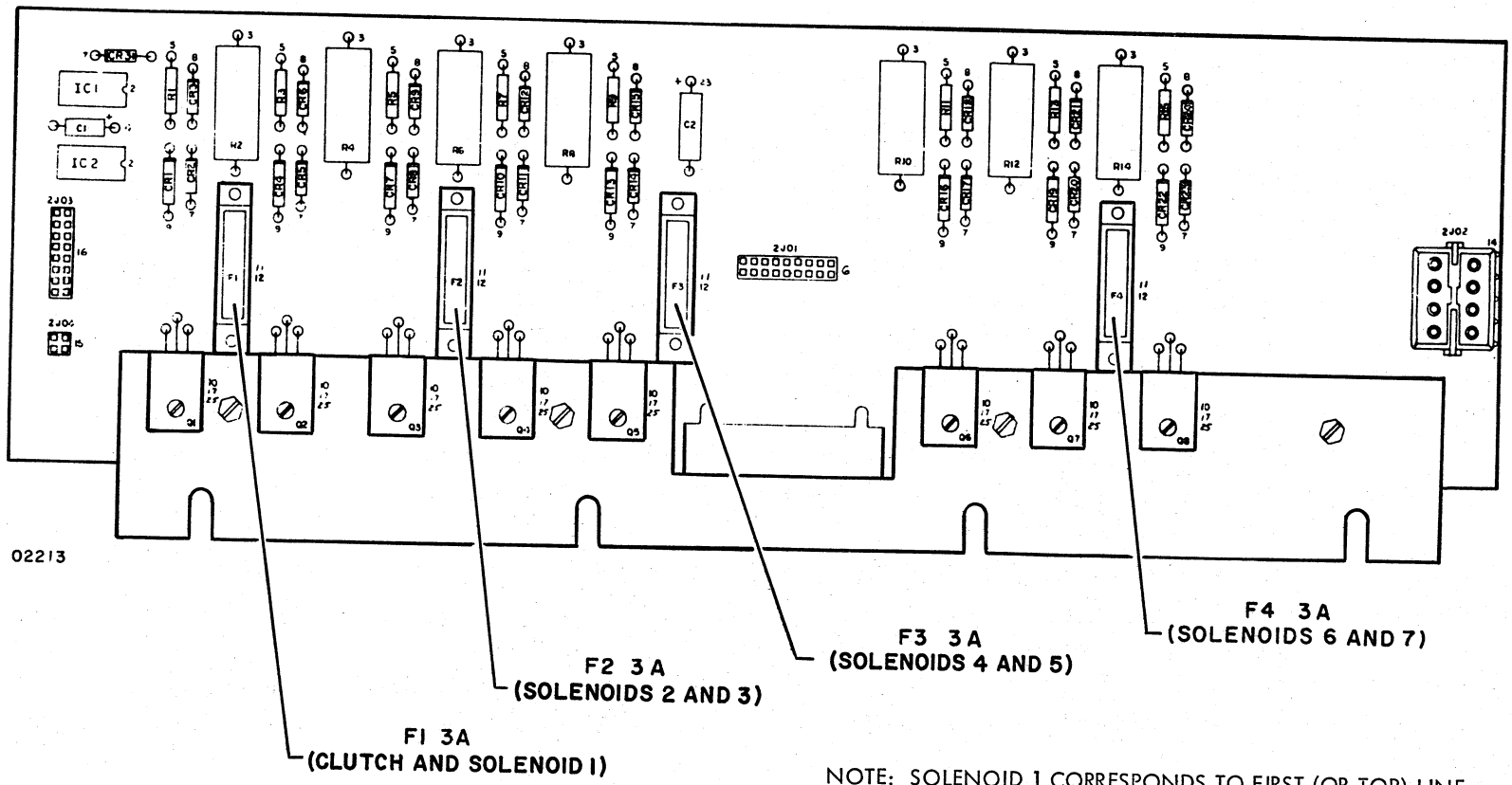

NOTE: SOLENOID 1 CORRESPONDS TO FIRST (OR TOP) LINE OF DOTS FOR EACH CHARACTER, SOLENOID 2 IS THE SECOND, SOLENOID 3 THE THIRD ETC., WITH SOLENOID 7 DRIVING THE SEVENTH LINE OF DOTS (BOTTOM).

Figure 551MP8. Solenoid Driver Board with Fuse Identification

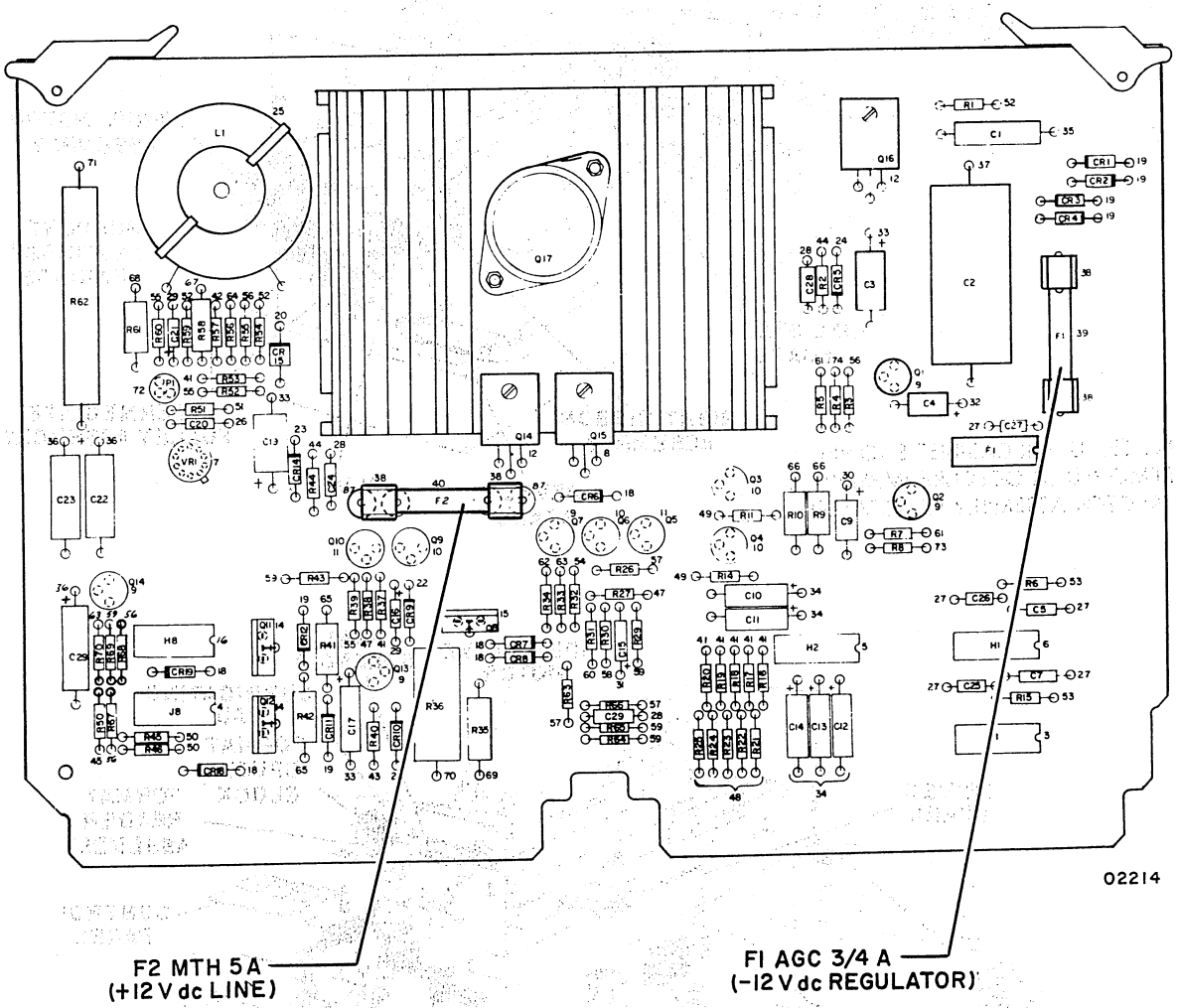

Figure 551MP9. Power Supply Board with Fuse Identification

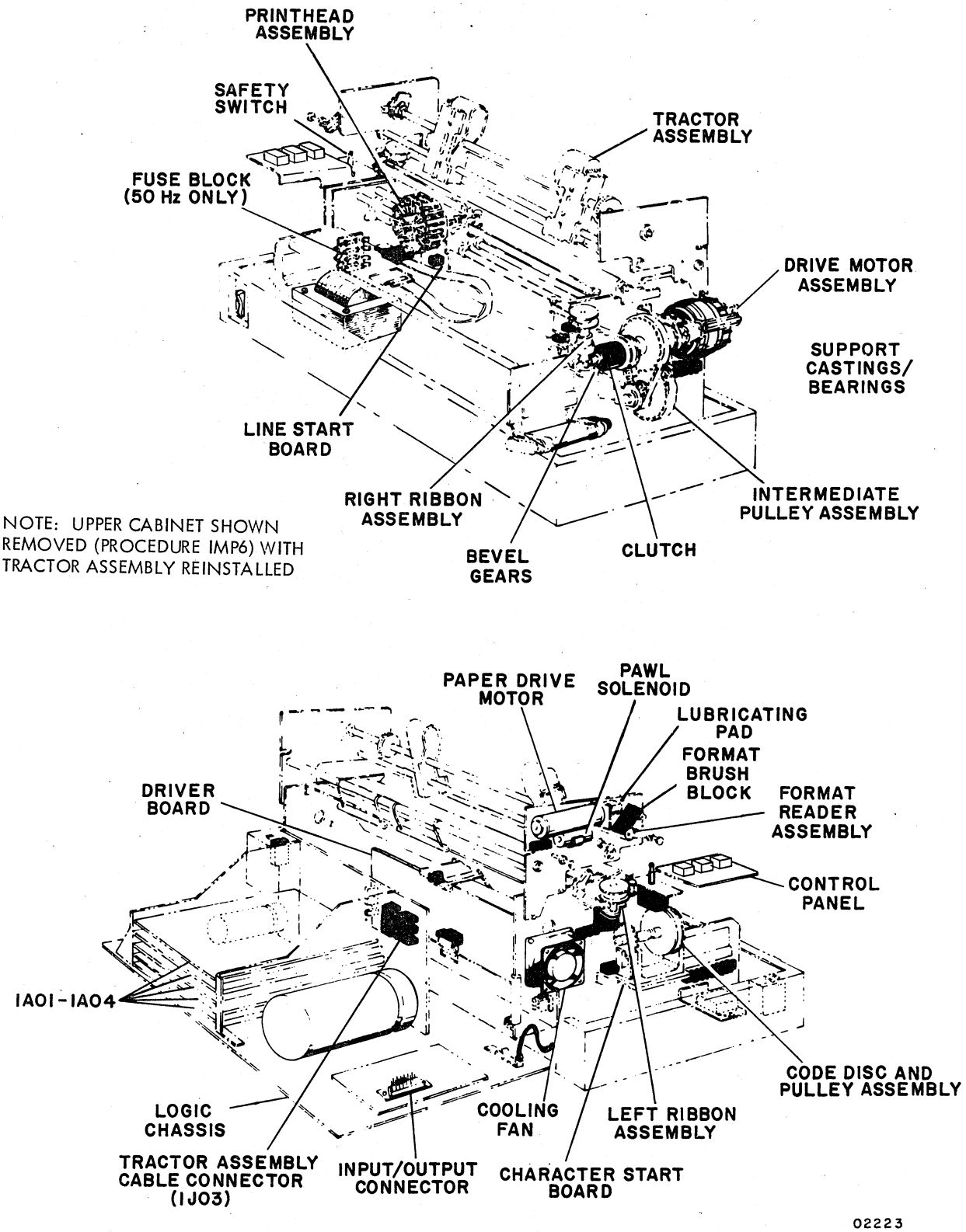

Figure 551MP10. Impact Printer Major Assemblies

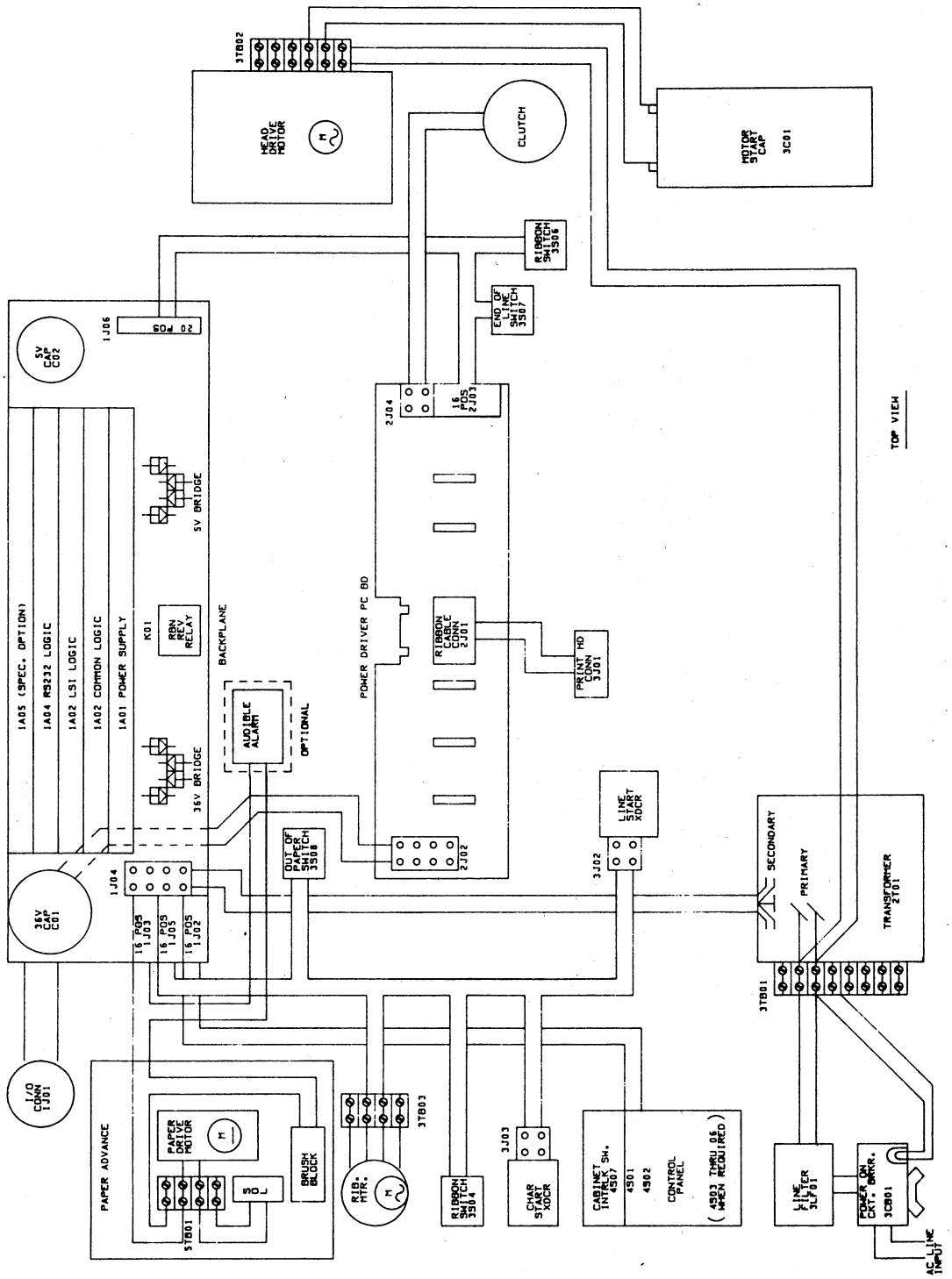

Figure 551MP11. Impact Printer Internal Connectors

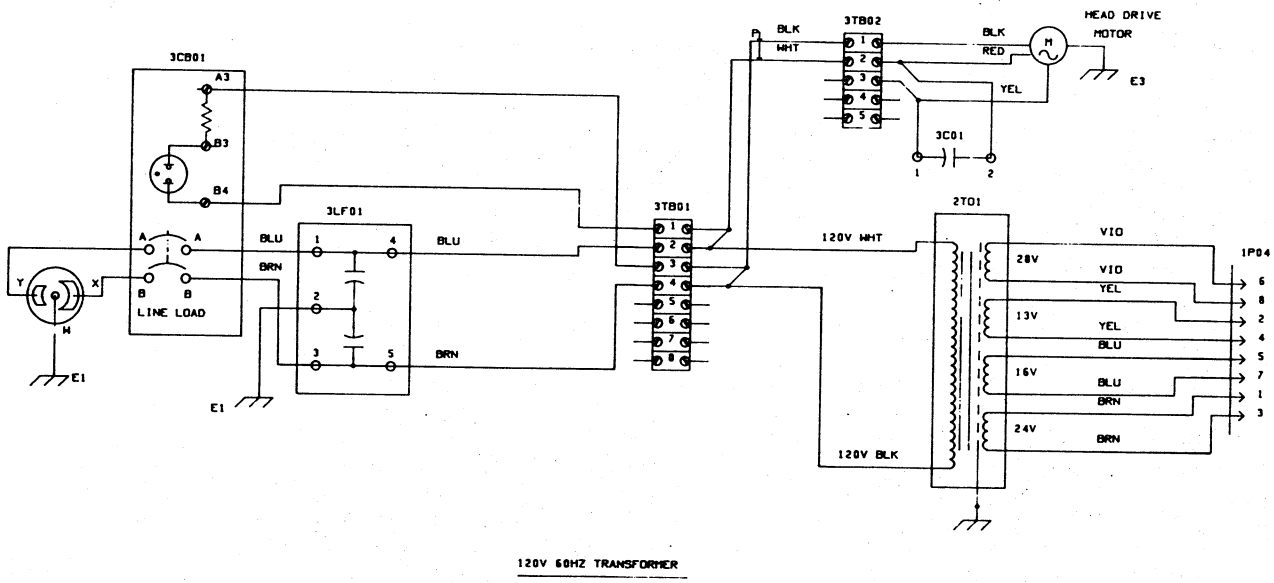

Figure 55IMP12. 60-Hz AC Distribution

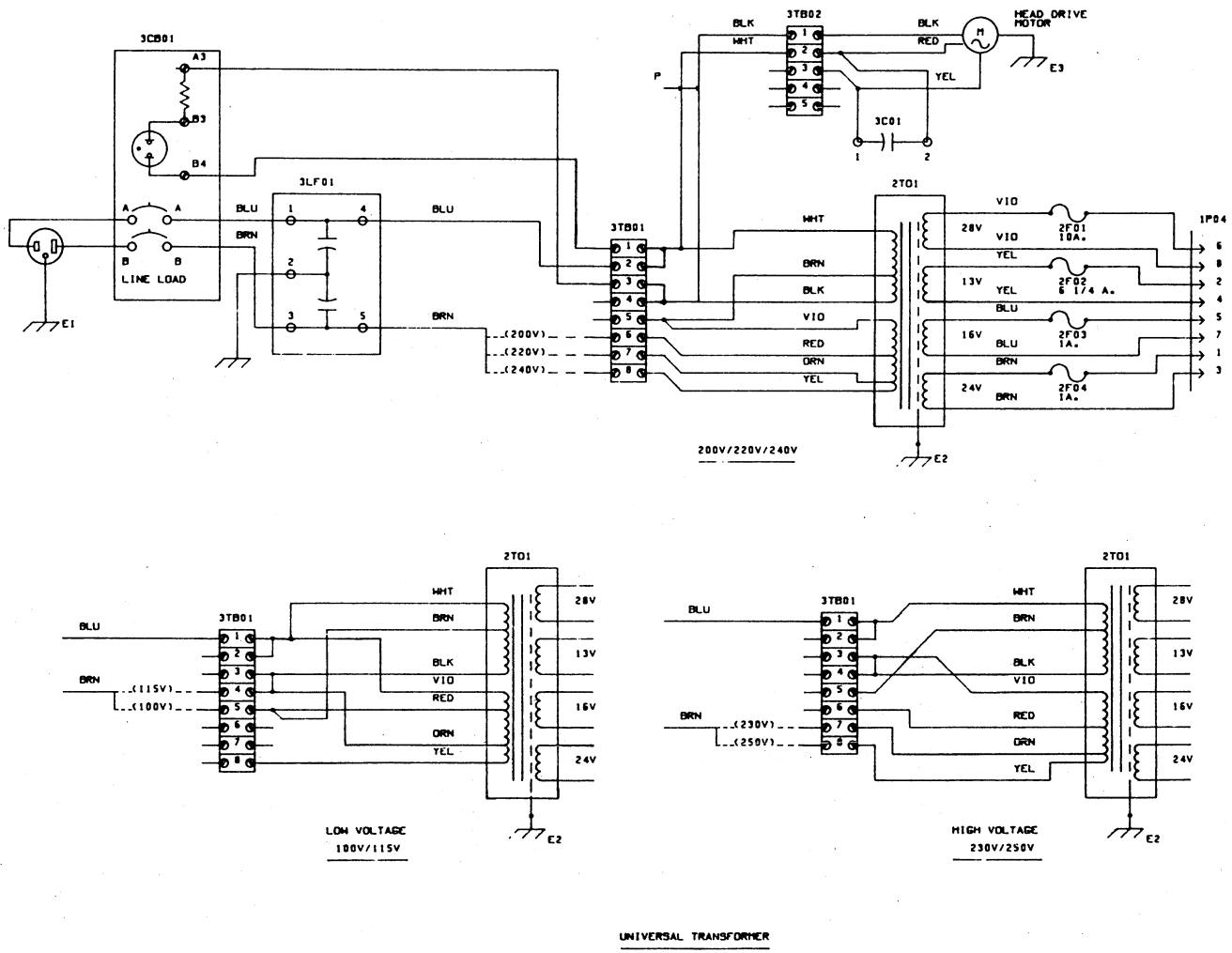

Figure 55IMP13. Universal AC Distribution

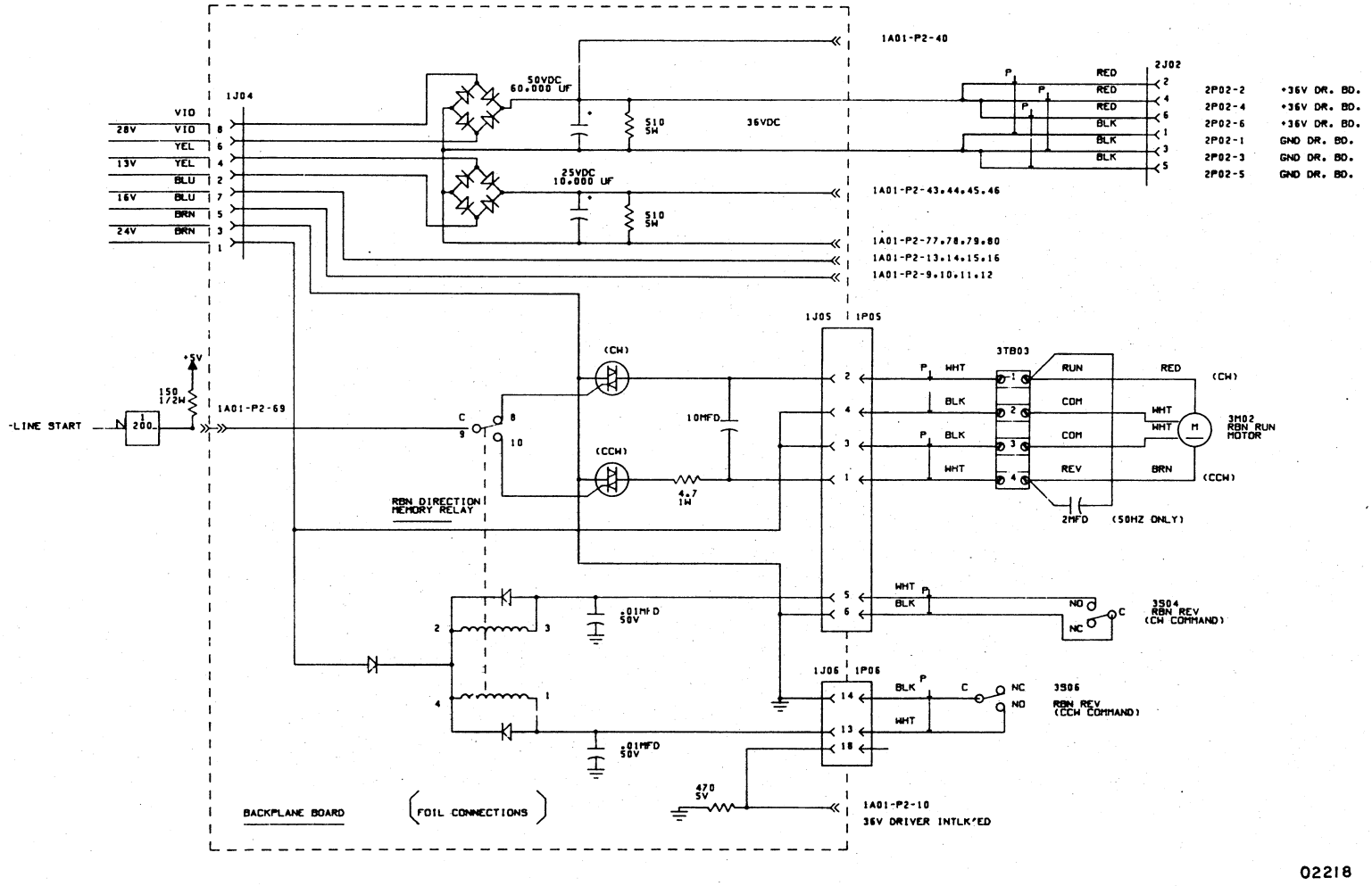

Figure 55IMP14. DC Distribution and Ribbon Logic

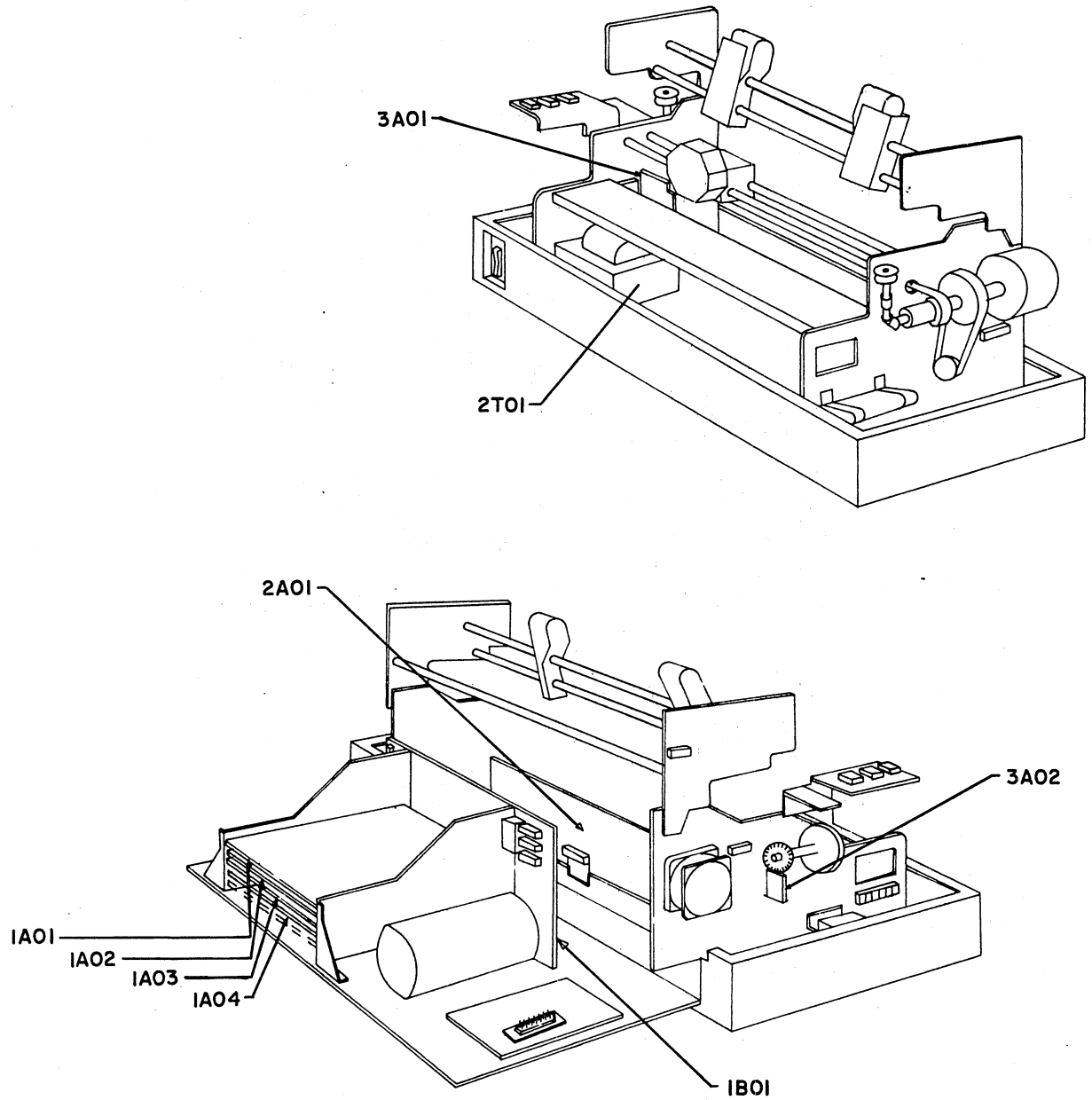

Figure 551MP15. Configuration Drawing

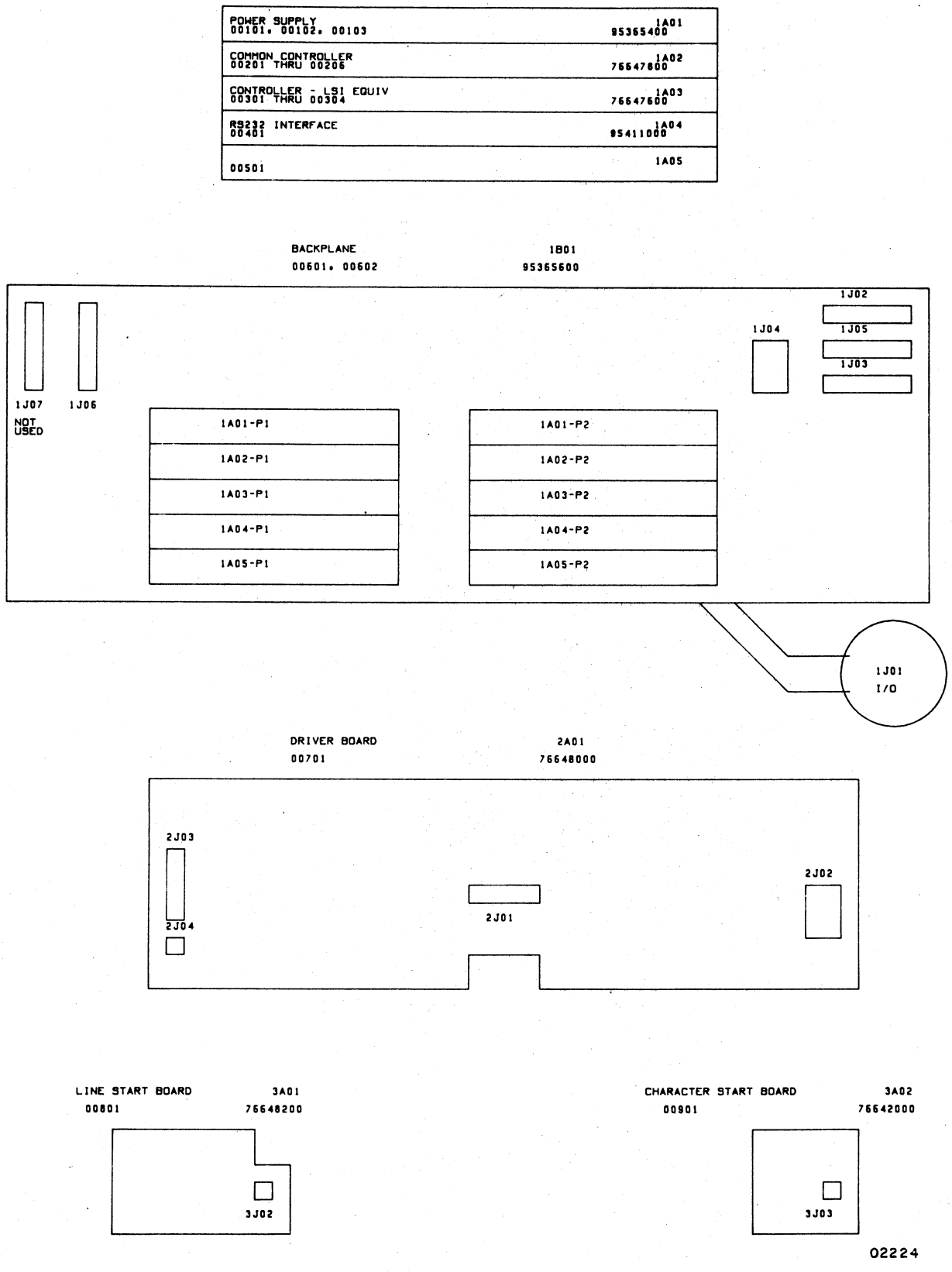

Figure 551MP16. Chassis Map

TABLE 70IMP1. DDLT FOR 70-LPM IMPACT PRINTER

POWER ON AND EXTERNAL SWITCH CHECKS (EXCLUDING TEST PRINT)

ASSUME

Entry from crt DDLTs or malfunction that indicates only printer is at fault. Printer installed properly. Paper and ribbon loaded in printer (procedures 70IMP2 and 70IMP3) and printer ON/OFF circuit breaker pressed to ON.

CONDITIONS	SITUATIONS									
	1	2	3	4	5	6	7	8	9	10
Is ON/OFF circuit breaker lamp lighted?	Y	Y	Y	Y	Y	Y	N	N	-	
If fan motor running?	Y	N	Y	Y	Y	Y	N	Y	-	O
Load format tape (procedure 70IMP4). Does it load OK?	Y	-	N	Y	Y	Y	-	-	-	T
Press FORM FEED switch on printer. Do forms advance properly?	Y	-	-	N	N	Y	-	Y	-	H
Does forms runaway occur (continuous form feeding) after pressing FORM FEED switch? (If yes, stop runaway by turning printer power off.)	-	-	-	N	Y	-	-	-	-	E
Press START/STOP switch. Does its lamp light?	Y	-	-	-	-	N	-	Y	-	R
Remove printer front cover and move printhead from side to side. Does ribbon advance as printhead is moved?	Y	-	-	-	-	-	-	-	N	

ACTIONS	SEQUENCE									
Go to sheet 2 and perform test print.	X	-	-	-	-	-	-	-	-	-
Ensure front cover is actuating (pressing down) interlock switch, or that interlock switch is pulled up if front cover is removed.	-	-	-	-	-	1	-	-	-	-
Remove all cabinet covers (procedures 70IMP5).	-	1	2	2	2	3	1	1	2	-
Check internal cables/connections (figure 70IMP14 and procedure 70IMP11).	-	2	-	3	3	4	2	-	-	-
See fault isolation checks under Printer Does Not Power On heading in printer manual.* Also check power transformer while doing these checks (see diagrams in printer manual).	-	-	-	-	-	-	3	-	-	-
Replace fan (reference procedure in printer manual).*	-	3	-	-	-	-	-	-	-	-
If paper moved, check to ensure correct punching of channel 1 on format tape. Also check that tape has no more than 176 sprocket holes.	-	-	1	1	1	-	-	-	-	-
Check/replace fuses (procedure 70IMP10).	-	-	3	4	4	-	-	-	-	-
Check FORM FEED switch for continuity (see diagrams in printer manual).*	-	-	-	5	-	-	-	-	-	-
See fault isolation checks under No Paper Motion In Start Mode heading in printer manual.* Refer to procedure 70IMP6 if board replacement is necessary.	-	-	-	6	-	-	-	-	-	-
Check START/STOP switch for continuity (see diagrams in printer manual).*	-	-	-	-	-	5	-	-	-	-
See fault isolation checks under Start Lamp Does Not Come On When Start Switch is Depressed heading in printer manual.* Refer to procedures 70IMP10 or 70IMP6, 70IMP7, or 70IMP8 if fuse or board replacement is necessary.	-	-	-	-	-	6	-	-	-	-
See fault isolation checks under Electronic Vertical Format Unit Does Not Load heading in printer manual.* See procedures 70IMP6 or 70IMP8 if board replacement is necessary.	-	-	4	-	5	-	-	-	-	-
Check/replace lamp in appropriate switch. See printer manual for diagrams/procedures.*	-	-	-	-	-	2	-	2	-	-
Replace vertical transducer board (procedure 70IMP8).	-	-	-	-	6	-	-	-	-	-
Replace RS-232 interface board (procedure 70IMP6).	-	-	-	7	-	-	-	-	-	-
Check/replace ribbon (procedure 70IMP3).	-	-	-	-	-	-	-	-	1	-
Check/replace ribbon drive cards (printer manual).*	-	-	-	-	-	-	-	-	3	-
Call for assistance.	-	-	5	8	7	7	4	-	4	X

Note: *Indicates printer field service and reference manual listed in preface.

TABLE 70IMP2. DDLT FOR 70-LPM IMPACT PRINTER

TEST PRINT

ASSUME

Power on and external switch checks of sheet 1 of this DDLT ran OK.

CONDITIONS	SITUATIONS							
	1	2	3	4	5	6	7	8
With START/STOP switch extinguished (offline), press TEST PRINT switch. Does printer produce print pattern as shown in figure 70IMP7?	Y	N	N	N	N	N	N	OTHER
Are forms feeding correctly?	Y	N	N	Y	Y	Y	Y	
Is printhead movement correct?	Y	N	Y	N	Y	Y	Y	
Is there any printout?	Y	N	-	-	N	Y	Y	
Are all portions of all characters printed?	Y	-	-	-	-	N	Y	
Is each character printed the proper character?	Y	-	-	-	-	-	N	
ACTIONS	**SEQUENCE**							
Go to sheet 3 and perform print quality checks.	X	-	-	-	-	-	-	-
Remove all cabinet covers (procedure 70IMP5) and check seating of PC board connectors.	-	1	1	1	2	2	1	-
Replace needle driver board (procedure 70IMP7).	-	-	-	-	-	-	3	-
Replace controller/head logic board (procedure 70IMP6).	-	-	4	-	-	-	4	-
Check TEST PRINT switch for continuity (diagrams in printer manual). (See Note 2)	-	2	-	-	-	-	-	-
Check printhead drive belts and pulleys.	-	-	-	2	-	-	-	-
Lift front cover and check seating of printhead connector.	-	-	-	-	1	1	-	-
Check cables/wires to/from TEST PRINT switch (procedure 70IMP11).	-	3	-	-	-	-	-	-
Check cabling between needle driver board and printhead (procedure 70IMP11).	-	4	-	3	3	3	2	-
Replace vertical transducer board (procedure 70IMP8).	-	-	3	-	-	-	-	-
Do fault isolation checks titled Printer Goes Start But Nothing Happens in printer manual. (See Note 2) If required, replace controller/head logic or power supply board (procedure 70IMP6).	-	5	-	4	-	-	-	-
Do Format Reader and Code Disk Synchronization Tests in printer manual. (See Note 2).	-	-	2	-	-	-	-	-
Do fault isolation checks titled Printhead Moves, But Does Not Print in printer manual. (See Note 2). If required, replace needle driver board (procedure 70IMP7) controller/head logic or power supply board (procedure 70IMP6).	-	-	-	5	4	5	-	-
Replace printhead (procedure 70IMP13).	-	-	-	-	5	4	-	-
Call for assistance.	-	6	5	6	6	6	5	X

Note: 1) After completing any repairs, verify printer is operational by pressing TEST PRINT.
2) Field service and reference manual listed in preface.

TABLE 70IMP3. DDLT FOR 70-LPM IMPACT PRINTER

PRINT QUALITY CHECKS

ASSUME

Test print operation per sheet 2 of this DDLT completed and resulting printout available for print quality analysis.

CONDITIONS	SITUATIONS								
	1	2	3	4	5	6	7	8	9
Is printing dark enough across entire page?	Y	Y	Y	Y	Y	Y	Y	N	OTHER
Are all dots in character of uniform density?	Y	Y	Y	Y	Y	Y	N	-	
Are dots which compose each character evenly spaced from each other horizontally across entire page?	Y	Y	Y	Y	Y	N	-	-	
Are columns of characters uniformally aligned one under the other down entire page?	Y	Y	Y	Y	N	-	-	-	
Is spacing between lines of characters even/proper down entire page?	Y	Y	Y	N	-	-	-	-	
In standard pitch (10 CPI), are 132 character positions (including spaces) printed in each line?	Y	Y	N	-	-	-	-	-	
Does printer respond to 10 CPI/16.5 CPI and 6 LPI/8 LPI switch settings?	Y	N	-	-	-	-	-	-	

ACTIONS	SEQUENCE								
Print quality checks OK. Go to sheet 4 and perform remaining printer checks.	X	-	-	-	-	-	-	-	-
Remove all cabinet covers (procedure 70IMP5).	-	1	1	2	1	1	3	3	1
Check that all switches on controller/head logic board are set to off (figure 70IMP8).	-	2	2	-	-	-	-	-	-
Check paper tension weights.	-	-	-	1	-	-	-	-	-
Do Code Strip to Reader Alignment Tests in printer manual. (See Note 2)	-	-	-	-	2	-	-	-	-
Check adjustment of pots P4, P6, and P7 on controller/head logic board (see Horizontal Servo System Tests and Adjustments in printer manual). (See Note 2)	-	-	-	-	3	-	-	-	-
Check adjustment of pot P2 on controller/head logic board (see Horizontal Servo System Tests and Adjustments in printer manual). (See Note 2)	-	-	-	-	4	-	-	-	-
Adjust Forms Density Control knob.	-	-	-	-	-	-	1	1	-
Check for worn out ribbon and replace cassette if necessary (procedure 70IMP8).	-	-	-	-	-	-	2	2	-
Check adjustment of pots P8 and P10 on controller/head logic board (see Vertical Servo System Tests and Adjustments in printer manual). (See Note 2)	-	-	-	3	-	-	-	-	-
Do Printhead to Platen Tests in printer manual. (See Note 2)	-	-	-	-	-	2	4	4	-
Replace printhead (procedure 70IMP13).	-	-	-	-	-	-	5	5	-
Do Format Reader and Code Disk Synchronization Tests in printer manual. (See Note 2)	-	3	-	-	-	-	-	-	-
Replace vertical transducer board (procedure 70IMP8).	-	4	-	4	-	-	-	-	-
Call for assistance.	-	5	3	5	5	3	6	6	X

Note: 1) After completing any repairs, verify printer is operational by pressing TEST PRINT.
2) Field service and reference manual listed in preface.

TABLE 70IMP4. DDLT FOR 70-LPM IMPACT PRINTER

PRINTER/CRT INTERFACE CHECKS				
ASSUME Power is on at the printer and all printer switch operations (including TEST PRINT) check OK per preceding sheets of this table. Printer input/output cable connected either to keyboard display PERIPHERAL CONNECTOR or keyboard display terminal is operational.				
CONDITIONS	SITUATIONS			
	1	2	3	
Do the impact printer test portion of procedure TS6 from the step where the START/STOP switch is pressed to light the switch indicator up to the end of the impact printer test. Assure that the keyboard switches are set per beginning of printer checkout steps and that rear panel TEST/NORMAL switch of display is in TEST position. After these test steps, use keyboard REPEAT and character key to print several print lines (132 characters a line). Does printer perform all checks properly? Caution: Do not allow a printer to continuously print adjacent columns for more than 5 minutes maximum at a time or solenoid will overheat and be damaged.	Y	N	OTHER	
ACTIONS	SEQUENCE			
Printer works OK. Return to table TS1.	X	X	-	
Check input/output cable at printer and at other end.	-	1	-	
Open logic chassis panel (procedure 70IMP5) and observe for proper printed circuit board seating in the printer logic rack (especially check RS-232 interface board).	-	2	-	
Observe for proper connections from printer logic module to input/output connector.	-	3	-	
Remove RS-232 interface board (procedure 70IMP6), and check that all switches/jumpers are properly used for this subsystem (procedure 70IMP8). Reinstall RS-232 interface board (procedure 70IMP6).	-	4	-	
Replace RS-232 interface board (procedure 70IMP9) with a new board making sure new board has proper switch/jump settings for this subsystem (procedure 70IMP9).	-	5	-	
Replace common controller board (procedure 70IMP6).	-	6	-	
Replace paper out switch. (See Note 2).	-	7	-	
See detailed field service manual and parts manual (see preface) and check/adjust/ replace until fault found. (See Note 2).	-	8	-	
Call for assistance.	-	9	-	
Note: 1) After completing any repairs, verify printer is operational by pressing TEST PRINT. 2) Field service and reference manual listed in preface.				

70-LPM Impact Printer Corrective Maintenance Procedures – General

The following pages identify procedures referenced from tables 70IMP1, 70IMP2, 70IMP3, and 70IMP4 for 70-LPM impact printer, or elsewhere within this manual. In addition, other procedures that may serve useful are identified. This impact printer has two companion manuals (see preface), which cover the detailed remove/replace procedures, adjustments, and all parts data identification. Whenever these procedures are identified on the following pages, a reference appears to send the reader to the proper procedural details in the companion field service manual.

For the 70-LPM impact printer, information provided in this hardware maintenance manual, plus detailed data in the companion field service and parts manuals, allows troubleshooting down to a very detailed level. This is in keeping with the policy of being able to perform detailed troubleshooting and repair at the customer site for medium and large printer equipments. This philosophy differs with the modular repair level approach used for small, lightweight printers such as the nonimpact printer.

Generally, it is at the discretion of the customer engineer making a service call to decide at which level adjustments or remove and replace procedures should be done for the best overall results at any particular site. This decision must take into consideration the availability of possible required spare parts, and availability/type of test equipment and tools which are required for different level adjustment/replacement procedures.

The two companion manuals support maintenance down to the level of PC board components and complex adjustments which require special tools/talents. The maintenance philosophy of this hardware maintenance manual is to limit the detailed level of maintenance for a printer when used as a peripheral device with a display terminal. On the site, this means maintaining certain areas of the printer at a higher level than may be possible by using all information available in the manuals. Specifically, these limitations are defined as follows:

- On the power supply circuit board, replace fuses only (procedure 70IMP10), otherwise replace the whole board (procedure 70IMP6).
- Repair any of the three logic boards in the logic chassis only by replacing them at board level (procedure 70IMP6 and 70IMP7) except for on-board fuses (procedure 70IMP10).

70-LPM Printer Status/Error Indicators

These six indicators (see figure 70IMP1), accessible via the side cover, display a code that informs the operator of printer operating status and/or of a printer error condition. A definition of these codes is provided by the six Printer Status/Error indicators, located under the side cover, which display a code that shows:

- If the printer is inoperable and requires maintenance personnel attention.
- The cause of unsuccessful format tape loading.
- When neither of the preceding conditions have occurred, the current operating status of the printer.

Table 70IMP5 defines all the codes that the indicators may display.

TABLE 70IMP5. PRINTER STATUS/ERROR INDICATOR CODES

CODE DISPLAYED BY INDICATORS*						SIGNIFICANCE
5	4	3	2	1	0	
0	0	0	0	0	1	Printer requires maintenance personnel attention
0	0	0	0	1	0	Printer requires maintenance personnel attention
0	0	0	0	1	1	START/STOP switch not released
0	0	0	1	0	0	Printer waiting for switch actuation (if an attempt to actuate the START/STOP switch has been made, this means the front cover interlock switch is open)
0	0	0	1	0	1	The format tape loaded is missing channel 1 punchings
0	0	0	1	1	0	The format tape loaded is punched incorrectly
0	0	0	1	1	1	LOAD EVFU switch not released
0	0	1	0	0	0	The format tape loaded is too long (more than 176 lines)
0	0	1	0	0	1	Printer requires maintenance personnel attention
0	0	1	0	1	1	Printer waiting to load data into line buffer
0	0	1	1	0	0	Printer is loading data into line buffer, but printline accumulation is not complete
0	0	1	1	1	0	FORM FEED switch not released
0	0	1	1	1	1	TEST PRINT switch not released
0	1	0	1	0	0	Printer requires maintenance personnel attention
0	1	0	1	0	1	
0	1	0	1	1	0	
0	1	0	1	1	1	
0	1	1	1	0	0	
0	1	1	1	0	1	
0	1	1	1	1	0	

* Key:

1 = indicator lit
0 = indicator not lit

02888

Procedure 701MP1 – Powering On Printer

Apply power to printer as follows:

1) Check ac power cord and I/O cable to ensure printer is ready for operation.

2) Ensure paper forms are properly installed and aligned in printer (procedure 701MP2).

3) Ensure ribbon cassette is installed in printer (procedure 701MP3).

4) Press ON/OFF circuit breaker on front of printer to ON. ON/OFF circuit breaker illuminates.

5) Lift side cover (figure 701MP1) from printer, and set the 6 LPI/8 LPI switch to 6 LPI.

NOTE

At least two full pages of forms will move through tractors in the following step. To prevent this paper loss, press clutch retractor lever (figure 701MP1) during loading.

6) Check that format tape is properly installed (procedure 701MP4) and press LOAD EVFU switch to load format from tape into printer memory.

7) If the 6 LPI/8 LPI switch was originally at 8 LPI, return the switch to that position.

8) Using clutch retractor lever and Vertical Forms Positioning knob (figure 701MP1), align paper so printhead is at a top of form.

9) If front cover is in place, check that it is seated securely; if front cover is removed, pull interlock switch up.

10) Press START/STOP switch on printer control panel. START/STOP switch should illuminate. If not, redo step 9 and press START/STOP again.

When printer power is to be turned off, press ON/OFF circuit breaker to OFF.

Procedure 701MP2 – Installing/Aligning Paper Forms

To install/align paper forms in printer, perform the following:

1) Turn printer power off and lift front cover from printer.

2) Place stack of fan folded forms on flat surface behind printer (figure 701MP2).

3) Insert top form sheet in rear forms slot and under paper tension weights. Paper tension weights can be raised and locked in up position during forms loading. Feed forms into slot from rear until leading edge of forms is visible at front of printer. If forms are multiple-part forms, it may be necessary to increase the gap between platen and printhead by turning Forms Density Control knob (figure 701MP1) fully clockwise so forms pass readily through printer.

4) Go to front of printer and pull forms until approximately one full form sheet has passed by printhead.

5) Open left tractor flap (figure 701MP1) and position paper form feed holes on drive pins of tractor. Close tractor flap.

6) Replace front cover and use column guide on it as reference for setting forms margins.

7) Pull left tractor clamp up and slide left tractor to proper position for left margin. Reclamp tractor assembly in place by pushing tractor clamp back.

8) Open right tractor flap and release its tractor clamp. Position right tractor so tractor feed pins are seen through form feed holes.

9) Keep form even and position it on the right tractor feed pins. Verify that form is not slanted horizontally and close tractor flap.

10) Slide right tractor to right until form is taut. Push tractor clamp back to clamp tractor in place.

11) Turn printer power on and load format tape into printer memory (procedure 701MP1).

12) Manually align the first print line position of a following form with printhead line finder (figure 701MP3), so that printing will occur at the top of that form. This is done by pressing the clutch retractor lever and turning Vertical Forms Positioning knob.

13) Reset Forms Density Control knob if it was moved during forms installation. Also lower the necessary paper tension weights. For single-part forms, use only the two center weights. Swing the outer two weights up, away from forms. For multiple-part forms, all four weights are normally used. For narrow forms, lift up any weight not covering the form with at least half its width. If forms tear at feed holes, weights should be lifted until tearing is eliminated. If tearing continues, readjust forms density control knob.

Impact Printer Forms

The printer will handle standard continuous-fan folded forms paper with feed holes on each edge, with or without marginal perforations. The forms may be from 4 to 16.75 in (101.6 to 425 mm) in width including margins, and 3.5 to 17 in (88.9 to 431.8 mm) long from fold-to-fold. When using the output paper basket, the forms length is limited to 12 in (304.8 mm) from fold to fold.

The forms must have sprocket holes punched along both margins 0.25 ±0.03 in (6.35 ±0.76 mm) from the paper edge to the hole center lines. The distance between hole centerlines must be 0.50 ±0.005 in (12.7 ±0.13 mm) nonaccumulative, and the diameter of the holes should be 0.156 ±0.010 in (3.96 ±0.25 mm). Multiple-part forms must be suitably fastened with nonmetallic fasteners. The following list specifies the recommended forms in terms of parts and weights.

Parts	White Sulphite Bond Paper	Carbon Paper
1	15 pound continuous bond (56 g/m^2)	
1	24 pound continuous bond (90 g/m^2)	
2 and 3	12 pound continuous bond (45 g/m^2)	8 pound (14 g/m^2)
2 and 3	15 pound continuous bond (56 g/m^2)	8 pound (19 g/m^2)
4 and 5	12 pound continuous bond (45 g/m^2)	6 pound (14 g/m^2)

Procedure 70IMP3 – Replacing Ribbon Cassette

Replace ribbon cassette as follows:

1) Turn printer power off and lift front cover from printer.

2) Place finger tips under cassette locking tab and pull it up until a slight click is heard indicating that cassette has disengaged from head support and pulley assembly (figure 70IMP4).

3) Remove ribbon cassette by lifting it up off of printhead. The printer ribbon consists of a disposable ribbon cassette (CDC Part Number 44671690).

4) Remove new ribbon cassette from wrappings and assure that cassette locking tab is in the up (disengaged) position.

5) Place new ribbon cassette over printhead so that drive spline on bottom of cassette engages the cassette drive shaft. The ribbon advance knob on top of cassette may be turned counterclockwise slightly to aid in engaging the spline and drive shaft.

6) While applying slight pressure to top of cassette, press cassette locking tab down until a slight click is heard. Cassette should now be locked in place.

7) To ensure proper seating, grasp cassette by both sides and lift up using moderate pressure. If cassette lifts off printhead, it was not seated properly and steps 4 through 7 must be repeated.

8) Replace front cover and make sure it is seated securely, thereby enabling interlock switch.

Procedure 70IMP4 – Installing/Loading Format Tape

To install/load format tape, refer to figure 70IMP5 and perform following:

NOTE

Unless format tape is loaded, printer can only perform single-line form advances.

1) Turn printer power off and lift side cover from printer.

2) Lift brush block away from format tape drive sprocket by pulling brush block retraction lever back, toward front of printer until lever detent holds block away from drive sprocket.

3) Ensure tape is correct for the 6 LPI/8 LPI selection and is punched to correspond with forms length (see format tape punching instructions at the end of this procedure).

4) Place format tape over teeth on drive sprocket and push brush block retraction lever forward toward rear of printer, until brush block holds format tape in place on drive sprocket. Assure that tape is installed with smaller drive holes toward inside (center of printer); this places channel 1 (form feed channel) in the proper position on drive sprocket.

5) Push the 6 LPI/8 LPI switch to 6 LPI.

6) Turn printer power on.

NOTE

At least two full pages of forms will move through tractors in the following step. To prevent this paper loss, press clutch retractor lever (figure 701MP1) during loading.

7) Press LOAD EVFU switch. During loading, tape passes through reader until two successive form-feed punchings are sensed. Tape is then automatically reread to check loaded data. When tape movement stops, load and check is complete.

8) If printing is to be at 8 lines per inch (8 lines per 25.4 mm), change setting of the 6 LPI/8 LPI switch to 8 LPI.

9) Using clutch retractor lever and Vertical Forms Positioning knob, align paper so printhead is at a top of form.

NOTE

Steps 5, 7, and 8 must be repeated each time printer is turned on. If a change in forms length or 6 LPI/8 LPI reselection is made, a different format tape must be installed and all the preceding steps repeated.

Format Tape

The printer format tape (CDC Part Number 95414500) is 1 in (25.4 mm) wide with sprocket holes on 0.1 in (2.54 mm) centers. Before use, format tape channel 1 must be punched to correspond with the top-of-form (form feed) position of the length forms in use and channel 2 punched at the desired vertical tab.

Punching Format Tape

The following procedure describes punching and splicing format tape, making it ready for installation in printer. In addition to format tape, this requires a format tape punch (CDC Part Number 76657900) and adhesive format tape splice (CDC Part Number 76628200).

1) Raise splicer arm of punch out of way (figure 701MP18).

2) Slide punch head to rear of punch.

3) Raise tension arms and place format tape on punch as shown in figure 701MP18. Then lower tension arms to hold tape in place.

4) Slide punch head to the channel 1 position and press punch head down. This punching is the top-of-forms (form feed) hole.

5) If vertical tab is also desired at the top-of-forms position, slide punch head to channel 2, and press punch head.

NOTE

If a vertical tab hole is not punched in channel 2, printer receipt of a vertical tab code will cause a forms runaway.

6) If vertical tab is to be elsewhere than at the top of forms, lift tension arms and do the following:

   a) Determine how many print lines are between the top-of-forms position and the vertical tab position on form. Depending on the 6 LPI/8 LPI selection to be used, there are either 6 or 8 print lines per inch (25.4 mm) on form.

b) Each sprocket hole in tape equals one print line. Count the sprocket holes from the top-of-forms hole in tape to the vertical tab position and mark the location with a pencil.

c) Reposition format tape so that pencil mark is aligned with punch head. Lower tension arms.

d) Slide punch head to channel 2 and press punch head.

7) Determine what length format tape must be:

a) Multiply form length in inches by the 6 LPI/8 LPI selection to be used. The result is the number of tape sprocket holes that equate to a form. For example:

11-inch form
x6 LPI

66 tape sprocket holes per form

NOTE

Limit of format tape length is from 5.5 to 12.5 inches (139.7 to 317.5 mm or 55 to 125 sprocket holes).

b) If the result is less than 55, the punching pattern for the form must be repeated until the sprocket holes of the patterns total 55 or more. Starting at previously punched top-of-forms hole, use the result and count that number of sprocket holes down the tape. This location is the next top-of-forms position which must be punched. When punching is complete, use the result to determine where tape is to be cut. If two patterns were punched, tape must contain 2 times the resulting number of sprocket holes; or 3 times the number if three patterns were punched.

c) If the result is 55 or more, no further punching is necessary. When spliced, tape must contain the same number of sprocket holes as result. Count the sprocket holes from punched end of tape and mark the location where tape is to be cut.

8) Align the location to be cut with groove below splicer arm. Lower splicer arm and draw cutting blade across tape.

9) To splice the tape, raise splicer arm and place tape ends over the punch sprocket pins so that the ends abut over the splicer-arm groove.

10) Remove adhesive backing from a format tape splice and position splice on sprocket pins so that it equally covers both ends of the tape.

11) Lower splicer arm and press arm to join tape ends with splice.

12) Remove tape from punch, turn tape inside out and apply a splice to that side. In applying the second splice, offset it slightly from the first (one or two drive sprocket holes) to reduce the abrupt change in thickness.

13) Turn tape inside out. Tape is now ready for installation in printer.

Procedure 701MP5 – Removing/Installing Cabinet Covers

Refer to figure 701MP6 and remove appropriate covers as follows:

1) Front Cover

Removal of front cover provides access for forms loading and changing ribbon cassette and printhead. To remove front cover, grasp the two lifting tabs on either side of cover and lift cover off upper cabinet.

When installing front cover, the beveled edge must be toward rear of printer, facing down. Check that cover corner guides are engaged in upper cabinet and press cover down.

NOTE

The interlock switch under front cover will not close if cover is not properly seated.

2) Side Cover

Removal of side cover provides access to format tape, 6 LPI/8 LPI switch, 10 CPI/16.5 CPI switch, and LOAD EVFU switch. To remove side cover, place finger tips in the depression in left side of upper cabinet and lift side cover from cabinet.

3) Upper Cabinet Cover

Removal of upper cabinet cover provides access to control panel wiring, format reader, vertical servo motor, and printhead slide shafts.

To remove cover, turn two locking screws (figure 701MP6) clockwise until they clear the cover. Pull Vertical Forms Positioning knob off its shaft and lift cabinet cover from lower cabinet skirt.

When installing cover, turn locking screws fully counterclockwise.

4) Lower Cabinet Skirt

Removal of lower cabinet skirt provides full access to printer chassis and it must be removed to access most of the PC boards. The lower cabinet skirt cannot be removed without first removing the upper cabinet cover.

To remove skirt, completely loosen four screws (figure 70IMP6) and lift skirt and screws from base plate.

NOTE

The screws retaining lower cabinet skirt are not captive within skirt and may fall out if skirt is tipped or turned over.

Procedure 70IMP6 – Replacing Power Supply, Controller/Head Logic Board and RS-232 Interface Board

To replace either the power supply or controller/head logic PC board, perform following:

1) Turn printer power off and disconnect ac power cord.

2) Locate controller/head logic, power supply and RS-232 interface board, 1A04, in printer chassis (figure 70IMP7).

3) Release latch at each side of RS-232 interface board and swing it down first from printer chassis. Next, if controller/head logic board or power supply board needs to be replaced, swing down in the same manner.

4) Disconnect all connectors from board being replaced and tag connectors for later reconnection.

5) Loosen four screws holding board to chassis hinge bracket and remove board.

6) Place new board on chassis hinge bracket and tighten four screws.

7) If board(s) contain switches and/or jumpers, check settings/placements per terminal subsystem requirements.

8) Reconnect board connectors.

9) If controller/head logic board is being replaced, do as follows:

   a) Check that all eight selection switches on board are set to the off position (figure 701MP9).

   b) Perform horizontal and vertical servo system electrical adjustments per printer field service and reference manual.

10) If power supply board is being replaced, do as follows:

   a) Refer to figure 701MP10 and verify that all its fuses are in place.

   b) Perform power supply board electrical adjustments per printer field service and reference manual.

11) Swing board(s) up into chassis and latch.

Procedure 701MP7 – Replacing Needle Driver Board

To replace needle driver PC board (figure 701MP11), perform the following:

1) Turn printer power off and disconnect ac power cord.

2) From front of printer, grasp front of needle driver board, lift it slightly to clear front board retainers, and partially withdraw it from chassis.

3) Disconnect board connectors and tag them for reconnection.

4) Slide new board part way into chassis and reconnect board connectors.

5) Perform needle driver board electrical adjustment per printer field service and reference manual.

6) Slide board back into chassis until board is held by front retainers.

Procedure 701MP8 — Replacing Vertical Transducer Board

To replace vertical transducer PC board, refer to figure 701MP12 and perform the following:

1) Turn printer power off and disconnect ac power cord.

2) Remove two screws and nuts holding vertical transducer board mounting bracket to chassis.

3) Move board and bracket slightly away from chassis and disconnect three connectors from board.

4) Withdraw board and bracket free of chassis, being careful not to damage code disk.

5) Remove two screws and nuts fastening board to bracket.

6) Fasten new board to bracket with screws and nuts removed in step 5.

7) Carefully move board and bracket near chassis and attach board connectors.

8) Position board and bracket so code disk is between slot of board optical reader. Loosely attach bracket to chassis with screws and nuts.

9) Turn code disk until its alignment window is at bottom.

10) Adjust position of board and bracket until optical reader is aligned with code disk as shown in figure 701MP12. Tighten bracket to chassis.

11) Set vertical transducer board 10 CPI/16.5 CPI and 6 LPI/8 LPI switches to desired operating positions:

    a) With 10 CPI/16.5 CPI switch in 10 CPI position, printer prints standard 132-character print line of 10 characters per inch (10 characters per 25.4 mm). With switch in 16.5 CPI position, printer prints a compressed-pitch line of 16.5 print characters per inch (16.5 characters per 25.4 mm); this permits 217 characters to be printed across a full print line.

    b) With 6 LPI/8 LPI switch in 6 LPI position, the printer prints 6 lines per inch (6 lines per 25.4 mm) vertically, and with switch in the 8 LPI position, it prints 8 lines per inch (8 lines per 25.4 mm) vertically.

Procedure 701MP9 – Checking/Setting Internal Switches and Jumpers

Check/set internal switches and jumpers for the impact printer as follows:

1) Open rear logic chassis panel (procedure 701MP6).
2) Swing RS-232 interface board and adapter chassis down to a horizontal position, per directions given in procedure 701MP6, step 3.
3) Verify that all switches and jumpers (figure 701MP13) conform to interface configuration required for correct operation with keyboard display logic (refer to impact printer installation procedures in associated installation instruction manual).
4) Return RS-232 interface board and adapter chassis to original position.

Procedure 701MP10 – Checking/Replacing Fuses

All printer fuses are on the power supply board. To check/replace fuses, do the following:

1) Turn printer power off and disconnect ac power cord.
2) Lower controller/head logic and power supply boards from printer chassis per steps 2 and 3 of procedure 701MP6.
3) Observe fuses (figure 701MP14), and replace any that are burned out.

Procedure 701MP11 – Checking Internal Cables

Check internal cables of printer as follows:

1) Turn printer power off and disconnect ac power cord.
2) Visually inspect internal cables and cable connectors for signs of damage. If loose connectors are found, reconnect and check printer operation before proceeding with the remainder of this procedure.
3) Remove connectors at both ends of suspect cable and inspect connector pins (of cable or board where cable attaches) for damage. If damaged pins are found that cannot be repaired, replace cable or PC board as appropriate.
4) If damaged connector pins are not found, cable can be further checked by using ohmmeter to check cable-wire continuity. Use diagram in printer field service and reference manual to check cables in this manner.
5) If open wire(s) are found, repair if possible or replace cable (procedure 701MP12).

Procedure 701MP12 – Replacing Internal Cables

Replace a cable within a printer as follows:

1) Turn printer power off and disconnect ac power cord.

2) Refer to internal cabling diagram (figure 701MP15) for cabling interconnections.

3) Note connector location and pin orientation before removing cable; if necessary, mark or tag connectors to ensure proper reconnection.

4) If cable ties must be removed, note their location.

5) Install new cable in printer, assuring that cable is properly routed and connected to proper board connectors.

6) Install any cable ties that were removed during cable removal.

Procedure 701MP13 – Replacing Printhead

Replace printhead as follows:

1) Turn printer power off and disconnect ac power cord.

2) Lift front cover from printer.

3) Remove ribbon cassette from printhead (procedure 701MP3).

4) Reach under printhead support casting and disconnect printhead harness from flat cable (figure 701MP16).

5) Unclamp printhead from support casting by grasping both right and left hand clamping levers and swinging them out toward side of printer cabinet until printhead is released.

6) Remove printhead harness from retaining hook under support casting.

7) Slide printhead toward front of printer until printhead is free of support casting.

8) Place new printhead with its side holes on support casting guide pins, and slide printhead back against casting.

9) Hold printhead against casting with one hand and secure printhead with the two clamping levers. Ensure that ends of clamp levers are on corners of printhead before clamping.

CAUTION

Be careful not to crimp printhead harness wires in next step.

10) Route printhead harness as shown in figure 70IMP16 and connect harness connector to flat cable connector. Ensure that printhead harness connector guides face up when making this connection; also ensure that printhead harness passes behind retaining hook.

11) Grasp printhead support casting and slide it back and forth to ensure that printhead harness does not rub on front support shaft or hit on side of printhead structure. Adjust harness in retaining hook if necessary.

12) Replace ribbon cassette on printhead (procedure 70IMP3).

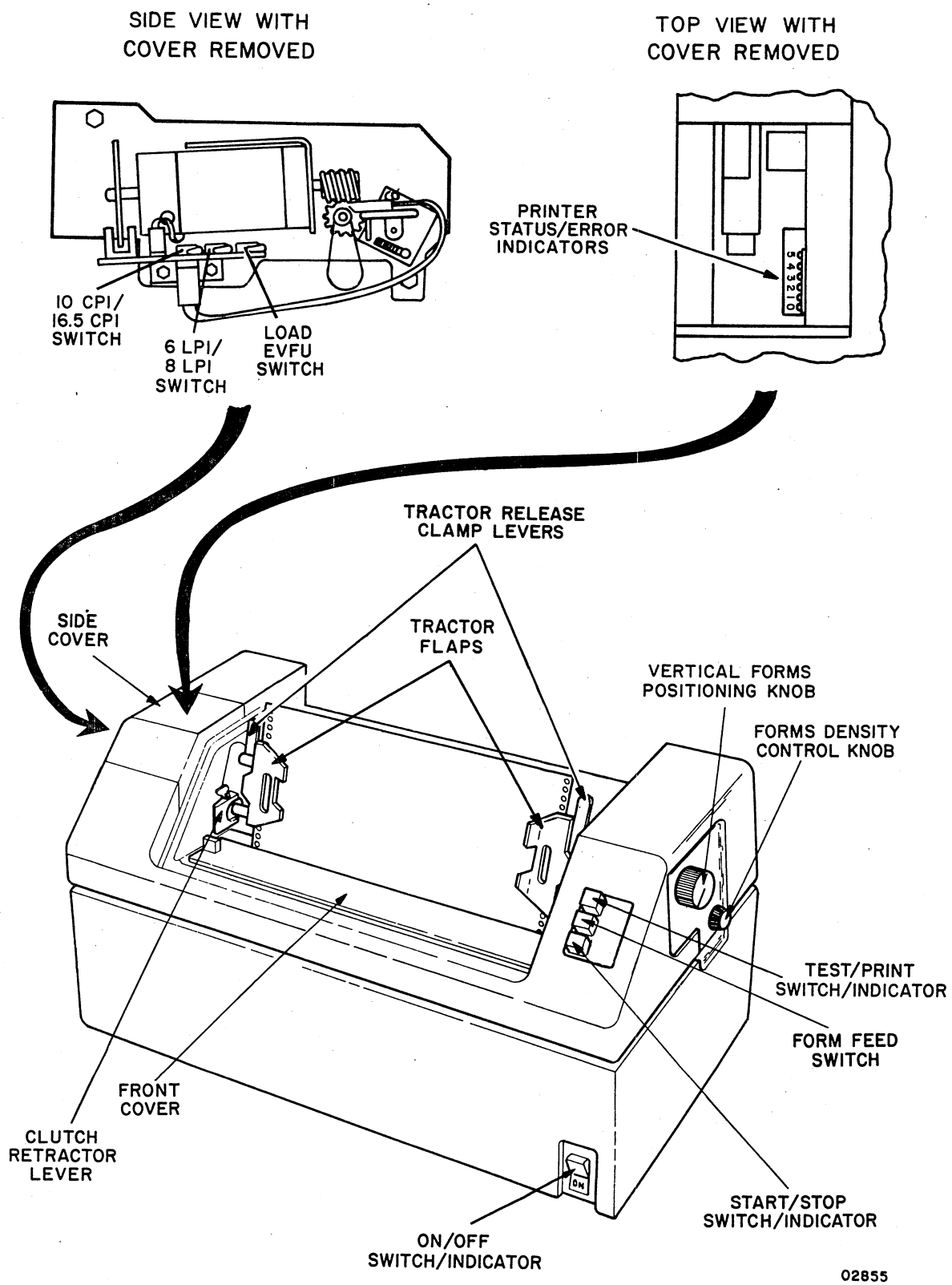

Figure 701MP1. Impact Printer Controls and Indicators

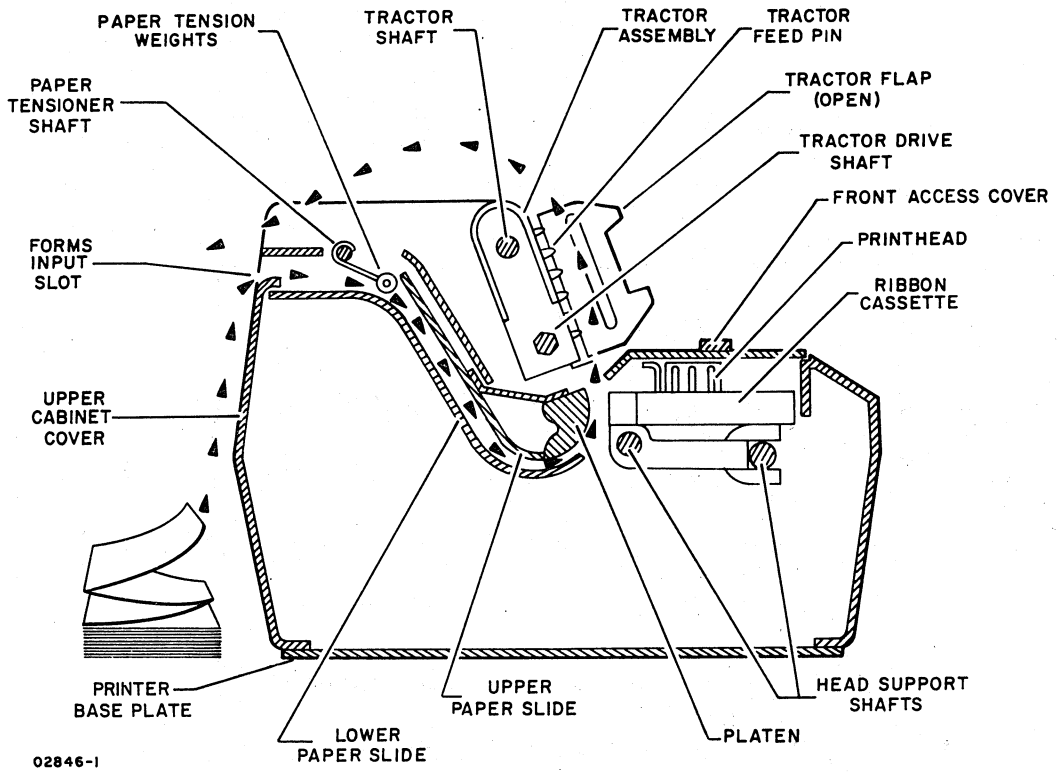

Figure 70IMP2. Paper Forms Installation

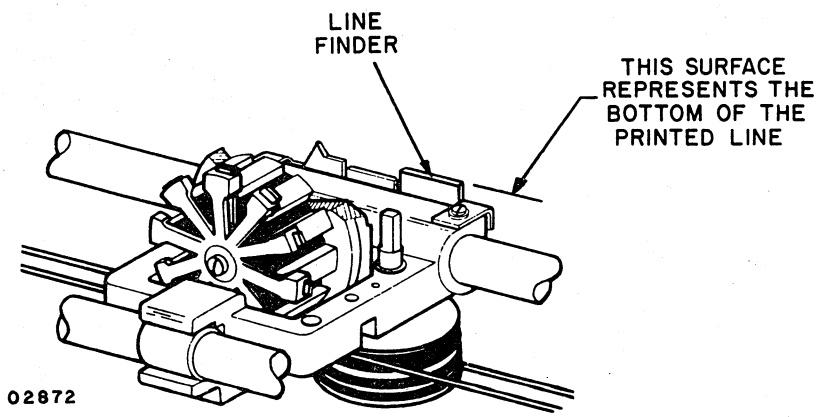

Figure 70IMP3. Printhead Line Finder

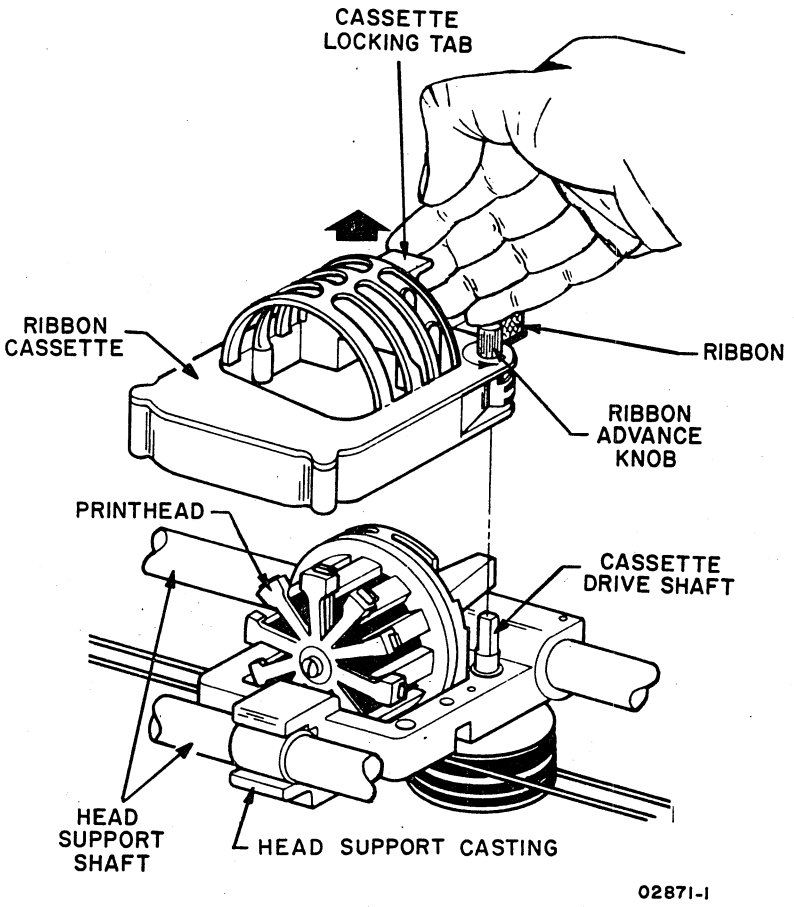

Figure 701MP4. Ribbon Cassette Replacement

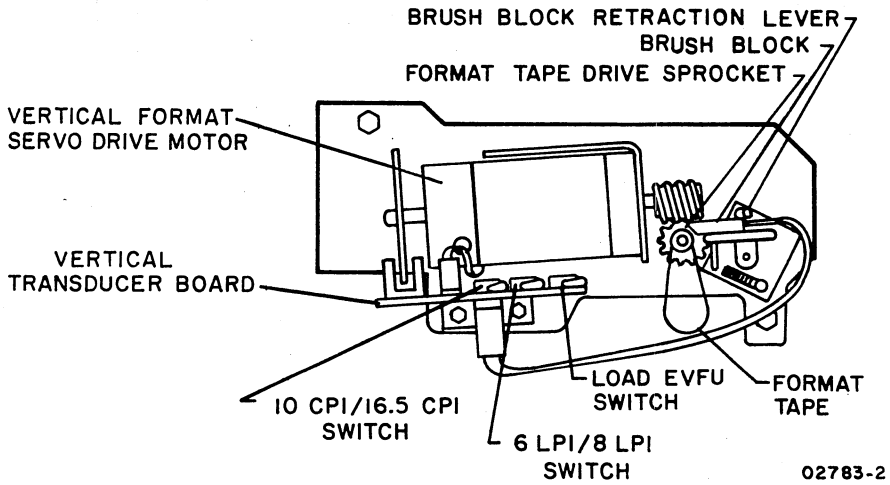

Figure 701MP5. Format Tape Installation

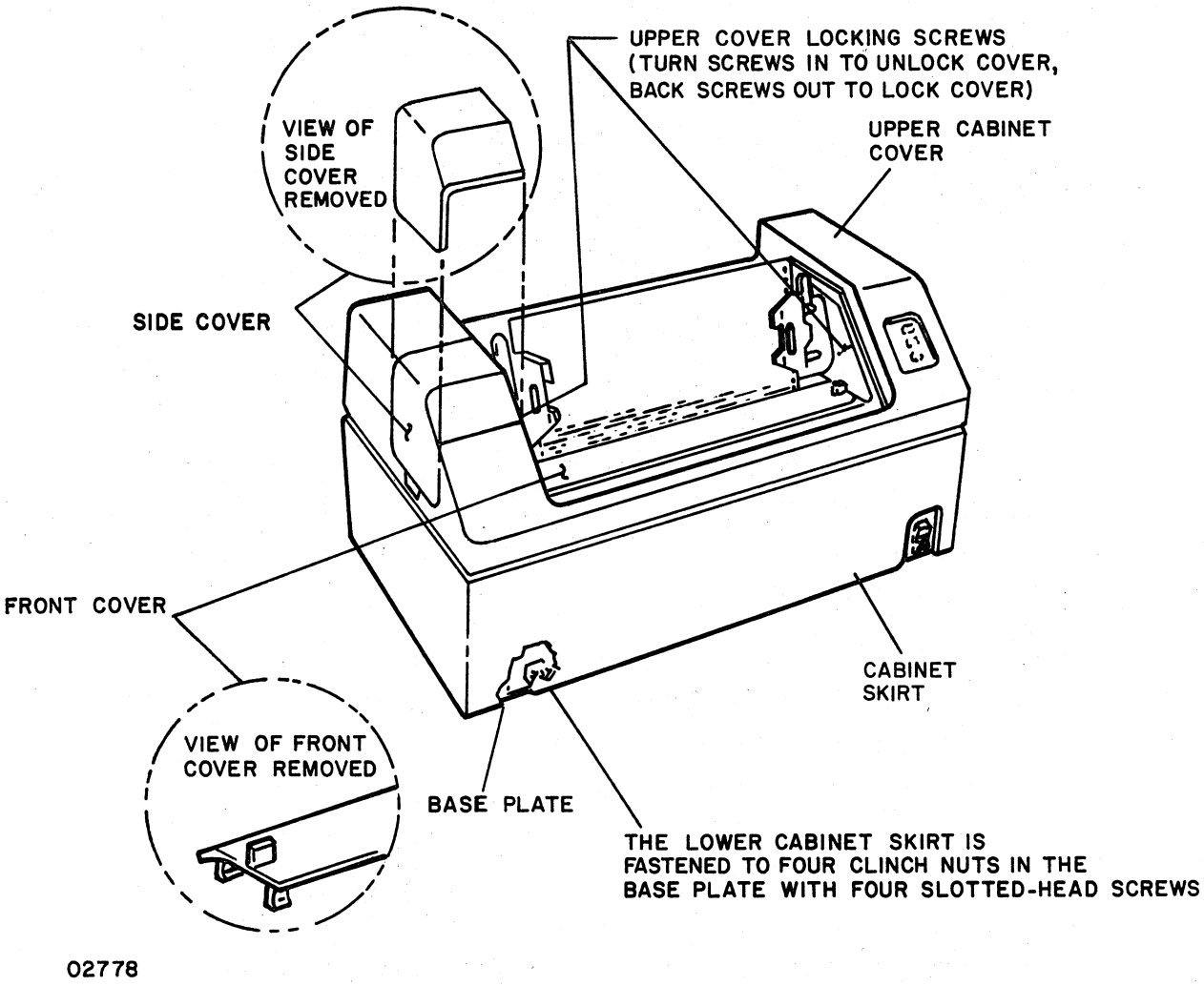

Figure 701MP6. Printer Cabinet Covers

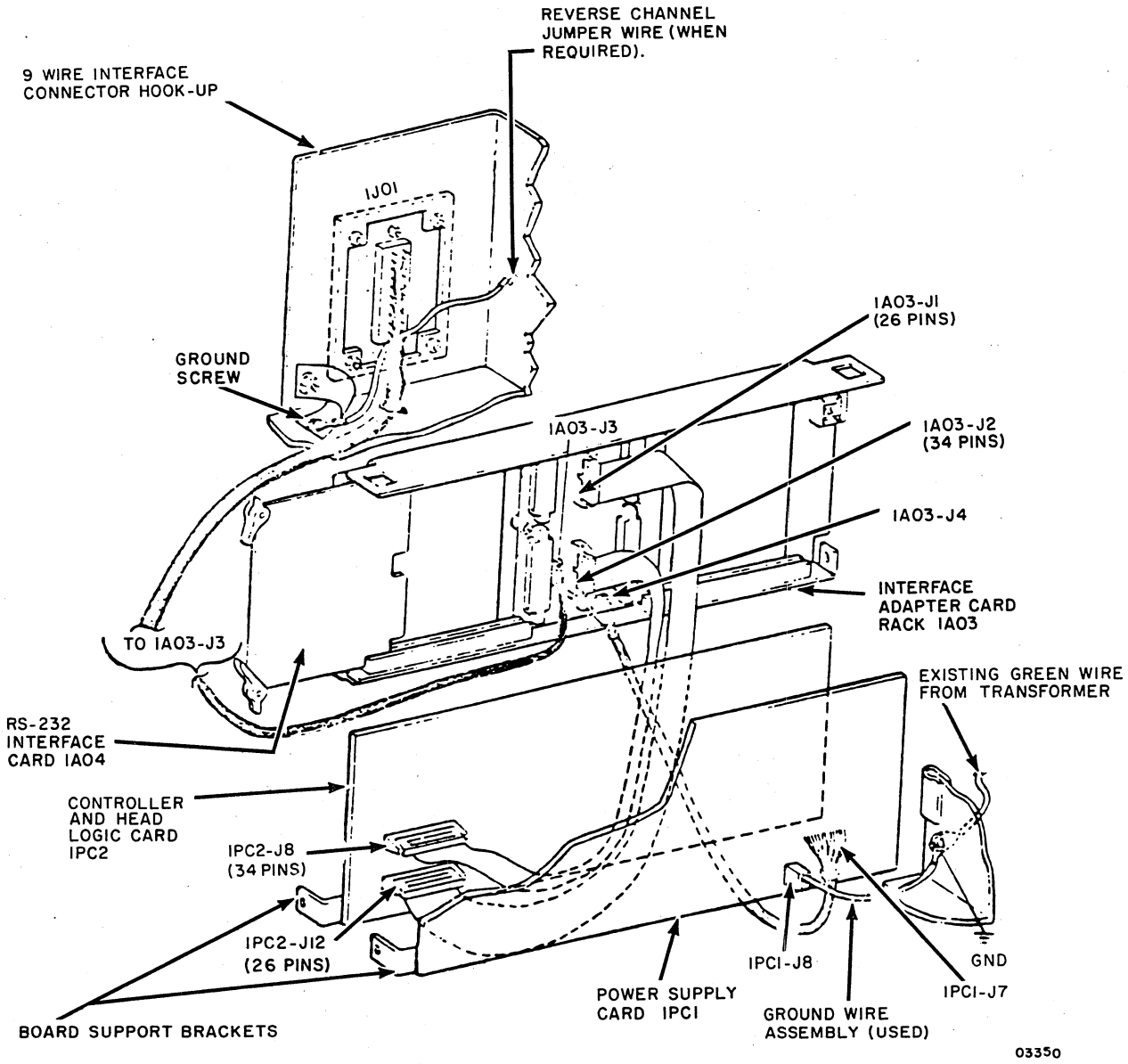

Figure 701MP7. RS-232 Interface Card and Rack

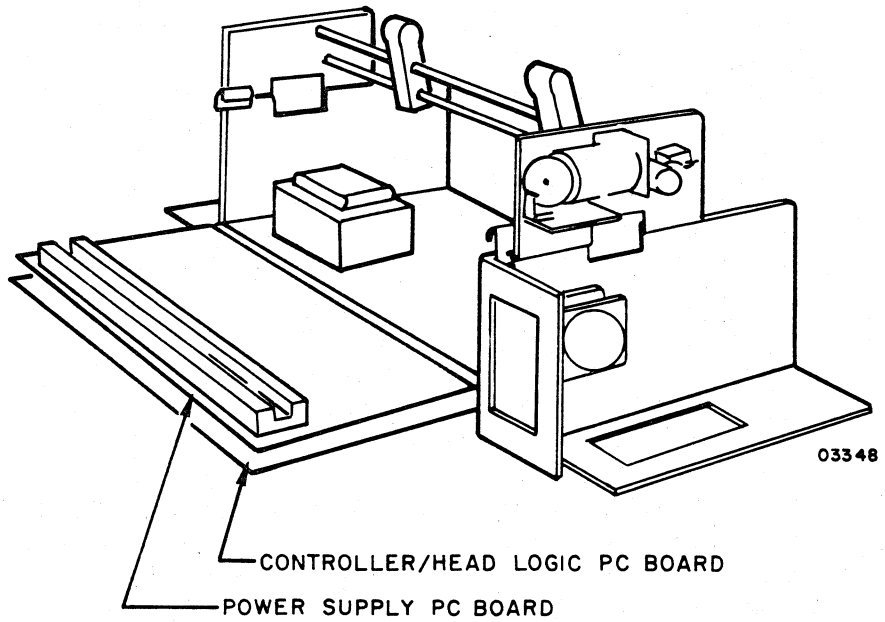

Figure 701MP8. Controller/Head Logic and Power Supply Boards

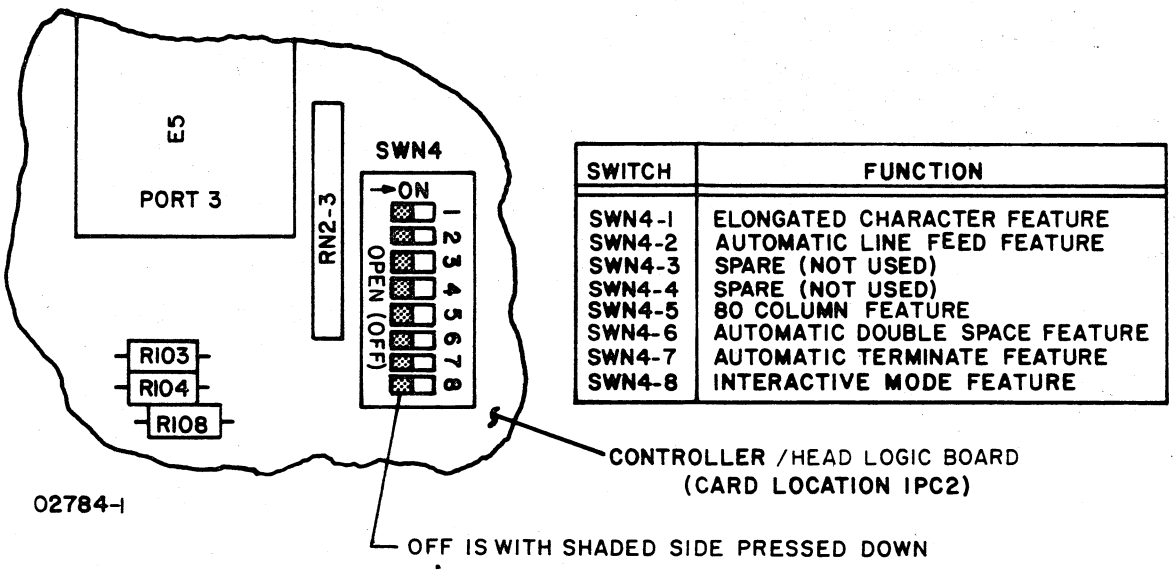

SWITCH	FUNCTION
SWN4-1	ELONGATED CHARACTER FEATURE
SWN4-2	AUTOMATIC LINE FEED FEATURE
SWN4-3	SPARE (NOT USED)
SWN4-4	SPARE (NOT USED)
SWN4-5	80 COLUMN FEATURE
SWN4-6	AUTOMATIC DOUBLE SPACE FEATURE
SWN4-7	AUTOMATIC TERMINATE FEATURE
SWN4-8	INTERACTIVE MODE FEATURE

Figure 701MP9. Controller/Head Logic Board Switch Settings

IDENTIFICATION	LOCATION	FUNCTION	PART NUMBER	AMPERES	TYPE
F1	POWER SUPPLY (1PC1)	+36 VOLTS	24536202	5	MTH5
F2	POWER SUPPLY (1PC1)	-36 VOLTS	24521723	1.6	MDL1.6 (SLO BLOW)
F3	POWER SUPPLY (1PC1)	+5 AND +12 VOLTS	24536202	5	MTH5
F4	POWER SUPPLY (1PC1)	-5 AND -12 VOLTS	24512920	1	AGC1
F5	POWER SUPPLY (1PC1)	+36 VOLTS	24521723	1.6	MDL1.6 (SLO BLOW)
3CB01	FRONT OF PRINTER	MAIN POWER BREAKER	76647100	7.5	203-22-1-3291-1

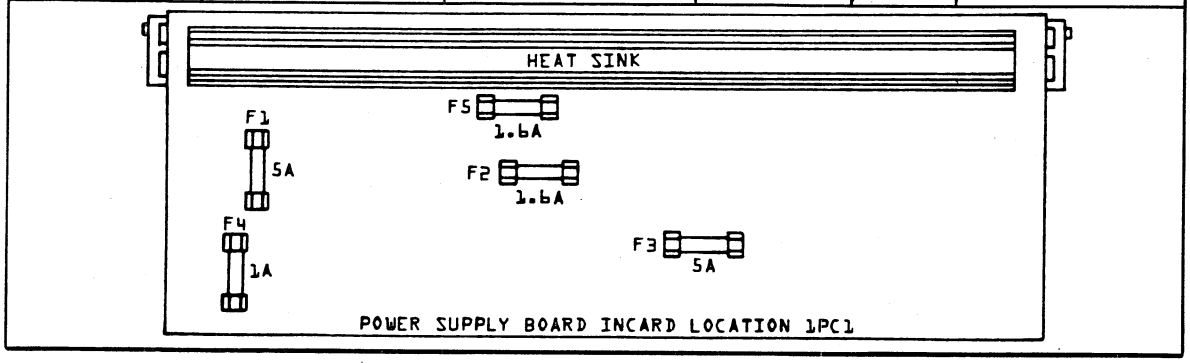

02974

Figure 70IMP10. Fuses on Power Supply Board

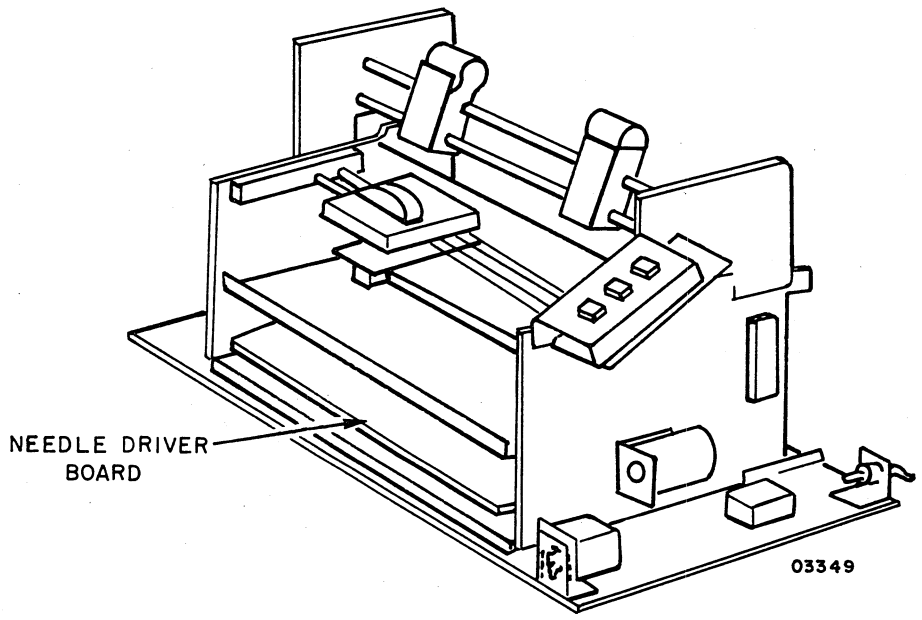

Figure 70IMP11. Needle Driver Board

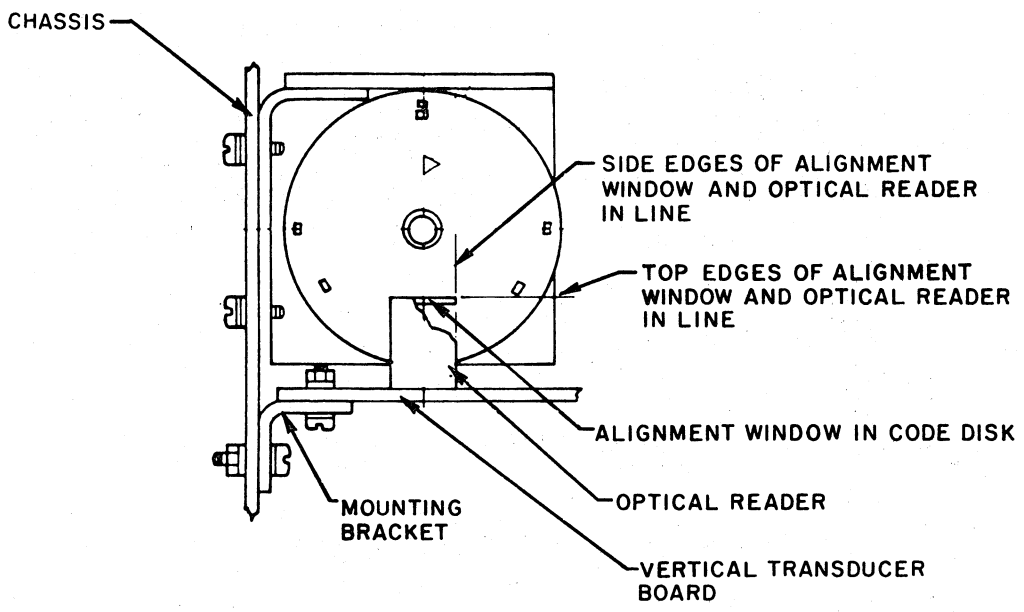

VIEW A-A

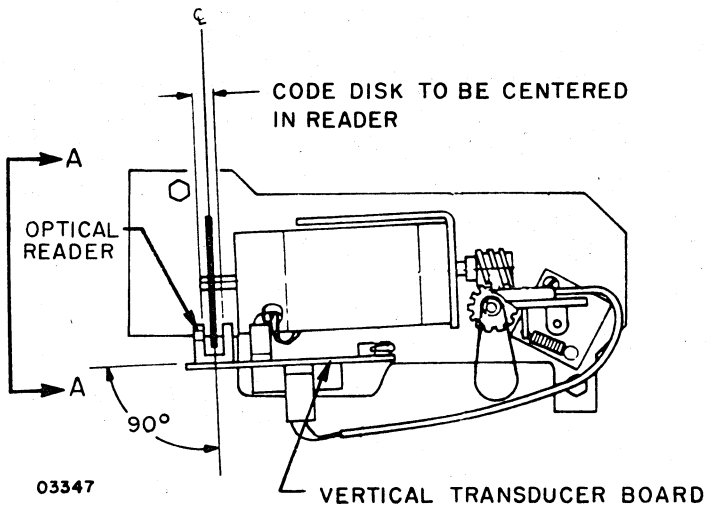

Figure 701MP12. Vertical Transducer Board Installation

	REC CLOCK TIME 416 USEC	REC CLOCK TIME 202 USEC	REC CLOCK TIME 104 USEC	REC CLOCK TIME 52 USEC	REC CLOCK TIME 35 USEC	REC CLOCK TIME 26 USEC	REC CLOCK TIME 13 USEC	REC CLOCK TIME 6.5 USEC													
	BAUD RATE SELECTION 150	BAUD RATE SELECTION 300	BAUD RATE SELECTION 600	BAUD RATE SELECTION 1200	BAUD RATE SELECTION 1800	BAUD RATE SELECTION 2400	BAUD RATE SELECTION 4800	BAUD RATE SELECTION 9600	EVEN PARITY	ODD PARITY	NO PARITY	5 DATA BITS	6 DATA BITS	7 DATA BITS	8 DATA BITS	BUFFER OVERFLOW	AUTO ANSWERING	REVERSE CHANNEL MARK	REVERSE CHANNEL SPACE	AUDIBLE ALARM OUT OF PAPER	AUDIBLE ALARM BEL CODE
J01																				X	
J02																			X		
J03																		X			
J04																X					
J05																	X				
J06																					X
SW1-1	ON	OFF	OFF	OFF	OFF	OFF	OFF	OFF													
SW1-2	ON	ON	OFF	OFF	ON	OFF	OFF	OFF													
SW1-3	OFF	ON	ON	OFF	OFF	OFF	OFF	OFF													
SW1-4	OFF	OFF	ON	ON	OFF	OFF	ON	OFF													
SW1-5	ON	ON	ON	ON	ON	OFF	ON	OFF													
SW1-6	ON	ON	ON	OFF	OFF	OFF	OFF	OFF													
SW1-7	ON	ON	OFF	OFF	ON	ON	OFF	ON													
SW1-8	ON	OFF	OFF	ON	OFF	ON	ON	ON													
SW2-1									ON	ON	OFF										
SW2-2									OFF	ON											
SW2-3												ON	ON	OFF	OFF						
SW2-4												ON	OFF	ON	OFF						
SW2-5	ON	ON	ON	ON	OFF	ON	OFF	OFF													
SW2-6	OFF	OFF	OFF	OFF	ON	OFF	ON	ON													
J07												X	X	X							

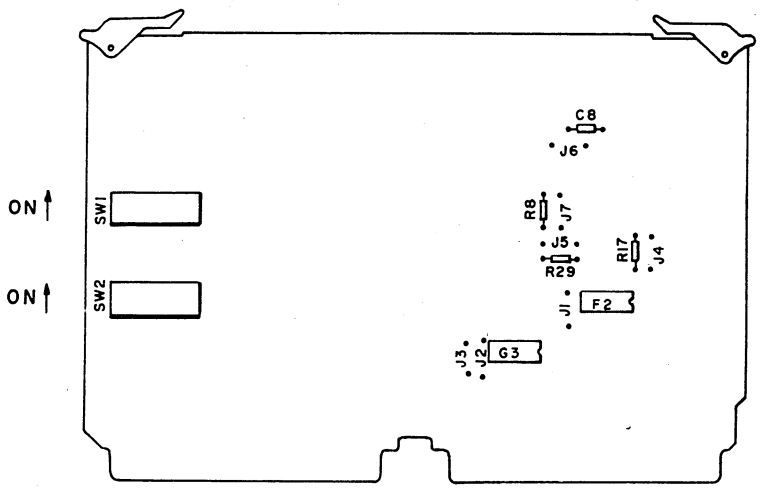

NOTES:

1) TO USE THE PRINTER ON OTHER BAUD RATES THAN SHOWN ABOVE, THE FOLLOWING FORMULA CAN BE USED

$$\text{LOAD VALUE IN DECIMAL} = 256 - \left(\frac{1}{32(\text{BAUD RATE})A}\right)$$

WHERE:

$A = 1 \times 10^{-6}$ FOR SWITCH 2-5 CLOSED AND 2-6 OPEN

$A = 0.25 \times 10^{-6}$ FOR SWITCH 2-6 CLOSED AND 2-5 OPEN

THE LOAD VALUE IN DECIMAL MUST THEN BE CONVERTED INTO BINARY. THEN, THAT VALUE IS LOADED INTO THE SWITCHES.

2) SWITCHES 2-5 AND 2-6 CAN NEVER BE CLOSED OR OPEN AT THE SAME TIME. IF EITHER OF THESE OCCURS, EITHER A WRONG FREQUENCY OR NO FREQUENCY IS SUPPLIED TO THE BAUD RATE SELECTOR.

02290-1

Figure 70IMP13. 70-LPM Impact Printer Internal Switches and Jumpers (RS-232-C Board)

IDENTIFICATION	LOCATION	FUNCTION	PART NUMBER	AMPERES	TYPE
F1	POWER SUPPLY (1PC1)	+36 VOLTS	24536202	5	MTH5
F2	POWER SUPPLY (1PC1)	-36 VOLTS	24521723	1.6	MDL1.6 (SLO BLOW)
F3	POWER SUPPLY (1PC1)	+5 AND +12 VOLTS	24536202	5	MTH5
F4	POWER SUPPLY (1PC1)	-5 AND -12 VOLTS	24512920	1	AGC1
F5	POWER SUPPLY (1PC1)	+36 VOLTS	24521723	1.6	MDL1.6 (SLO BLOW)
3CB01	FRONT OF PRINTER	MAIN POWER BREAKER	76647100	7.5	203-22-1-3291-1

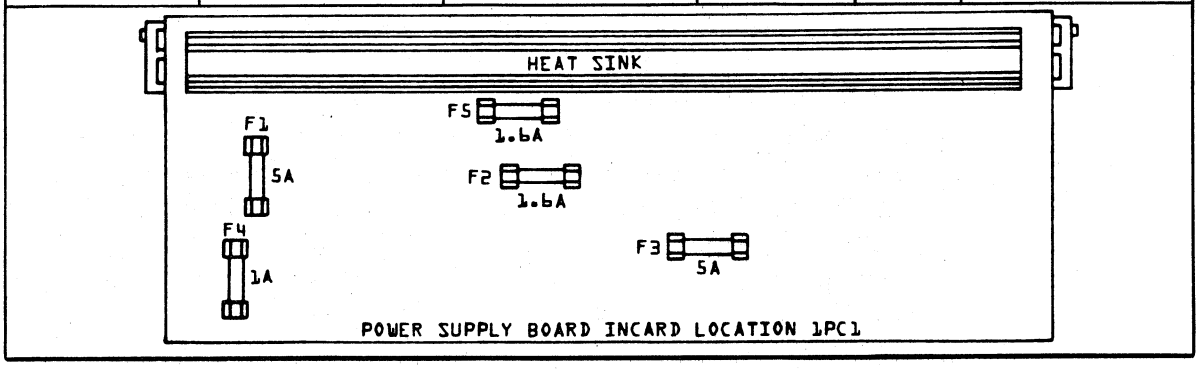

02974

Figure 70IMP14. Fuses on Power Supply Board

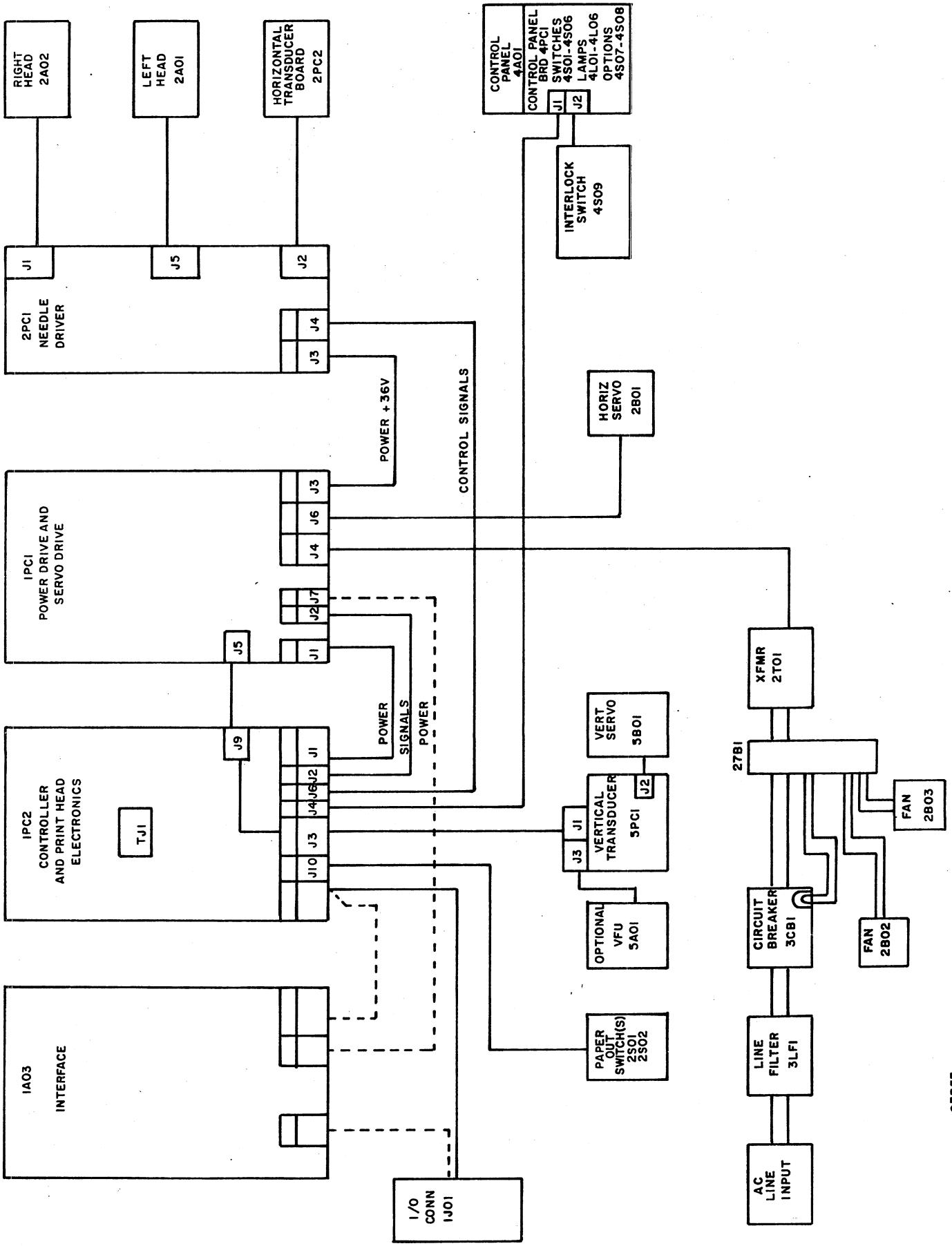

Figure 701MP15. Printer Internal Cabling

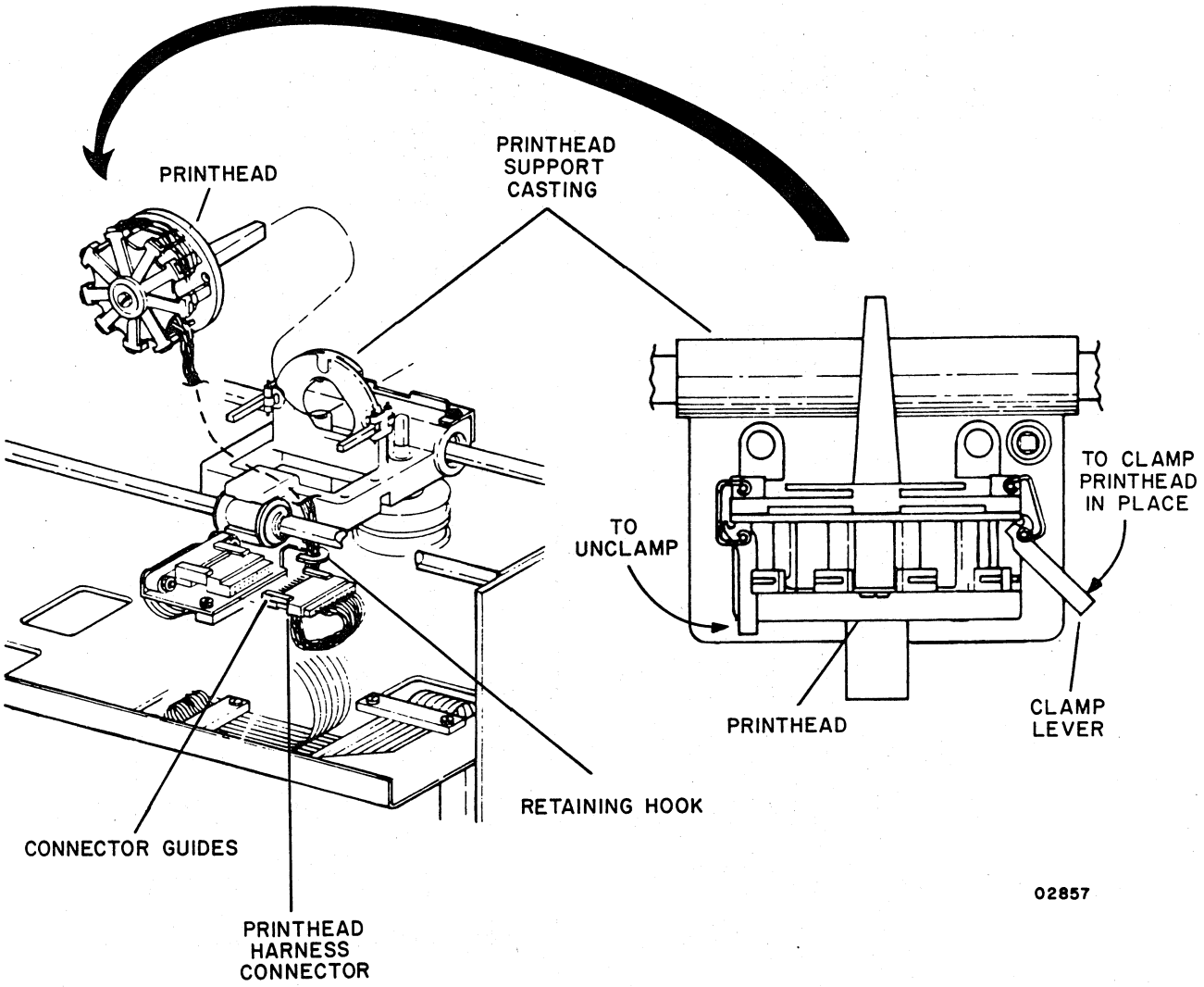

Figure 70IMP16. Printhead Replacement

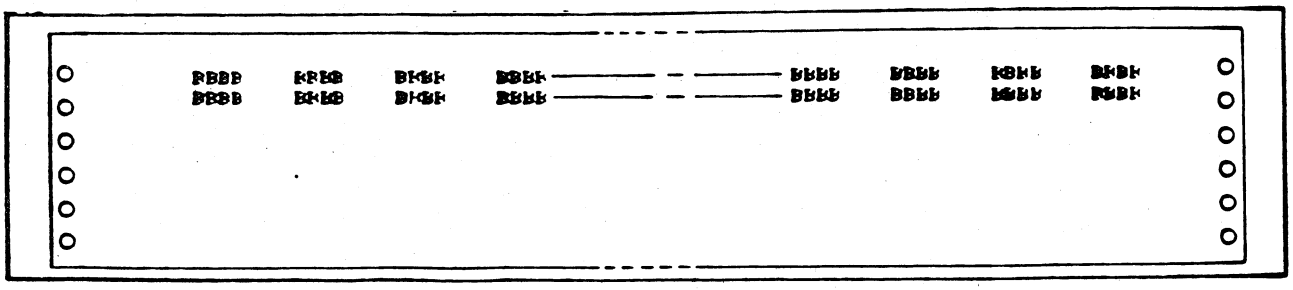

Figure 70IMP17. Test Print Sample

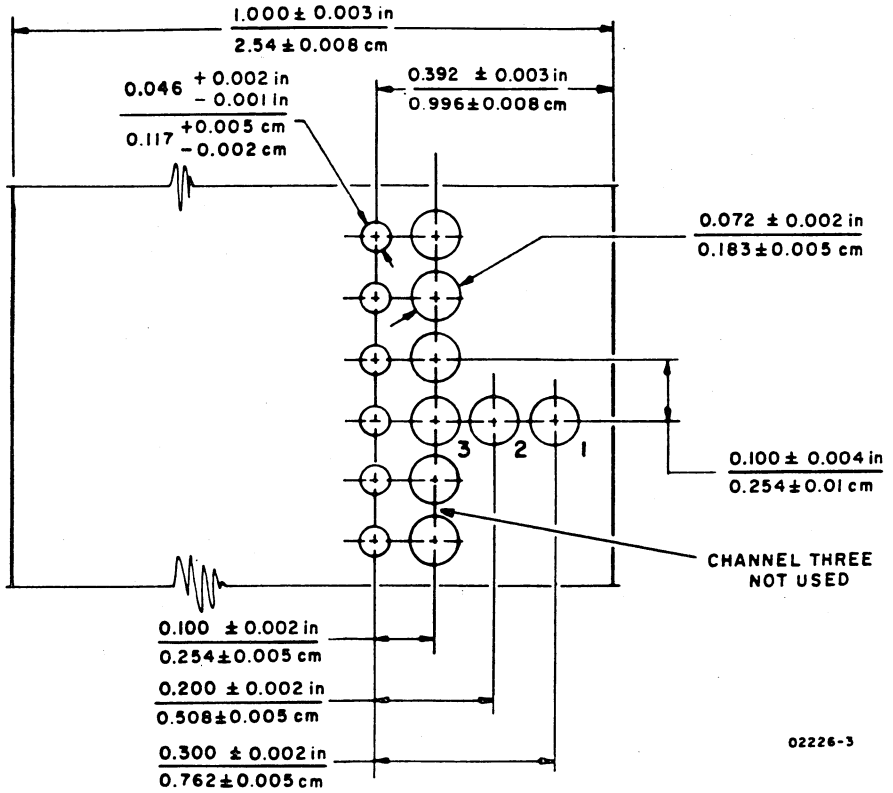

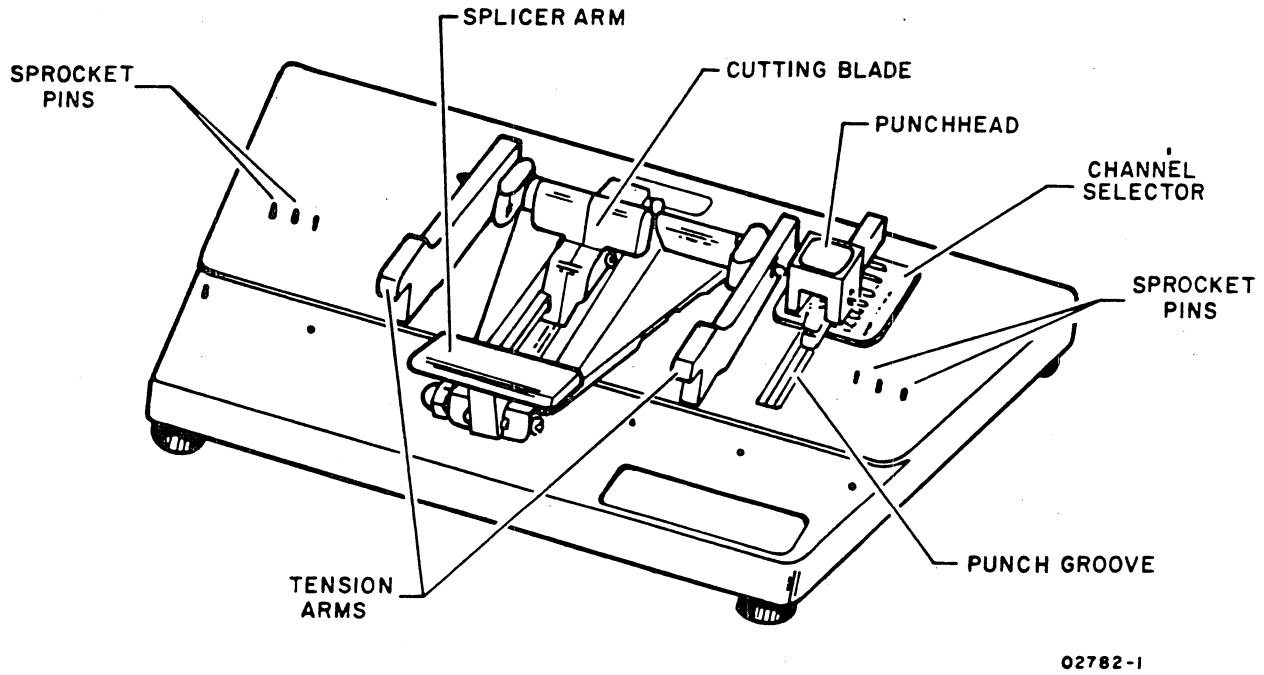

Figure 701MP18. Punching Format Tape

This section contains a genealogy chart, parts data, and spare parts data for the display terminal equipment.

GENEALOGY CHART

The genealogy chart for the display terminal equipment provides equipment configuration information for the various display terminals available in this series. The chart also identifies the subassemblies required to assemble the various terminals.

PARTS DATA

Assembly drawings and related parts lists clarify the appearance and the location of each part for only the display terminal equipment. For similar information on the nonimpact and impact printers, refer to their respective hardware maintenance and parts identification manuals (see preface).

Parts data shown in the genealogy chart for the display terminal appears in this section in the following order:

- Terminal top-level assembly
- Power supply
- Logic module
- Rear panel
- Keyboard
- Video display
- Front panel
- Monitor rear panel cable

Use the assembly drawings and parts lists to identify parts of the terminal in the following manner. First, locate the assembly drawing showing the part and identifying it with a Find Number (circled number). Then, use the Find Number to find the description and eight-digit part number of the part on the parts list associated with the assembly drawing. Table 7-1 explains the column headings found on the computer-generated Assembly Parts List.

TABLE 7-1. EXPLANATION OF COLUMN HEADINGS ON COMPUTER-GENERATED ASSEMBLY PARTS LISTS

COLUMN HEADING	EXPLANATION
FIND NO.	Identifies an electrical or mechanical part on an assembly drawing. If more than one listing appears for a find number, refer to LI, WK IN, and WK OUT.
LI (Line Item)	Gives a chronological or historical record of the addition of a new part to a find number. For example, 01 indicates that the part was the first one used, and 02 indicates the second, etc. See also WK IN and WK OUT.
PART NUMBER	Gives the Control Data Corporation part identification. Use this number when ordering replacements.
CD (Check Digit)	Gives the information-control system a means of cross-checking the correctness of a part number.
QUANTITY	Lists the total number of a part required to complete an assembly. The vertical line near the center of the column acts as a decimal point. Numbers to the left of the line are whole numbers. Those to the right of the line are tenths, hundredths, and thousandths.
U/M (Unit of Measure)	Indicates how the information-control system counts or supplies a part.
PART DESCRIPTION	Describes the physical appearance, type, or name of a part.
MC (Material Code)	Supplies additional descriptive data to the information-control system.
YLD (Yield)	A 2-digit number that indicates the usable portion of any quantity of parts expressed as a percentage.
ECO NO. IN	Engineering Change Order that adds a new part to an assembly. See also WK IN.
ECO NO. OUT	Engineering Change Order that deletes a part from an assembly. See also WK OUT.
S/N (Serial Number)	Used to specify an ECO's effectivity by serial number.
WK IN (Week In)	Lists the date when manufacturing begins using a new part and when it is available for parts replacement. For example, 7222 means a part is available as of the 22nd week of 1972.
WK OUT (Week Out)	Lists the date when manufacturing no longer uses a part in building an assembly. See also WK IN. Do not order a part after its week-out date.

00643-2

SPARE PARTS DATA

Spare parts data includes only those parts of an equipment that have been approved for on-site replacement. Each equipment spare parts list is also a recommendation of parts to have on hand at the service centers for support of on-site maintenance. Each list includes parts at both the modular and discrete component level.

This section supplies spare parts information for both the display terminal equipment and the nonimpact printer. For spare parts information for the impact printers refer to the applicable ORMIC spare parts listing. Refer to the Parts Data Manual (see preface) for illustrations of the appearance and/or location of these parts.

DWN	TRAUTMAN	12-3-76	CONTROL DATA CORPORATION	TITLE 752 Display Term.	PREFIX SPL	DOCUMENT NO 66300077 thru 66300082	REV P
CHKD	[illegible]	[illegible]					
ENG	[illegible]	[illegible]					
MFG	[illegible]	12/10/76		FIRST USED ON CC555A Thru CC555F		SHEET 1 of 4	
APPR	[illegible]	12-13-76	CODE IDENT 15920				

SHEET REVISION STATUS

4	3	2	1
A	A	A	A
B	A	A	B
B	C	A	C
D	D	A	D
D	E	A	E
D	F	A	F
G	G	G	G
G	H	G	H
G	J	G	J
K	J	G	K
K	L	G	L
M	L	G	M
N	L	G	N
P	L	G	P

REVISION RECORD

REV	ECO	DESCRIPTION	DRFT	DATE	APP
		Released Class "C"			
A	10653-77	RELEASED CLASS A		12/15/76	[illegible]
B	12096	F/N 22 WAS 61407657 F/N 23 WAS 61407656	[illegible]	3/29/77	[illegible]
C	12107	F/N 9 WAS 61407417	[illegible]	[illegible]	[illegible]
D	CD 12153	F/N 8 WAS 90460619 ADDED F/N 24	R	5/6/77	[illegible]
E	CD12626	REVISED PER ECO	R	1-23-77	[illegible]
F	CD 12795	REVISED PER ECO	J M	3-1-78	[illegible]
G	12702	REVISED PER ECO	R	4/6/78	[illegible]
H	12854	REVISED PER ECO	E.E.	4-20-78	[illegible]
J	12827	ADDED P/N TO F/N 16	WJG	5-19-78	[illegible]
K	12988	REVISED PER ECO	WJH	9-8-78	[illegible]
L	13101	CHG P/NS ON F/N 6,8 & 9	WJG 9-28-78	9-24-78	[illegible]
M	13164	REVISED PER ECO	WJG 1-24-79		[illegible]
N	13419	F/N 32 WAS 90460822	R	5/9/79	[illegible]
P	13344	F/N 22 WAS 90445991 F/N 23 WAS 90445992	WJG 6-7-79	6/20/79	[illegible]

NOTES:
SEE SHEET 2 FOR EQUIPMENT/TAB CROSS REFERENCE.

△1 △2 See chart on sheet 2 for Spare Parts/Series Code cross reference.

DETACHED LISTS

A43180 REV 8/71 PRINTED IN U.S.A.

CONTROL DATA CORPORATION	CODE IDENT 15920	SHEET 2	SPL	DOCUMENT NO 66300077	REV G

EQUIPMENT	SPL P/N	△1 Find No.s 17, 18 & 19	△2 Find No.s 32 & 33
CC555A	66300077	A01 and A02	A03 and above
CC555B	66300078	B01 and B02	B03 and above
CC555C	66300079	C01 and C02	C03 and above
CC555D	66300080	D01 and D02	D03 and above
CC555E	66300081	NONE	E01 and above
CC555F	66300082	NONE	F01 and above

A43185 PRINTED IN U.S.A.

CONTROL DATA		CODE IDENT 15920	SHEET 3	SPL	DOCUMENT NO. 66300077	REV. L

FIND NO.	PART IDENTIFICATION	QUANTITY REQUIRED 77	78	79	80	81	82	UNIT OF MEAS	NOMENCLATURE OR DESCRIPTION	SPECIFICATIONS, NOTES, OR MATERIAL
1	51908902	1	1	1	1	1	1		SONALERT	
2	51899703	1	1	1	1	1	1		FILTER, RFI, REAR PANEL	
3	51915101	1	1	1	1	1	1		KNOB, PLAIN	
4	51777300	6	6	6	6	6	6		SUPPORT LOGIC CARD (PLASTIC)	
5	61375200	1	1	1	1	1	1		CABLE ASSY - INTENSITY CONT	
6	51907303	1	1	1	1	1	1		CRT, 12 INCH	
7	61407419	1	1	1	1	1	1		CHOKE ASSY, DISPLAY	
8	90460619	1	1	1	1	1	1		MONITOR BOARD - 60ND-D	
9	61408075	1	1	1	1	1	1		TRANSFORMER, HIV, DISPLAY ASSY	
10	61407418	1	1	1	1	1	1		YOKE ASSY, DISPLAY	
11	61407857	1	1	1	1	1	1		CAP ASSY, CRT	
12										
13	15130504	1	1	1	1	1	1		IC CHIP VOLT REG.	
14	95637304	1	1	1	1	1	1		DIODE, VOLT REG.	
15	58018602	1	1	1	1	1	1		TRANSISTOR, VOLT REG.	
16	93418327	1	1	1	1	1	1		FUSE, 2A, 250V	
17	90460538	1	1	1	1				PC CARD, P/S, 6AFD-D	See Chart on sht. 2 for Series Code effectivity ⚠1
18	51915300	1	1	1	1				TRANSFORMER, P/S	
19	51785200	1	1	1	1				RECTIFIER, P/S	
20	95587003	1		1					CRT BRKR, 60HZ R PANEL	

AA3101 REV. 8/71 PRINTED IN U.S.A.

CONTROL DATA		CODE IDENT 15920	SHEET 4	SPL	DOCUMENT NO. 66300077	REV. P

FIND NO.	PART IDENTIFICATION	QUANTITY REQUIRED 77	78	79	80	81	82	UNIT OF MEAS	NOMENCLATURE OR DESCRIPTION	SPECIFICATIONS, NOTES, OR MATERIAL
21	95587002		1		1	1	1		CKT BRKR, 50HZ, R PANEL	
22	90446085	1	1			1			LOGIC PC ASSY 9ASD 1	
23	90446086			1	1		1		LOGIC PC ASSY 9ATD 1	
24	51777314	4	4	4	4	4	4		Support Plastic P.C.	Monitor Bd Support
25										
26	51915401			1	1				KEYBOARD, 80 KEY	
27	51917054	1	1	1	1	1	1		MAGNET 5.7 GAUSS	
28	51917051	1	1	1	1	1	1		MAGNET 2.0 GAUSS	
29	51917052	1	1	1	1	1	1		MAGNET 3.0 GAUSS	
30	51004063	1	1	1	1	1	1		ADHESIVE	
31	51917053	1	1	1	1	1	1		MAGNET 4.0 GAUSS	
32	90446105	1	1	1	1	1	1		PC Card, P/S, 9BBD	See chart on Sht 2 for Series Code effectivity ⚠2
33	51915301	1	1	1	1	1	1		Transformer, P/S	

AA3101 REV. 8/71 PRINTED IN U.S.A.

DWN	R. Trautman	10-26-77	CONTROL DATA CORPORATION	TITLE: MOD 1 DISPLAY TERM. W/O KYBD.	PREFIX: SPL	DOCUMENT NO: 66300763 thru 66300770	REV: G
CHKD	[illegible]	[illegible]					
ENG	[illegible]	[illegible]		FIRST USED ON: CC555G thru CC555L			
APPR	[illegible]	1-11-78	CODE IDENT: 15920			SHEET 1 of 4	

SHEET REVISION STATUS

4	3	2	1
—	—	—	—
01	01	-	01
A	A	A	A
B	B	A	B
B	C	A	C
D	D	D	D
E	D	D	E
F	D	D	F
G	D	D	G

REVISION RECORD

REV	ECO	DESCRIPTION	DRFT	DATE	APP
—	50000-42	RELEASED CLASS B	/	11-2-77	[illegible]
01	50212	REVISED PER ECO	[illegible]	1-13-78	[illegible]
A	12490-14	RELEASED CLASS "A"	/	1-17-78	[illegible]
B	12702	REVISED PER ECO	[illegible]	4/6/78	[illegible]
C	13101	CHG P/N'S OF F/N 8 & 9	WJG 9-28-78	9-29-78	[illegible]
D	13141	ADD CC555L	WJG 11-3-78	11/3/78	[illegible]
E	13164	CHG P/N 21,22	WJG 1-24-79		[illegible]
F	13419	F/N 29 WAS 90460822	R	5/10/79	[illegible]
G	13344	PL CHG'S ONLY	WJG 6-7-79	6/10/79	[illegible]

NOTES: SEE SHEET 2 FOR EQUIPMENT/TAB CROSS REFERENCE.

DETACHED LISTS

AA3180 REV 8/71 PRINTED IN U.S.A.

CONTROL DATA CORPORATION	CODE IDENT: 15920	SHEET 2	SPL	DOCUMENT NO: 66300763	REV: D

EQUIPMENT	SPL P/N	EQUIPMENT CONFIGURATOR	TOP LEVEL ASSEMBLY
CC555G	66300763	15630984	15630992
CC555H	66300764	15630985	15630993
CC555J	66300765	15630986	15630994
CC555K	66300766	15630987	15630995
CC555L	66300767	15632084	15632094
CC555M	66300768	15632085	15632095

AA3189 PRINTED IN U.S.A.

CONTROL DATA | CODE IDENT 15920 | SHEET 3 | SPL | DOCUMENT NO 66300763 | REV D

FIND NO	PART IDENTIFICATION	QUANTITY REQUIRED 63	64	65	66	67	68	UNIT OF MEAS	NOMENCLATURE OR DESCRIPTION	SPECIFICATIONS, NOTES, OR MATERIAL
1	51908702	1	1	1	1	1	1		SONALERT	
2	51899703	1	1	1	1	1	1		FILTER, RFI, REAR PANE	
3	51915101	1	1	1	1	1	1		KNOB, PLAIN	
4	51777300	6	6	6	6	6	6		SUPPORT LOGIC CARD (PLASTIC)	
5	61375200	1	1	1	1	1	1		CABLE ASSY-INTENSITY CONT	
6	51907300	1	1	1	1	1	1		CRT, 12 INCH	
7	61407417	1	1	1	1	1	1		CHOKE ASSY, DISPLAY	
8	90460617	1	1	1	1	1	1		PC CARD-6BND-0	
9	61408075	1	1	1	1	1	1		TRANSFORMER, HIV, DISPLAY ASSY	
10	61407418	1	1	1	1	1	1		YOKE ASSY, DISPLAY	
11	61407857	1	1	1	1	1	1		CAP ASSY, CRT	
12	15130504	1	1	1	1	1	1		IC CHIP VOLT REG	
13	95637304	1	1	1	1	1	1		DIODE, VOLT REG	
14	58018602	1	1	1	1	1	1		TRANSISTOR, VOLT REG	
15										
16										
17										
18										
19	95587003	1		1		1	1		CKT BRKR, 60HZ R PANEL	
20	95587002		1		1				CKT BRKR, 50HZ R PANEL	

AA2101 REV. 8/71 PRINTED IN U.S.A.

CONTROL DATA | CODE IDENT 15920 | SHEET 4 | SPL | DOCUMENT NO 66300763 | REV G

FIND NO	PART IDENTIFICATION	QUANTITY REQUIRED 63	64	65	66	67	68	UNIT OF MEAS	NOMENCLATURE OR DESCRIPTION	SPECIFICATIONS, NOTES, OR MATERIAL
21	90446085	1	1						LOGIC 9ASD	BASIC
22	90446086			1	1				LOGIC 9ATD	CURRENTLOOP
23	51777314	4	4	4	4	4	4		SUPPORT PLASTIC P.C.	MONITOR BD SUPPORT
24	51917054	1	1	1	1	1	1		MAGNET 5.7 GAUSS	
25	51917051	1	1	1	1	1	1		MAGNET 2.0 GAUSS	
26	51917052	1	1	1	1	1	1		MAGNET 3.0 GAUSS	
27	51004063	.1	.1	.1	.1	.1	.1	OZ	ADHESIVE	
28	51917053	1	1	1	1	1	1		MAGNET 4.0 GAUSS	
29	90446105	1	1	1	1	1	1		PC Card, P/S 9BBD	
30	51915301	1	1	1	1	1	1		Transformer, P/S	
31	90446087					1			LOGIC 9AUD	5/1 RS232
32	90446088						1		LOGIC 9AVD	5/1 CURRENT LOOP

AA2101 REV. 8/71 PRINTED IN U.S.A.

DWN	J.Wruck	10/75	CONTROL DATA	TITLE: SPL - LIAT MOD I	PREFIX: SPL	DOCUMENT NO: 66290100 THRU 66290121	REV: N
CHKD	R.Trautman	10/75					
ENG	J.Juelich	10/75					
MFG	N.Albaugh	6/76		FIRST USED ON: CC5B1A THRU CC5B1T		SHEET 1 of 6	
APPR			CODE IDENT: 15920				
CE	B.Bayer	6/76					

SHEET REVISION STATUS

6	5	4	3	2	1
J	L	J	J	J	L
M	L	M	J	J	M
N	L	N	J	J	N

REVISION RECORD

REV	ECO	DESCRIPTION	DRFT	DATE	APP
L	12221	RETYPED SHT 1 - REVISED PER ECO	[illegible]	[illegible]	[illegible]
M	12988	REVISED PER ECO	WJB	9-8-78	
N	13164	REVISED PER ECO	WJG 1-24-79		

NOTES:
SEE SHEET 2 FOR EQUIPMENT/TAB CROSS REFERENCE.
△1 △2 See chart on sheet 2 for spare parts/series code cross reference.

DETACHED LISTS

AA3185 REV. 9-71

PRINTED IN U.S.A.

CONTROL DATA	CODE IDENT: 15920	SHEET 2	SPL	DOCUMENT NO.: 66290100	REV: J

EQUIPMENT	SPL P/N	△1 Find nos 17, 18 & 19	△2 Find nos 36 & 37
CC5B1A	66290100	A01 thru A05	A06 and above
CC5B1B	66290101	B01 thru B04	B05 and above
CC5B1C	66290102	C01 thru C05	C06 and above
CC5B1D	66290103	D01 thru D04	D05 and above
CC5B1E	66290104	E01 thru E02	E03 and above
CC5B1F	66290105	F01 thru F04	F05 and above
CC5B1G	66290106	G01 thru G02	G03 and above
CC5B1H	66290107	H01 thru H04	H05 and above
CC5B1J	66290108	J01 thru J05	J06 and above
CC5B1K	66290109	K01 thru K02	K03 and above
CC5B1L	66290110	L01 thru L05	L06 and above
CC5B1M	66290111	M01 thru M04	M05 and above
CC5B1N	66290112	N01 thru N05	N06 and above
CC5B1P	66290113	P01 thru P02	P03 and above
CC5B1R	66290114	R01 thru R04	R05 and above
CC5B1S	66290115	S01 thru S04	S05 and above
CC5BIT	66290116	NONE	T01 and above

AA3185

PRINTED IN U.S.A.

CONTROL DATA		CODE IDENT 15920	SHEET 3	SPL	DOCUMENT NO. 66290100	REV 3

FIND NO	PART IDENTIFICATION	QUANTITY REQUIRED 00	01	02	03	04	05	06	07	08	09	UNIT OF MEAS		NOMENCLATURE OR DESCRIPTION	SPECIFICATIONS, NOTES, OR MATERIAL
1	51908902	1	1	1	1	1	1	1	1	1	1			SONALERT	
2	51899703	1	1	1	1	1	1	1	1	1	1			FILTER, RFI, REAR PANEL	
3	51915101	1	1	1	1	1	1	1	1	1	1			KNOB, PLAIN	
4	51777300	6	6	6	6	6	6	6	6	6	6			SUPPORT LOGIC CARD (PLASTIC)	
5	61375200	1	1	1	1	1	1	1	1	1	1			CABLE ASSY_INTENSITY CONT	
6	51907303	1	1	1	1	1	1	1	1	1	1			CRT, 12 INCH	
7	61407419	1	1	1	1	1	1	1	1	1	1			CHOKE ASSY, DISPLAY	
8	90460619	1	1	1	1	1	1	1	1	1	1			PC CARD, DISPLAY, 6BND	
9	61408075	1	1	1	1	1	1	1	1	1	1			TRANSFORMER, HIV, DISPLAY ASSY	
10	61407418	1	1	1	1	1	1	1	1	1	1			YOKE ASSY, DISPLAY	
11	61407857	1	1	1	1	1	1	1	1	1	1			CAP ASSY, CRT	
12	93418327	1	1	1	1	1	1	1	1	1	1			Fuse 2.0 Amp 250V	
13	15130504	1	1	1	1	1	1	1	1	1	1			IC CHIP VOLT REG	
14	95637304	1	1	1	1	1	1	1	1	1	1			DIODE, VOLT REG	
15	58018602	1	1	1	1	1	1	1	1	1	1			TRANSISTOR, VOLT REG	
16															
17	90460538	1	1	1	1	1	1	1	1	1	1			PC CARD, P/S, 6AFD-0	See chart on sht 2 for Series Code effectivity △1
18	51915300	1	1	1	1	1	1	1	1	1	1			TRANSFORMER, P/S	
19	51785200	1	1	1	1	1	1	1	1	1	1			RECTIFIER, P/S	
20	95587003	1		1		1		1		1				CKT BRKR, 60HZ R PANEL	

AA3181 REV. 8/71 PRINTED IN U.S.A.

CONTROL DATA		CODE IDENT 15920	SHEET 4	SPL	DOCUMENT NO. 66290100	REV N

FIND NO.	PART IDENTIFICATION	QUANTITY REQUIRED 00	01	02	03	04	05	06	07	08	09	UNIT OF MEAS		NOMENCLATURE OR DESCRIPTION	SPECIFICATIONS, NOTES, OR MATERIAL
21	95587002		1		1		1		1		1			CKT BRKR, 50HZ, R PANEL	
22	90445987	1	1	1	1									LOGIC PC ASSY 6ABD-1	
23	90445988					1	1	1	1					LOGIC PC ASSY 6ACD-2	
24	90445989									1	1			LOGIC PC ASSY 6ADD-2	
25	90445990													LOGIC PC ASSY 6AED-2	
26	51915400	1	1			1	1			1	1			KEYBOARD, BASIC, 67 KEY	
27	51915401			1	1			1	1					KEYBOARD, EXP, 80 KEY	
28	51917050	1	1	1	1	1	1	1	1	1	1			Magnet 1.5 Gauss	
29	51917051	1	1	1	1	1	1	1	1	1	1			Magnet 2.0 Gauss	
30	51917052	1	1	1	1	1	1	1	1	1	1			Magnet 3.0 Gauss	
31	51004063	.1	.1	.1	.1	.1	.1	.1	.1	.1	.1	OZ		Adhesive	
32															
33															
34	51777314	4	4	4	4	4	4	4	4	4	4			Sprt Ckt Bd 3/16 Nylon	
35	51908602	1	1	1	1	1	1	1	1	1	1			Thms Disc 2.5 ohm	
36	90460822	1	1	1	1	1	1	1	1	1	1			PC Card, P/S 7BKD	See chart on sht 2 for Series Code effectivity △2
37	51915301	1	1	1	1	1	1	1	1	1	1			Transformer, P/S	

AA3181 REV. 8/71 PRINTED IN U.S.A.

CONTROL DATA			CODE IDENT 15920	SHEET 5	SPL	DOCUMENT NO 662901OO	REV L

FIND NO	PART IDENTIFICATION	QUANTITY REQUIRED 10	11	12	13	14	15	16	UNIT OF MEAS	NOMENCLATURE OR DESCRIPTION	SPECIFICATIONS, NOTES, OR MATERIAL
1	51908902	1	1	1	1	1	1	1		SONALERT	
2	51899703	1	1	1	1	1	1	1		FILTER, RFI, REAR PANEL	
3	51915101	1	1	1	1	1	1	1		KNOB, PLAIN	
4	51777300	6	6	6	6	6	6	6		SUPPORT, LOGIC CARD (PLASTIC)	
5	61375200	1	1	1	1	1	1	1		CABLE ASSY-INTENSITY CONT	
6	51907303	1	1	1	1	1	1	1		CRT, 12 INCH	
7	61407419	1	1	1	1	1	1	1		CHOKE ASSY, DISPLAY	
8	90460619	1	1	1	1	1	1			PC CARD, DISPLAY, 6BND	
9	61408075	1	1	1	1	1	1	1		TRANSFORMER, HI V, DISPLAY ASSY	
10	61407418	1	1	1	1	1	1			YOKE ASSY, DISPLAY	
11	61407857	1	1	1	1	1	1	1		CAP ASSY, CRT	
12	93418327	1	1	1	1	1	1	1		FUSE 2.0 AMP 250V	
13	15130504	1	1	1	1	1	1	1		IC CHIP VOLT REG	
14	95637304	3	3	3	3	3	3	3		DIODE, VOLT REG	
15	58018602	1	1	1	1	1	1	1		TRANSISTOR, VOLT REG	
16											
17	90460538	1	1	1	1	1	1			PC CARD, P/S, 6AFD-0	See chart on sht 2 for Series Code effectivity △1
18	51915300	1	1	1	1	1	1			TRANSFORMER, P/S	
19	51785200	1	1	1	1	1	1			RECTIFIER, P/S	
20	95587003	1		1		1		1		CKT, BRKR, 60HZ, R PANEL	

AA3181 REV. 8-71 PRINTED IN U.S.A.

CONTROL DATA			CODE IDENT 15920	SHEET 6	SPL	DOCUMENT NO. 66290100	REV. N

FIND NO.	PART IDENTIFICATION	QUANTITY REQUIRED 10	11	12	13	14	15	16	UNIT OF MEAS	NOMENCLATURE OR DESCRIPTION	SPECIFICATIONS, NOTES, OR MATERIAL
21	95587002		1		1		1			CKT BRKR, 50 HZ, R PANEL	
22	90445987							1		LOGIC PC ASSY 6ABD-1	
23	90445988									LOGIC PC ASSY 6ACD-2	
24	90445989	1	1							LOGIC PC ASSY 6ADD-2	
25	90445990			1	1	1	1			LOGIC PC ASSY 6AED-2	
26	51915400			1	1					KEYBOARD, BASIC, 67 KEY	
27	51915401	1	1			1	1	1		KEYBOARD, EXP, 80 KEY	
28	51917050	1	1	1	1	1	1			Magnet 1.5 Gauss	
29	51917051	1	1	1	1	1	1			Magnet 2.0 Gauss	
30	51917052	1	1	1	1	1	1			Magnet 3.0 Gauss	
31	51004063	.1	.1	.1	.1	.1	.1		oz	Adhesive	
32	61407848							1		Yoke Assy, Display	
33	90460775							1		PC Card, Display, 7APD	
34	51777314	4	4	4	4	4	4	4		SPT CKT BD 3/16" NYLON	
35	51908602	1	1	1	1	1	1	1		THMS, DISC 2.5 OHM	
36	90460622	1	1	1	1	1	1	1		PC Card, P/S 7BKD	See chart on sht 2 for Series Code effectivity △2
37	51915301	1	1	1	1	1	1	1		Transformer, P/S	

AA3181 REV. 8 71 PRINTED IN U.S.A.

DWN	V. Bagley	3/78	CONTROL DATA	TITLE: SPARE PARTS LIST, TYPEWRITER KEYBOARDS	PREFIX: SPL	DOCUMENT NO: 66300716/18	REV: B
CHKD	V. Bagley	3/78					
ENG							
MFG				FIRST USED ON: CA148-B, CA148-D, CA148-E, CA150-B, CA150-D, CA150-E, CA151-B, CA151-D		SHEET 1 of 3	
APPR	E. M. Noe	3-28-78	CODE IDENT				

SHEET REVISION STATUS

3	2	1A	1
A	A	A	A
A	A	B	B

REVISION RECORD

REV	ECO	DESCRIPTION	DRFT	DATE	APP
A	12490-15	RELEASED CLASS A	/	4-7-78	MCK
B	13141	ADD CA148-E AND CA150-E	WLG	11-2-78	DSP

NOTES:
1. USE SPL 66300716 FOR KEYBOARD 51917735, 83-KEY.
   USE SPL 66300717 FOR KEYBOARD 51917736, 98-KEY.
   USE SPL 66300718 FOR KEYBOARD 51917737, 104-KEY.
2. TOP LEVEL ASSY — SEE SHEET 1A
3. EQUIPMENT CONFIGURATOR — SEE SHEET 1A.

DETACHED LISTS

AA3NC REV. 8 71 PRINTED IN U.S.A.

TITLE: SPARE PARTS LIST, TYPEWRITER KEYBOARDS	PREFIX: SPL	DOCUMENT NUMBER: 66300716/18	SHEET: 1A	REVISION: B

KEYBOARD 51917735, 83-KEY

Equipment No. CA150-B

EC 15630974
TLA 15630975

Equipment No. CA150E

EC 15632086
TLA 15632096

Equipment No. CA150-D

EC 15631259
TLA 15631260

KEYBOARD 51917736, 98-KEY

Equipment No. CA151-B

EC 15630939
TLA 15630940

Equipment No. CA151-D

EC 15631261
TLA 15631262

KEYBOARD 51917737, 104-KEY

Equipment No. CA148-B

EC 15630934
TLA 15630935

Equipment No. CA148E

EC 15632089
TLA 15632099

Equipment No. CA148-D

EC 15631257
TLA 15631258

CONTROL DATA	SPARE PARTS LIST, TYPEWRITER KEYBOARDS	CODE IDENT 15920	SHEET 2	SPL	DOCUMENT NO. 66300716/18	REV. A

FIND NO.	PART IDENTIFICATION	QUANTITY REQUIRED 16	17	18	UNIT OF MEAS	NOMENCLATURE OR DESCRIPTION	SPECIFICATIONS, NOTES, OR MATERIAL
1	51917735	1	0	0	PC	KEYBOARD ASSY	83-KEY
2	51917736	0	1	0		KEYBOARD ASSY	98-KEY
3	51917737	0	0	1		KEYBOARD ASSY	104-KEY
4	39389700	1	1	1		IC 7404	146
5	88897000	1	1	1		IC 7408	201
6	50254300	3	3	3		IC 74123	193
7	88885600	4	4	4		IC 7437	210
8	66305690	1	0	0		MOS (ROM)	
9	66305691	0	1	0		MOS (ROM)	
10	66305692	0	0	1		MOS (ROM)	
11	51848400	1	1	1		SOCKET, 40-PIN	
12	66305693	1	2	1		SWITCH, MODULE	MOMENTARY, LIGHTED 10°
13	66299881	1	0	1		SWITCH, MODULE	FIXED, LIGHTED
14	66299882	1	1	1		SWITCH, MODULE	MOMENTARY, ST. STEM
15	66299880	2	2	2		SWITCH, MODULE	MOMENTARY, "T" STYLE
16	66299883	76	90	96		SWITCH, MODULE	MOMENTARY, 10°, "T" STYLE
17	66305694	1	0	0		SWITCH, MODULE	MOMENTARY, 10°, BLADED STEM
18	66299896	1	2	2		SWITCH, MODULE	ALTERNATING, ACTION, LIGHTED
19	66299884	0	1	1		SWITCH, MODULE	ALTERNATING ACTION, 10°
20	66299893	3	4	4	PC	LED (DIODE)	RED

AA3181 REV. 8/71 PRINTED IN U.S.A.

CONTROL DATA	SPARE PARTS LIST, TYPEWRITER KEYBOARDS	CODE IDENT 15920	SHEET 3	SPL	DOCUMENT NO. 66300716/18	REV. A

FIND NO.	PART IDENTIFICATION	QUANTITY REQUIRED 16	17	18	UNIT OF MEAS	NOMENCLATURE OR DESCRIPTION	SPECIFICATIONS, NOTES, OR MATERIAL
21	66300719	1	0	0	PC	KEYCAP SET	83-KEY
22	66300720	0	1	0	PC	KEYCAP SET	98-KEY
23	66300721	0	0	1	PC	KEYCAP SET	104-KEY

AA3181 REV. 8/71 PRINTED IN U.S.A.

DWN	G CHURCH	10-14-75	CONTROL DATA	TITLE	PREFIX	DOCUMENT NO.	REV
CHKD				SPL PRINTER, SERIAL, THERMAL 60 Hz	SP	66294800	F
ENG	G Church	10/14/75					
MFG	P Pergman	10.15.75		FIRST USED ON			
APPR	K [illegible]	10/14/75	CODE IDENT	CL114		SHEET 1 of 2	
E2	B. [illegible]	10/14/75	15920				

SHEET REVISION STATUS

2	1
A	A
B	B
C	C
D	D
E	E
F	F

REVISION RECORD

REV	ECO	DESCRIPTION	DRFT	DATE	APP
A	10842-26	RELEASED CLASS A	—	10/15/75	M.G.T.
B	CD11311	REVISED PER ECO	[illegible]	2/12/76	[illegible]
C	CD12225	REVISED PER ECO	[illegible]	6/21/77	[illegible]
D	13322	P/N 66295670 WAS 66295602	WJG 1-30-79	1-31-79	MCG
E	13515	CHG PG. 1 AND 2	[illegible] 7/23/79	7-30-79	MCG
F	14119	REVISED PER ECO	MD 6-11-80	6-11-80	MCG

NOTES:

1 On site spare parts list for 60 Hz printer {CDC Dwg $19093xx} with Parity-Switch selectable.

2 To be used only in series code 03 and above units

DETACHED LISTS

AA3180 REV. 8/71 PRINTED IN U.S.A.

CONTROL DATA	SPARE PARTS LIST OF CL114	CODE IDENT 15920	SHEET 2 of 2	PL	DOCUMENT NO. 66274800	REV. F

FIND NO.	PART IDENTIFICATION	QUANTITY REQUIRED	2	UNIT OF MEAS	NOMENCLATURE OR DESCRIPTION	SPECIFICATIONS, NOTES, OR MATERIAL
1	66295666	1	1		Board Plug-In {Signal}	
2	66295670	1			Board Plug-In {Control}	
3	66295667	1			Frame Final Assy.	{Prntr Mech, Par Sw with Logic Bds}
4	66295604	1	1		Power Supply {60 Hz}	
5	66295671		1		Frame final assy with detachable cable	{prntr mech, par sw with logic bds}
6	66295672		1		Cable - interconnect	Detachable cable for prntr mech.
7	66295674		1		Board plug-In{Control}	
8	66295639	1			FUSE HOLDER	BODY AND CAP

AA3181 REV. 8/71 PRINTED IN U.S.A.

DWN	G. CHURCH	10 14 75	CONTROL DATA	TITLE	PREFIX	DOCUMENT NO.	REV
CHKD				SPL PRINTER, SERIAL, THERMAL 50 Hz	SP	66294700	F
ENG	[illegible]	10-14-75					
MFG	[illegible]	10-15-75		FIRST USED ON			
APPR	[illegible]	10/14/75	CODE IDENT 15920	CL114		SHEET 1 of 2	
E.S.	[illegible]	[illegible]					

SHEET REVISION STATUS

REVISION RECORD

1	2	REV	ECO	DESCRIPTION	DRFT	DATE	APP
A	A	A	10842-26	RELEASED CLASS A	—	10/15-75	[illegible]
B	B	B	CD11311	REVISED PER ECO	[illegible]	2/12/76	[illegible]
C	C	C	CD12225	REVISED PER ECO	[illegible]	6/21/77	[illegible]
D	D	D	13322	P/N 66295670 WAS 66295602	WJG 1-30-79	1-31-79	[illegible]
E	E	E	13515	CHG PG 14-2 PER ECO	BR 2/21/79	7-30-79	[illegible]
F	F	F	14119	REVISED PER ECO	MD 6-11-80	6-11-80	[illegible]

NOTES:

1. On site spare parts list for 50 Hz printer {CDC Dwg 519093xx} with Parity-Switch selectable.

2. To be used only in series code 03 and above units.

DETACHED LISTS

AA3180 REV. 8/71 PRINTED IN U.S.A.

CONTROL DATA	SPARE PARTS LIST FOR CL114	CODE IDENT 15920	SHEET 2 of 2	PL	DOCUMENT NO. 66294700	REV. F

FIND NO.	PART IDENTIFICATION	QUANTITY REQUIRED	2	UNIT OF MEAS	NOMENCLATURE OR DESCRIPTION	SPECIFICATIONS, NOTES, OR MATERIAL
1	66295666	1	1		Board Plug-In {Signal}	
2	66295670	1			Board Plug-In {Control}	
3	66295667	1			Frame Final Assy.	{Pntr Mech, Par Sw with logic bds.}
4	66295605	1	1		Power Supply {50 Hz}	
5	66295671		1		Frame final assy with detachable cable	{Pntr. Mech, PAR Sw with logic bds.}
6	66295672		1		Cable- interconnect	Detachable cable for pntr. mech.
7	66295674		1		Board plug-In {Control}	
8	66295639	1			FUSE HOLDER	BODY AND CAP

AA3181 REV. 8/71 PRINTED IN U.S.A.

60 Hz	50 Hz	CURRENT LOOP	FTZ SHIELDING	EQ DESIGNATION	EC	TLA
X				CC555A	15630400	15630500
	X		X	CC555B	15630401	15630501
X		X		CC555C	15630402	15630502
	X	X	X	CC555D	15630403	15630503
	X			CC555E	15630404	15630504
	X	X		CC555F	15630405	15630505

SHEET REVISION STATUS	REVISION RECORD						
	REV	CO	DESCRIPTION	DRFT	DATE	CHKD	APP
	M	13344	REVISED PER ECO	WJG	6-7-79	WJG	[illegible]

- EC DISPLAY TERM MODEL 1
  - TLA (TABULATED) DISPLAY TERM 156305XX
    - TRANSFORMER (PWR SUPPLY) 51915301
    - PC ASSY 98BD (PWR SUPPLY) 90446105
    - W/L PWR SUPPLY 61407980
    - CABLE ASSY INTERNAL KYBD 61402300
    - GROUND WIRE ASSEMBLY 61391105, 61391106
    - CABLE ASSY DC POWER 61402400
    - KEYBOARD ASSY (ONE ONLY)
      - KEYBOARD ASSY 80 KEY 61402100
        - CABLE ASSY KEYBOARD EXT 61370500
      - KEYBOARD ASSY 80 KEY SHIELDED 61407539
        - CABLE ASSY KEYBOARD EXT 61407519
    - VIDEO DISPLAY ASSY 61407969
      - PC ASSY 68ND-0 90960619
      - +15V REG ASSY 61407617
      - W/L +15V REGULATOR 61407618
      - YOKE ASSY 61407418
        - CLIP GROUND CRT 71492174
      - CRT SOCKET ASSY 61407857
      - W/L VIDEO DISPLAY 61407979
      - CHOKE ASSY 61407419
      - H.V. TRANSFORMER ASSY 61408075
      - CABLE ASSY VIDEO DISPLAY 61407420
      - GROUND WIRE ASSY 61391111
    - FRONT PANEL ASSY 61407552
      - CABLE ASSY INT. 61375200
    - CABLE ASSY, REAR PANEL MONITOR ASSY 61407631
    - REAR PANEL ASSY (ONE ONLY)
      - REAR PANEL ASSY 60 HZ 61408216
        - W/L REAR PANEL 60 HZ 61408220
        - PC CARD ASSY, REAR PANEL 90445796
      - REAR PANEL ASSY 50 HZ 61408215
        - W/L REAR PANEL 50 HZ 61408219
        - PC CARD ASSY, REAR PANEL 90445796
    - LOGIC MODULE ASSY (ONE ONLY)
      - LOGIC MODULE BASIC 61407857
        - LOGIC PC ASSY 9ASD 90446085
      - LOGIC MODULE WITH CL 61407656
        - LOGIC PC ASSY 9ATD 90446086

REFERENCE DOCUMENTS

ENGINEERING SPECIFICATION	16042734
KEYBOARD SPECIFICATION	51915400
RASTER SCAN CRT SPECIFICATION	16035100
POWER SUPPLY SPECIFICATION	16039400
SCHEMATIC DIAGRAM, VIDEO DISPLAY	62201017
AC/DC POWER INTERCONNECTION DIAGRAM	62199500
SIGNAL INTERCONNECTION DIAGRAM	62200946
LOGIC DIAGRAM	62200824 OR 62201031
SPARE PARTS LIST	66300077 THRU 66300082
GEOMETRIC DISTORSION SPECIFICATIONS	16042739
PCC LAYOUT SPECIFICATION	16040800

REFERENCE DRAWING

CONTROL DATA

FIRST USED ON	CC555A THRU F	
DWN	D. WELLS	11-4-76
CHKD		
ENGR		
MFG		
APPR		12-10-76

COMPONENTS, EXCEPT AS NOTED: TOLERANCE, VALUE, RATING; RES, CAP

TITLE: GENEALOGY CHART 752 DISPLAY

CODE IDENT 13920 | C | DRAWING NO 66300072

SCALE | CROSS REF NO | SHEET / OF /

62957400 F

SEL STOP BITS ⚠1	60 Hz	50 Hz	CURRENT LOOP	FTZ SHIELDING	EQ DESIGNATION	EC	TLA
	X				CC555G	15630984	15630992
		X		X	CC555H	15630985	15630993
	X		X		CC555J	15630986	15630994
		X	X	X	CC555K	15630987	15630995
X	X				CC555L	15632084	15632094
X	X		X		CC555M	15632085	15632095

SHEET REVISION STATUS

REVISION RECORD						
REV	CO	DESCRIPTION	DRFT	DATE	CHKD	APP
–	50000-32	RELEASED CLASS		11-2-77		MCK
J1	50212	REVISED PER ECO	WJG	1-13-78		W
A	12490-14	RELEASED CLASS "A"		1-18-78		MCK
B	12702	REVISED PER ECO	WJG	4-4-78		WJG
C	12870	REVISED PER ECO	WJG	8-9-78		WJG
D	13101	REVISED PER ECO	WJG	9-28-78		WJG
E	13141	REVISED PER ECO	WJG	11-3-78		WJG
F	13164	REVISED PER ECO	WJG	1-24-79	WJG	
G	13419	REVISED PER ECO	WJG	5-10-79		
H	13344	REVISED PER ECO	WJG	6-7-79	WJG	

- EC DISPLAY TERM MOD I
- TLA DISPLAY TERM
- TRANSFORMER (POWER SUPPLY) 51915301
- PC ASSY 9880 (POWER SUPPLY) 90446105
- W/L POWER SUPPLY 61407980
- CABLE ASSY INTERNAL KYBD 61402300
- GROUND WIRE ASSEMBLY 61391105, 61391106
- CABLE ASSY DC POWER 61402400
- VIDEO DISPLAY ASSY 61407969
- CLIP GROUND CRT 71492174
- PC ASSY 6BND-0 90460619
- +15V REG ASSY 61407617
- W/L +15V REGULATOR 61407618
- YOKE ASSY 61407418
- CRT SOCKET ASSY 61407857
- W L VIDEO DISPLAY 61407979
- CHOKE ASSY 61407419
- H. V. TRANSFORMER ASSY 61408075
- CABLE ASSY VIDEO DISPLAY 61407420
- GROUND WIRE ASSY 61391111
- FRONT PANEL ASSY 61407552
- CABLE ASSY INT. 61375200
- CABLE ASSY, REAR PANEL MONITOR ASSY 61407631
- REAR PANEL ASSY (ONE ONLY)
  - REAR PANEL ASSY 60 HZ 61408216
    - W/L REAR PANEL 60 HZ 61408220
    - PC CARD ASSY, REAR PANEL 90445796
  - REAR PANEL ASSY 50 HZ 61408215
    - W/L REAR PANEL 50 HZ 61408219
    - PC CARD ASSY, REAR PANEL 90445796
- LOGIC MODULE ASSY (ONE ONLY)
  - LOGIC MODULE BASIC 61407657
    - LOGIC PC ASSY 9ASD 90446085
  - LOGIC MODULE WITH CL 61407656
    - LOGIC PC ASSY 9ATD 90446086
  - LOGIC MODULE (BASIC S/I) 61408367 ⚠2
    - LOGIC PC ASSY 9AUD 90446087
  - LOGIC MODULE (WITH C/L S/I) 61408368 ⚠2
    - LOGIC PC ASSY 9AVD 90446088

REFERENCE DOCUMENTS

ENGINEERING SPECIFICATION	16042734
KEYBOARD SPECIFICATION	51915400 (51917735
RASTER SCAN CRT SPECIFICATION	16035100
POWER SUPPLY SPECIFICATION	16039400
SCHEMATIC DIAGRAM, VIDEO DISPLAY	62201017
AC/DC POWER INTERCONNECTION DIAGRAM	62199500
SIGNAL INTERCONNECTION DIAGRAM	62200946
LOGIC DIAGRAM	62200824 OR 62201031 ⚠2
SPARE PARTS LIST	66300763 THRU 663007888
GEOMETRIC DISTORTION SPECIFICATIONS	16042739
PCC LAYOUT SPECIFICATION	16040800

NOTES:

⚠1 SELECTABLE STOP BITS FEATURE AND SPECIAL ENCLOSURE COLOR

⚠2 LOGIC DIAGRAM 62201025 IS USED ON MODELS CC555L AND M.

REFERENCE DRAWING

COMPONENTS, EXCEPT AS NOTED

	TOLERANCE	VALUE	RATING
RES			
CAP			

CONTROL DATA

FIRST USED ON	CC555G THRU M	
DWN	R. Trautman	10-29-77
CHKD		
ENGR		11/21/77
MFG		1/11/78
APPR		1-13-78

TITLE: GENEALOGY CHART MOD I DISPLAY W/O KEYBOARD

CODE IDENT 15920 | C | DRAWING NO 66300771

SCALE | CROSS REF NO | SHEET / OF /

66300771

7-15

SHEET REVISION STATUS	REVISION RECORD						
	REV	CO	DESCRIPTION	DRFT	DATE	CHKD	APP
	–	50000-90	RELEASED CLASS "B"	/	11-1-77	/	MCK
	A	12490-13	RELEASED CLASS "A"	/	1-12-78	/	MCK

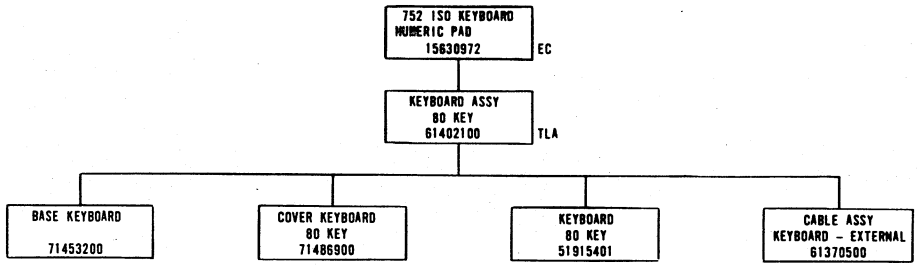

REFERENCE DOCUMENTS

SPARE P/L	66290100
EQUIPMENT MANUAL	62957300
ENGINEERING SPEC	16042790

REFERENCE DRAWING			
COMPONENTS, EXCEPT AS NOTED	TOLERANCE	VALUE	RATING
RES			
CAP			

FIRST USED ON	CA 150 A	
DWN	[redacted]	10-21-77
CHKD	E. Greene	10/25/77
ENGR	[redacted]	10/27/77
MFG	[redacted]	10/31/77
APPR	[redacted]	1-11-78

TITLE: GENEALOGY CHART

CODE IDENT 15920 | C | DRAWING NO 66300756

SCALE | CROSS REF NO | SHEET / OF /

66300756

[redacted]

SHEET REVISION STATUS	REVISION RECORD						
	REV	CO	DESCRIPTION	DRFT	DATE	CHKD	APP
	—	[illegible]	RELEASED CLASS E		[illegible]	[illegible]	[illegible]
	A	12495-15	RELEASED UNDER K	[illegible]	[illegible]	[illegible]	[illegible]
	B	3141	REVISED PER ECO	WJG	11-3-76	[illegible]	[illegible]

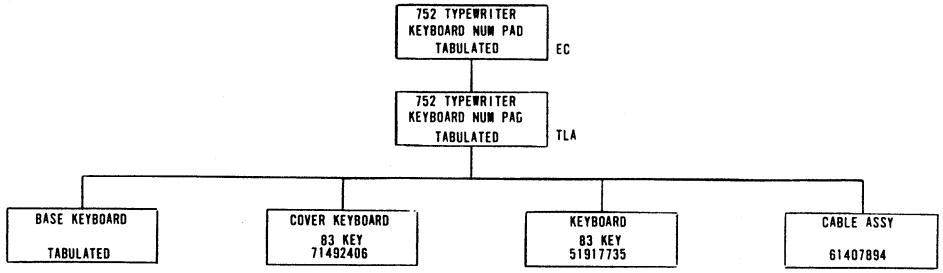

TABULATION

EC	TLA	BASE KEYBOARD
CA150B 15630974	15630975	71453200
CA150E 15632086	15632096	71492720

REFERENCE DOCUMENTS

SPARE P L 66300716
EQUIPMENT MANUAL 62957300
ENGINEERING SPEC 16042790

REFERENCE DRAWING	CONTRO DATA		
	FIRST USED ON	CA 150 B	
	DWN	[illegible]	10/5/77
	CHKD	[illegible]	10/5/77
	ENGR	[illegible]	10/31/77
	MFG	[illegible]	[illegible]
	APPR	[illegible]	5-20-78

COMPONENTS, EXCEPT AS NOTED

	TOLERANCE	VALUE	RATING
RES			
CAP			

TITLE: GENEALOGY CHART
83 KEY KYBD

CODE IDENT 15920 | C | DRAWING NO 66300757

SCALE | CROSS REF NO | SHEET / OF /

SHEET REVISION STATUS	REVISION RECORD						
	REV	CO	DESCRIPTION	DRFT	DATE	CHKD	APP
	—	50000-90	RELEASED CLASS "B"	/	11-1-77	/	[illegible]
	A	2490-13	RELEASED CLASS "A"	/	1-12-78	/	[illegible]

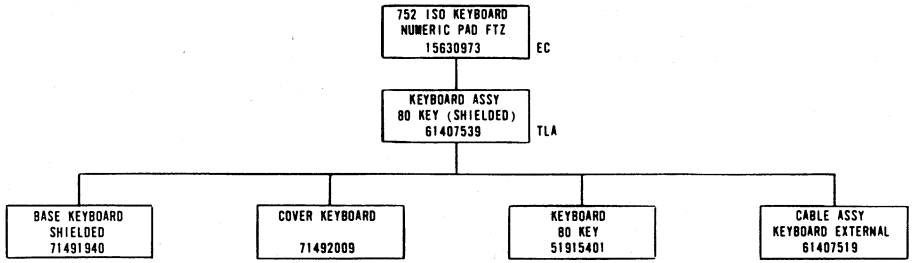

REFERENCE DOCUMENTS

SPARE P/L 66290100
EQUIPMENT MANUAL 62957300
ENGINEERING SPEC 16042790

REFERENCE DRAWING			
COMPONENTS, EXCEPT AS NOTED			
	TOLERANCE	VALUE	RATING
RES			
CAP			

FIRST USED ON	CA150C	
DWN	M. Plantiff	10-21-77
CHKD	[illegible]	10/25/77
ENGR	[illegible]	10/31/77
MFG	[illegible]	10/31/77
APPR	E. N. Noe	1-11-78

TITLE GENEALOGY CHART

CODE IDENT 15920 | C | DRAWING NO 66300758

SCALE | CROSS REF NO | SHEET / OF /

SHEET REVISION STATUS	REVISION RECORD						
	REV	CO	DESCRIPTION	DRFT	DATE	CHKD	APP
	-	50001-23	RELEASED CLASS B	-	1/20/78	-	[illegible]
	A	[illegible]	RELEASED CLASS A	-	[illegible]		[illegible]

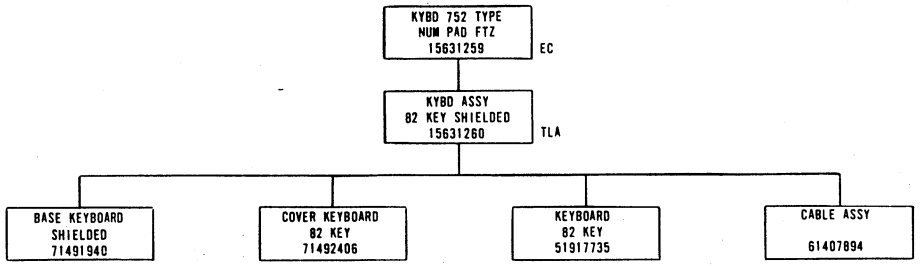

REFERENCE DOCUMENTS

SPARE P L 66300716
EQUIPMENT MANUAL 62957300
ENGINEERING SPEC 16042790

REFERENCE DRAWING			
COMPONENTS, EXCEPT AS NOTED			
	TOLERANCE	VALUE	RATING
RES			
CAP			

INTRO DATA		
FIRST USED ON	CA150C	
DWN	E. GRONO	1/5/78
CHKD	E. Grono	1/5/78
ENGR	[illegible]	1/19/78
MFG	[illegible]	3/12/78
APPR	[illegible]	3/20/78

TITLE
GENEALOGY CHART
82 KEY KYBD FTZ

CODE IDENT 15920 | C | DRAWING NO 66300832

SCALE | CROSS REF NO | SHEET 1 OF 1

62957400 E

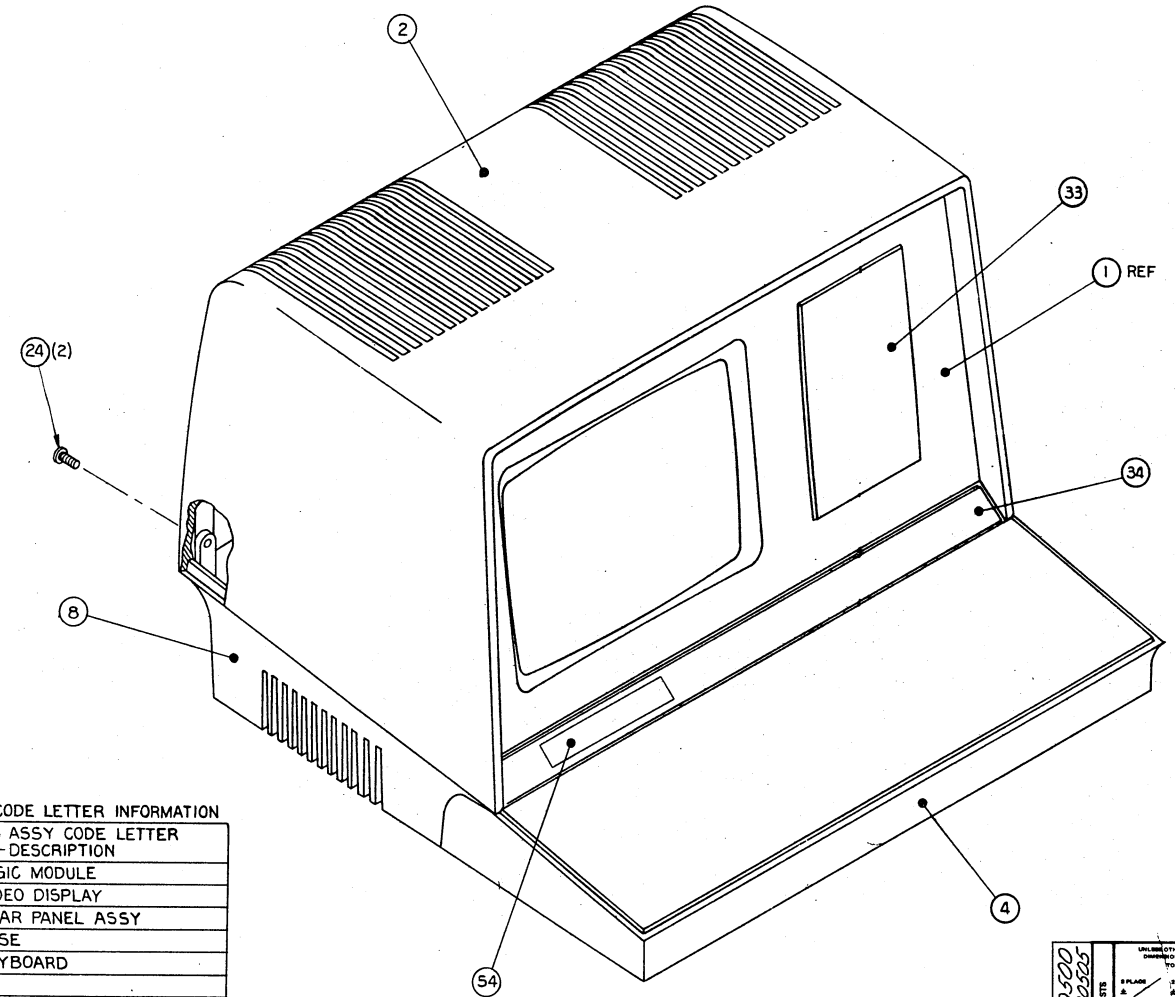

SUB ASSY CODE LETTER INFORMATION

FIND NO	SUB ASSY CODE LETTER DESCRIPTION
39	A - LOGIC MODULE
12	B - VIDEO DISPLAY
11	C - REAR PANEL ASSY
8	D - BASE
4	E - KEYBOARD
13	H - POWER SUPPLY

NOTES:

1. MARK "TOP ASSY 156305XX" IN AREA SHOWN PER CDC SPEC 10121508.
2. CONNECT CRT GND CLIP AS FOLLOWS:
   1. INSERT FLAG PIN IN CONNECTOR "BPI-14".
   2. ATTACH RING LUG TO STUD "E1" ON VIDEO DISPLAY ASSY (F/N 12).
3. IF REQUIRED, INSTALL F/N 48, 49, 50, 51 WITH ADHESIVE F/N 52 PER CDC SPEC P/N 16042739 GEOMETRIC DISTORTION CORRECTION.
4. SEE W/L FIND NO. 59 FOR POWER SUPPLY TRANSFORMER WIRE DESTINATIONS.
5. INSTALL TRANSFORMER WITH PRIMARY POWER CONNECTOR AND GROUND LEAD TOWARD REAR OF CABINET.

SHEET REVISION STATUS

REVISION RECORD

2	1	REV	ECO	DESCRIPTION	DRFT	DATE	CHKD	APP
		A	10653-77	RELEASED CLASS "A"		[illegible]		[illegible]
B	B	B	12008	REVISED PER ECO	[illegible]	2/20/77	[illegible]	[illegible]
B	C	C	CD12684	CHG PART NO ON F/N 54	[illegible]	5/28/77	[illegible]	[illegible]
B	D	D	12331	APL CHANGE ONLY	[illegible]	[illegible]	[illegible]	[illegible]
B	E	E	12332	APL CHANGE ONLY	MD	5/1/77	[illegible]	[illegible]
B	F	F	12629	P/L CHG ONLY	E.E.	12/21/77	[illegible]	[illegible]
G	G	G	12686	REVISED PER ECO	[illegible]	1/21/78	[illegible]	[illegible]
G	H	H	12701	P/L CHG ONLY	[illegible]	3-17-78	[illegible]	[illegible]
J	J	J	12702	REVISED PER ECO	[illegible]	9-4-78	[illegible]	[illegible]
J	K	K	12870	PL CHG ONLY	WJG	8-9-78	[illegible]	[illegible]
J	L	L	13419	PL CHANGE ONLY	[illegible]	5-10-79	[illegible]	[illegible]
J	M	M	13472	PL CHG ONLY	WJG	6-1-79	WJG	[illegible]
J	N	N	13823	F/N 13 WAS [illegible]	[illegible]	11/30/79	WJG	[illegible]

APL 15630500 THRU 15630505

DETACHED LISTS

UNLESS OTHERWISE SPECIFIED DIMENSIONS ARE IN INCHES TOLERANCES

DO NOT SCALE DRAWING

MATERIAL

FINISH

FIRST USED ON	CC555A THRU F	
DWN	D. WELLS	12-4-76
CHKD	[illegible]	12/8/76
ENGR	[illegible]	12/8/76
MFG	[illegible]	12/9/76
APPR	[illegible]	12-16-76

TITLE: 752 DISPLAY TERMINAL

CODE IDENT: 15920 | D | DRAWING NO: 15630500 THRU 15630505

SCALE | EC 15630400 | SHEET 1 OF 2

62957400 E

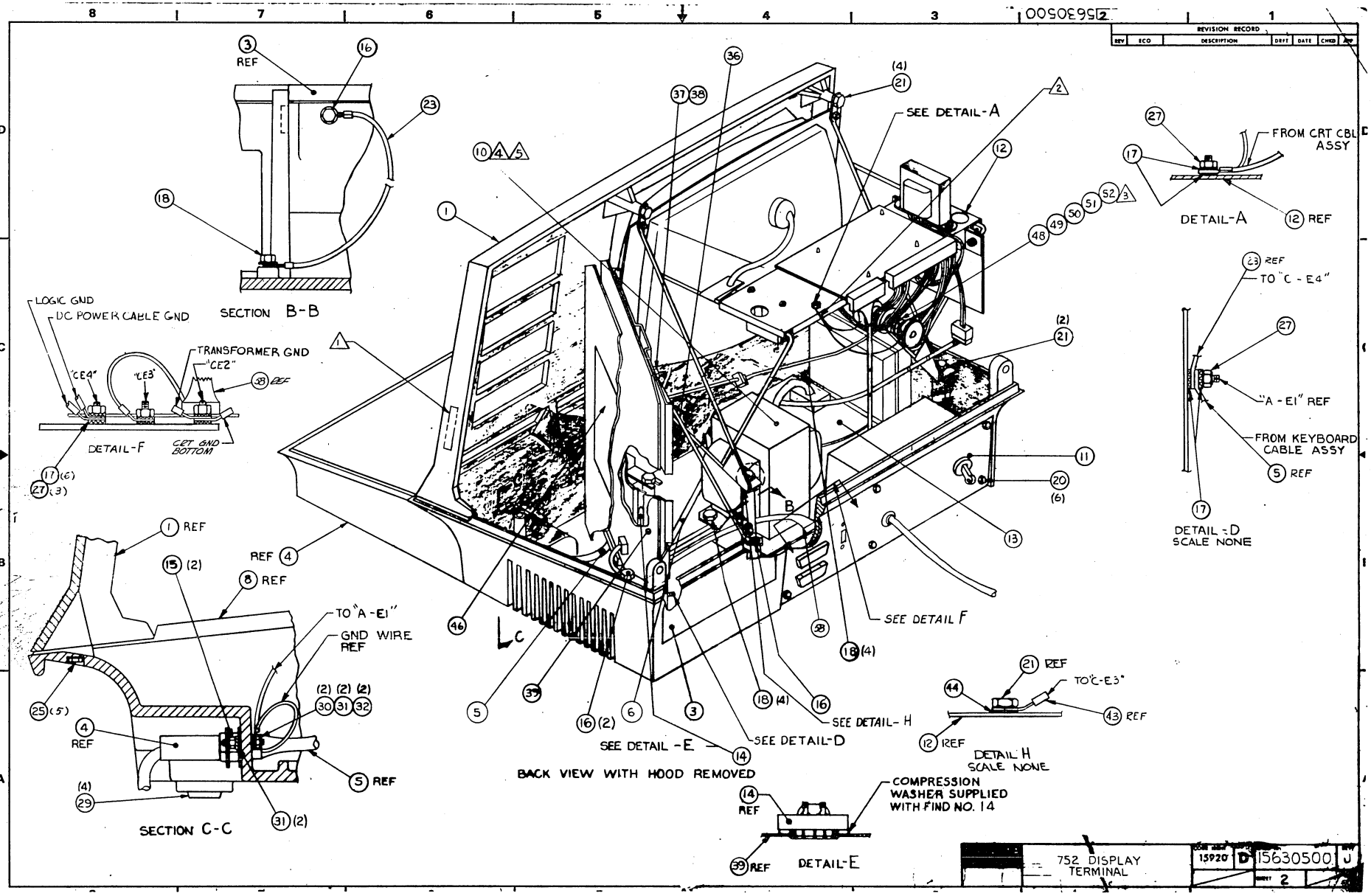

7-21/7-22

BUILD ARC 44[illegible]

ASSEMBLY PARTS LIST

PRINT DATE	PAGE	FILE CHANGE NO.
11-28-79	1	00013823

DIV.	ASSEMBLY NUMBER	CD	REV.	DWG.	DESCRIPTION	MC	STATUS	STATUS DATE	ENG. RESP.	FILE DATE
0860	15630500	5	N	D	TERM MOD I EXP HL 60HZ (TA)	N	REL	12-15-76	CC555A	11-28-79

T	FIND NO	LI	PART NUMBER	CD	M	QUANTITY	U/M	PART DESCRIPTION	MC	YLD	ECO. NO. IN	ECO. NO. OUT	S/N	WK IN	WK OUT
	001	01	7145260[illegible]	1		1	PC	BEZEL 12IN CRT	P						
	002	01	7145280[illegible]	7		1	PC	HOOD, TERMINAL (GOLD FINISH)	P						
	003	01	7145290[illegible]	5		1	PC	PANEL, ACCESS (FINISH=GOLD)	P						
	004	01	6140210[illegible]	4		1	PC	KEYBOARD ASSY (80 KEY)	N						
	005	01	61402300	[illegible]		1	PC	CABLE ASSY KYBD INTERNAL	A						
	006	01	61402400	8		1	PC	CABLE ASSY DC POWER	A						
	008	01	7149193[illegible]	5		1	PC	BASE, TERMINAL (GOLD-FINISH)	P						
	010	01	51915301	9		1	PC	XFMR STEP DOWN 120 220 240V	P		12702			7828	
	011	02	61407798	[illegible]		1	PC	REAR PANEL ASSY 60HZ	A		12332	12870		7743	7905
	011	03	61408216	2		1	PC	REAR PANEL ASSY 60HZ	A		12870			7905	
	012	02	61407969	7		1	PC	VIDEO DISPLAY ASSY	N		12626			7804	
	013	02	90460822	1		1	PC	REPLACED By 90446105 13419	A		12702	13823		7828	7949
	013	03	90446105	[illegible]		1	PC	CD ASSY 9BBD (PWR SPLY MOD)	A		13823			7949	
	014	01	51908902	3		1	PC	ALARM AUDIBLE LUG FIG 2	P						
	015	01	7145580[illegible]	2		2	PC	STANDOFF MALE/FEMALE 4-40 STL	P						
	016	02	51858501	3		4	PC	SCR TPG HEX-WSHR SLT 10X1/2L	B		12702			7828	
	017	02	10126403	4		10	PC	WSHR, NO.10 EXT/T LK STL ZP	B		12008			7711	
	018	03	51917790	1		9	PC	SCREW HEX WSHR HD 8-18X1/2	B		12702			7828	
	020	01	00860303	7		6	PC	MSCR HEX-LK PLN 6-32X3/8 STL	B						
	021	01	00860311	[illegible]		6	PC	MSCR HEX-LK PLN 8-32X3/8 STL	B						
	023	01	61391105	6		2	PC	GND WIRE ASSY (7.5IN 16AWG)	A						
	024	01	10127153	4		2	PC	MSCR PAN PHL 1/4-20X.500 STL	B						

BUILD ARC 44[illegible]

ASSEMBLY PARTS LIST

PRINT DATE	PAGE	FILE CHANGE NO.
11-28-79	2	00013823

DIV.	ASSEMBLY NUMBER	CD	REV.	DWG.	DESCRIPTION	MC	STATUS	STATUS DATE	ENG. RESP.	FILE DATE
0860	15630500	5	N	D	TERM MOD I EXP HL 60HZ (TA)	N	REL	12-15-76	CC555A	11-28-79

T	FIND NO	LI	PART NUMBER	CD	M	QUANTITY	U/M	PART DESCRIPTION	MC	YLD	ECO. NO. IN	ECO. NO. OUT	S/N	WK IN	WK OUT
	025	01	51858503	9		5	PC	SCR TPG HEX-WSHR SLT 10X3/4L	B						
	027	02	10125108	[illegible]		5	PC	NUT, HEX 10-32 MSCR STL ZP	B		12008			7711	
	028	01	66300072	7		REF	PC	GENEALOGY CHART	D						
	029	01	51805801	1		4	PC	BUMPER, RUBBER .300H SLF-STKG	P						
	030	01	10125603	[illegible]		2	PC	WSHR, NO.4 TYP A PLN STL ZP	B						
	031	01	10126400	[illegible]		4	PC	WSHR, NO.4 EXT/T LK STL ZP	B						
	032	01	10125103	1		2	PC	NUT, HEX 4-40 MSCR STL ZP	B						
	033	01	61407552	1		1	PC	FRONT PANEL ASSY MOD 1	A						
	034	01	71491845	5		1	PC	PANEL BLANK, SWITCH ,PLASTIC)	P						
	036	01	71489000	1		1	PC	SUPPORT LOGIC MODULE	P						
	037	01	10125105	6		1	PC	NUT, HEX 6-32 MSCR STL ZP	B						
	038	01	10126401	8		1	PC	WSHR, NO.6 EXT/T LK STL ZP	B						
	039	01	61407657	8		1	PC	LOGIC MODULE ASSY	N						
	043	01	61391104	9		1	PC	GND WIRE ASSY (4.5IN 16AWG)	A						
	044	01	10126402	6		1	PC	WSHR, NO.8 EXT/T LK STL ZP	B						
	046	01	71491949	5		1	PC	LABEL POWER INTERCONN	P						
	048	01	51917[illegible]54	2		1	PC	MAGNET BAR	P						
	049	01	51917[illegible]51	8		1	PC	MAGNET BAR	P						
	050	01	51917[illegible]52	6		1	PC	MAGNET BAR	P						
	051	01	51917[illegible]53	4		1	PC	MAGNET BAR	P						
	052	01	51004[illegible]63	7		10[illegible]	OZ	ADHESIVE, SEALANT SIL RUBBER	B						

BUILD ARC 440

ASSEMBLY PARTS LIST

PRINT DATE	PAGE	FILE CHANGE NO.
11-28-79	3	00013823

DIV.	ASSEMBLY NUMBER	CD	REV.	DWG.	DESCRIPTION	MC	STATUS	STATUS DATE	ENG. RESP.	FILE DATE
0860	15630500	5	N	LI	TERM MOD I EXP HL 60HZ (TA)	N	REL	12-15-76	CC555A	11-28-79

T	FIND NO	LI	PART NUMBER	CD	M	QUANTITY	U/M	PART DESCRIPTION	MC	YLD	ECO. NO. IN	ECO. NO. OUT	S/N	WK IN	WK OUT
	053	01	16042739	9		REF	PC	GEOM DIST CORRECTION	D						
	054	01	15010307	5		1	PC	ID EMBLEM, PRODUCT MEDIUM AL	P						
	055	01	62199500	0		REF	PC	AC/DC PWR INTERCONN DIAG	D						
	056	01	62200824	1		REF	PC	REPLACED BY 62201031 13164	D						
	057	01	62200946	2		REF	PC	INTCONN DIAG SIGNAL	D						
	058	01	61407631	3		1	PC	CABLE ASSY REAR PNL MONITOR	A		12008			7711	
	059	01	61407980	4		REF	PC	HL/POWER SUPPLY	D		12702			7828	
	060	01	16039400	3		REF	PC	POWER SUPPLY SPEC	D		12702			7828	
								*051 TOTAL LINES							

BUILD ARC 440

ASSEMBLY PARTS LIST

PRINT DATE 04-30-79 | PAGE 1 | PRE CHANGE NO. 00013472

DIV.	ASSEMBLY NUMBER	CD	REV.	DWG.	DESCRIPTION	MC	STATUS	STATUS DATE	ENG. RESP.	FILE DATE
0860	15630501	3	M	D	TERM M-1 EXP/FIZ HL 50HZ (TA)	N	REL	12-15-76	CC5558	04-30-79

FIND NO	LI	PART NUMBER	CD	QUANTITY	U/M	PART DESCRIPTION	MC	YLD	ECO. NO. IN	ECO. NO. OUT	S/N	WK IN	WK OUT
001	03	71492176	4	1	PC	BEZEL CRT 12 IN PLASTIC	P		12701			7831	
002	01	71491938	8	1	PC	HOOD, TERMINAL ≥SHIELDED+	P						
003	01	71491939	6	1	PC	PANEL, BASE ≥SHIELDED+	P						
004	01	61407539	8	1	PC	KEYBOARD ASSY 80KEY (SHIELD)	N						
005	01	61402300	0	1	PC	CABLE ASSY KYBD INTERNAL	A						
006	01	61402400	8	1	PC	CABLE ASSY DC POWER	A						
008	01	71491974	3	1	PC	REPLACED BY 71492276 13262	P						
010	01	51915301	9	1	PC	XFMR STEP DOWN 120 220 240V	P		12702			7828	
011	02	61407797	2	1	PC	REAR PANEL ASSY 50HZ	A		12332	12870		7743	7905
011	03	61408215	4	1	PC	REAR PANEL ASSY 50HZ	A		12870			7905	
012	02	61407969	7	1	PC	VIDEO DISPLAY ASSY	N		12626			7804	
013	02	90460822	1	1	PC	REPLACED BY 90446105 13419	A		12702	13419		7828	7926
013	03	90446105	0	1	PC	CD ASSY 98BD (PWR SPLY MOD)	A		13419			7926	
014	01	51908902	3	1	PC	ALARM AUDIBLE LUG FIG 2	P						
015	01	71455001	2	2	PC	STANDOFF MALE/FEMALE 4-40 STL	P						
016	02	51858501	3	4	PC	SCR TPG HEX-WSHR SLT 10X1/2L	B		12702			7828	
017	02	10126403	4	10	PC	WSHR, NO.10 EXT/T LK STL ZP	B		12008			7711	
018	03	51917790	1	9	PC	SCREW HEX WSHR HD 8-18X1/2	B		12702			7828	
020	01	00860303	7	6	PC	MSCR HEX-LK PLN 6-32X3/8 STL	B						
021	01	00860311	0	6	PC	MSCR HEX-LK PLN 8-32X3/8 STL	B						
023	01	61391105	6	2	PC	GND WIRE ASSY 7.5 16GA	A						
024	01	10127153	4	2	PC	MSCR PAN PHL 1/4-20X.500 STL	B						

BUILD ARC 440

ASSEMBLY PARTS LIST

PRINT DATE 04-30-79 | PAGE 2 | PRE CHANGE NO. 00013472

DIV.	ASSEMBLY NUMBER	CD	REV.	DWG.	DESCRIPTION	MC	STATUS	STATUS DATE	ENG. RESP.	FILE DATE
0860	15630501	3	M	D	TERM M-1 EXP/FIZ HL 50HZ (TA)	N	REL	12-15-76	CC5558	04-30-79

FIND NO	LI	PART NUMBER	CD	QUANTITY	U/M	PART DESCRIPTION	MC	YLD	ECO. NO. IN	ECO. NO. OUT	S/N	WK IN	WK OUT
025	01	51858503	9	5	PC	SCR TPG HEX-WSHR SLT 10X3/4L	B						
027	02	10125108	0	5	PC	NUT, HEX 10-32 MSCR STL ZP	B		12008			7711	
028	01	66300072	7	REF	PC	GENEALOGY CHART	D						
029	01	51805801	1	4	PC	BUMPER, RUBBER .300H SLF-STKG	P						
030	01	10125603	0	2	PC	WSHR, NO.4 TYP A PLN STL ZP	B						
031	01	10126400	0	4	PC	WSHR, NO.4 EXT/T LK STL ZP	B						
032	01	10125103	1	2	PC	NUT, HEX 4-40 MSCR STL ZP	B						
033	01	61407552	1	1	PC	FRONT PANEL ASSY MOD 1	A						
034	01	71491845	5	1	PC	PANEL BLANK, SWITCH ,PLASTIC)	P						
036	01	71489000	1	1	PC	SUPPORT LOGIC MODULE	P						
037	01	10125105	6	1	PC	NUT, HEX 6-32 MSCR STL ZP	B						
038	01	10126401	8	1	PC	WSHR, NO.6 EXT/T LK STL ZP	B						
039	01	61407657	8	1	PC	LOGIC MODULE ASSY	N						
043	01	61391104	9	1	PC	GND WIRE ASSY 4.5 16GA	A						
044	01	10126402	6	1	PC	WSHR, NO.8 EXT/T LK STL ZP	B						
046	01	71491949	5	1	PC	LABEL POWER INTERCONN	P						
048	01	51917054	2	1	PC	MAGNET BAR	P						
049	01	51917051	8	1	PC	MAGNET BAR	P						
050	01	51917052	6	1	PC	MAGNET BAR	P						
051	01	51917053	4	1	PC	MAGNET BAR	P						
052	01	51004063	7	100	OZ	ADHESIVE, SEALANT SIL RUBBER	B						

BUILD ARC 440

ASSEMBLY PARTS LIST

PRINT DATE 04-30-79 | PAGE 3 | PRE CHANGE NO. 00013472

DIV.	ASSEMBLY NUMBER	CD	REV.	DWG.	DESCRIPTION	INC	STATUS	STATUS DATE	ENG. RESP.	PRT DATE
0860	15630501	3	M	D	TERM M-I EXP/FIZ HL 50HZ (IA)	N	REL	12-15-76	CC5558	04-30-79

FIND NO.	LI	PART NUMBER	CD	M	QUANTITY	U/M	PART DESCRIPTION	INC	YLD	ECO. NO. IN	ECO. NO. OUT	S/N	WK IN	WK OUT
053	01	16042739	9		REF	PC	GEOM DIST CORRECTION	D						
054	02	15010307	5		1	PC	ID EMBLEM, PRODUCT MEDIUM AL	P		12084			7723	
055	01	62199500	0		REF	PC	AC/DC PWR INTERCONN DIAG	D						
056	01	62200824	1		REF	PC	REPLACED BY 62201031 13164	D						
057	01	62200946	2		REF	PC	INTCONN DIAG SIGNAL	D						
058	01	61407631	3		1	PC	CABLE ASSY REAR PNL MONITOR	A		12008			7711	
059	01	61407980	4		REF	PC	WL/POWER SUPPLY	D		12102			7828	
060	01	16039400	3		REF	PC	POWER SUPPLY SPEC	D		12102			7828	
							0051 TOTAL LINES							

BUILD ARC 440

ASSEMBLY PARTS LIST

PRINT DATE 04-30-79 | PAGE 1 | PRE CHANGE NO. 00013472

DIV.	ASSEMBLY NUMBER	CD	REV.	DWG.	DESCRIPTION	MC	STATUS	STATUS DATE	ENG. RESP.	PRE DATE
0860	15630502	1	M	D	TERM MOD I EXP C/H 60HZ (TA)	N	REL	12-15-76	CC555C	04-30-79

FIND NO	LI	PART NUMBER	CD	M	QUANTITY	U/M	PART DESCRIPTION	MC	YLD	ECO. NO. IN	ECO. NO. OUT	S/N	WK IN	WK OUT
001	01	71452600	1		1	PC	BEZEL 12IN CRT	P						
002	01	71452800	7		1	PC	HOOD, TERMINAL (GOLD FINISH)	P						
003	01	71452900	5		1	PC	PANEL, ACCESS (FINISH-GOLD)	P						
004	01	61402100	4		1	PC	KEYBOARD ASSY (80 KEY)	N						
005	01	61402300	0		1	PC	CABLE ASSY KYBD INTERNAL	A						
006	01	61402400	8		1	PC	CABLE ASSY DC POWER	A						
008	01	71491930	5		1	PC	BASE, TERMINAL (GOLD-FINISH)	P						
010	01	51915301	9		1	PC	XFMR STEP DOWN 120 220 240V	P		12702			7828	
011	02	61407798	0		1	PC	REAR PANEL ASSY 60HZ	A		12331	12870		7743	7905
011	03	61408216	2		1	PC	REAR PANEL ASSY 60HZ	A		12870			7905	
012	02	61407969	7		1	PC	VIDEO DISPLAY ASSY	N		12626			7804	
013	02	90460822	1		1	PC	REPLACED BY 90446105 13419	A		12702	13472		7828	7926
013	03	90446105	0		1	PC	CD ASSY 9BBD (PWR SPLY MOD)	A		13472			7926	
014	01	51908902	3		1	PC	ALARM AUDIBLE LUG FIG 2	P						
015	01	71455801	2		2	PC	STANDOFF MALE/FEMALE 4-40 STL	P						
016	02	51858501	3		4	PC	SCR TPG HEX-WSHR SLT 10X1/2L	B		12702			7828	
017	02	10126403	4		10	PC	WSHR, NO.10 EXT/T LK STL ZP	B		12008			7711	
018	03	51917790	1		9	PC	SCREW HEX WSHR HD 8-18X1/2	B		12702			7828	
020	01	00860303	7		6	PC	MSCR HEX-LK PLN 6-32X3/8 STL	B						
021	01	00860311	0		6	PC	MSCR HEX-LK PLN 8-32X3/8 STL	B						
023	01	61391105	6		2	PC	GND WIRE ASSY 7.5 16GA	A						
024	01	10127153	4		2	PC	MSCR PAN PHL 1/4-20X.500 STL	B						

BUILD ARC 440

ASSEMBLY PARTS LIST

PRINT DATE 04-30-79 | PAGE 2 | PRE CHANGE NO. 00013472

DIV.	ASSEMBLY NUMBER	CD	REV.	DWG.	DESCRIPTION	MC	STATUS	STATUS DATE	ENG. RESP.	PRE DATE
0860	15630502	1	M	D	TERM MOD I EXP C/H 60HZ (TA)	N	REL	12-15-76	CC555C	04-30-79

FIND NO	LI	PART NUMBER	CD	M	QUANTITY	U/M	PART DESCRIPTION	MC	YLD	ECO. NO. IN	ECO. NO. OUT	S/N	WK IN	WK OUT
025	01	51858503	9		5	PC	SCR TPG HEX-WSHR SLT 10X3/4L	B						
027	02	10125108	0		5	PC	NUT, HEX 10-32 MSCR STL ZP	B		12008			7711	
028	01	66300072	7		REF	PC	GENEALOGY CHART	D						
029	01	51805801	1		4	PC	BUMPER, RUBBER .300H SLF-STKG	P						
030	01	10125603	0		2	PC	WSHR, NO.4 TYP A PLN STL ZP	B						
031	01	10126400	0		4	PC	WSHR, NO.4 EXT/T LK STL ZP	B						
032	01	10126103	1		2	PC	NUT, HEX 4-40 MSCR STL ZP	B						
033	01	61407592	1		1	PC	FRONT PANEL ASSY MOD I	A						
034	01	71491845	5		1	PC	PANEL BLANK, SWITCH ,PLASTIC)	P						
036	01	71489000	1		1	PC	SUPPORT LOGIC MODULE	P						
037	01	10125105	6		1	PC	NUT, HEX 6-32 MSCR STL ZP	B						
038	01	10126401	8		1	PC	WSHR, NO.6 EXT/T LK STL ZP	B						
039	01	61407656	0		1	PC	LOGIC MODULE ASSY	N						
043	01	61391104	9		1	PC	GND WIRE ASSY 4.5 16GA	A						
044	01	10126402	6		1	PC	WSHR, NO.8 EXT/T LK STL ZP	B						
046	01	71491949	5		1	PC	LABEL POWER INTERCONN	P						
048	01	51917054	2		1	PC	MAGNET BAR	P						
049	01	51917051	8		1	PC	MAGNET BAR	P						
050	01	51917052	6		1	PC	MAGNET BAR	P						
051	01	51917053	4		1	PC	MAGNET BAR	P						
052	01	51004063	7		100	OZ	ADHESIVE, SEALANT SIL RUBBER	B						

BUILD ARC 440

ASSEMBLY PARTS LIST

PRINT DATE 04-30-79 | PAGE 3 | PRE CHANGE NO. 00013472

DIV.	ASSEMBLY NUMBER	CD	REV.	DWG.	DESCRIPTION	MC	STATUS	STATUS DATE	ENG. RESP.	PRE DATE
0860	15630502	1	H	D	TERM MOD I EXP C/H 60HZ (TA)	N	REL	12-15-76	CC555C	04-30-79

FIND NO.	LI	PART NUMBER	CD	QUANTITY	U/M	PART DESCRIPTION	MC	YLD	ECO. NO. IN	ECO. NO. OUT	E/M	WK IN	WK OUT
053	01	16042739	9	REF	PC	GEOM DIST CORRECTION	D						
054	01	15010307	5	1	PC	ID EMBLEM, PRODUCT MEDIUM AL	P						
055	01	62199500	0	REF	PC	AC/DC PWR INTERCONN DIAG	D						
056	01	62200824	1	REF	PC	REPLACED BY 62201031 13164	D						
057	01	62200946	2	REF	PC	INTCONN DIAG SIGNAL	D						
058	01	61407631	3	1	PC	CABLE ASSY REAR PNL MONITOR	A		12008			7711	
059	01	61407980	4	REF	PC	WL/POWER SUPPLY	D		12702			7828	
060	01	16039400	3	REF	PC	POWER SUPPLY SPEC	D		12702			7828	
						0051 TOTAL LINES							

BUILD ARC 440

ASSEMBLY PARTS LIST

PRINT DATE 04-30-79 | PAGE 1 | PRE CHANGE NO. 00013472

DIV.	ASSEMBLY NUMBER	CD	REV.	DWG.	DESCRIPTION	MC	STATUS	STATUS DATE	ENG. RESP.	PRE DATE
0860	15630503	9	M	D	TERM M-I EXP/FTZ C/H 50HZ(TA)	N	REL	12-15-76	CC5550	04-30-79

FIND NO	SI	PART NUMBER	CD	QUANTITY	U/M	PART DESCRIPTION	MC	YLD	ECO. NO. IN	ECO. NO. OUT	S/N	WK IN	WK OUT
001	03	71492176	4	1	PC	BEZEL CRT 12 IN PLASTIC	P		12701			7831	
002	01	71491938	8	1	PC	HOOD, TERMINAL ≥SHIELDED<	P						
003	01	71491939	6	1	PC	PANEL, BASE ≥SHIELDED<	P						
004	01	61407539	0	1	PC	KEYBOARD ASSY 80KEY (SHIELD)	N						
005	01	61402300	0	1	PC	CABLE ASSY KYBD INTERNAL	A						
006	01	61402400	8	1	PC	CABLE ASSY DC POWER	A						
008	01	71491974	3	1	PC	REPLACED BY 71492276 13262	P						
010	01	51915301	9	1	PC	XFMR STEP DOWN 120 220 240V	P		12702			7828	
011	02	61407797	2	1	PC	REAR PANEL ASSY 50HZ	A		12231	12870		7743	7905
011	03	61408215	4	1	PC	REAR PANEL ASSY 50HZ	A		12870			7905	
012	02	61407969	7	1	PC	VIDEO DISPLAY ASSY	N		12626			7804	
013	02	90460822	1	1	PC	REPLACED BY 90446105 13419	A		12702	13419		7828	7926
013	03	90446105	0	1	PC	CD ASSY 98RD (PWR SPLY MOD)	A		13419			7926	
014	01	51908902	3	1	PC	ALARM AUDIBLE LUG FIG 2	P						
015	01	71455601	2	2	PC	STANDOFF MALE/FEMALE 4-40 STL	P						
016	02	51858501	3	4	PC	SCR TPG HEX-WSHR SLT 10X1/2L	B		12702			7828	
017	02	10126403	4	10	PC	WSHR, NO.10 EXT/T LK STL ZP	B		12008			7711	
018	03	51917790	1	9	PC	SCREW HEX WSHR HD 8-18X1/2	B		12702			7828	
020	01	00860303	7	6	PC	MSCR HEX-LK PLN 6-32X3/8 STL	B						
021	01	00860311	0	6	PC	MSCR HEX-LK PLN 8-32X3/8 STL	B						
023	01	61391105	6	2	PC	GND WIRE ASSY 7.5 16GA	A						
024	01	10127153	4	2	PC	MSCR PAN PHL 1/4-20X.500 STL	B						

BUILD ARC 440

ASSEMBLY PARTS LIST

PRINT DATE 04-30-79 | PAGE 2 | PRE CHANGE NO. 00013472

DIV.	ASSEMBLY NUMBER	CD	REV.	DWG.	DESCRIPTION	MC	STATUS	STATUS DATE	ENG. RESP.	PRE DATE
0860	15630503	9	M	D	TERM M-I EXP/FTZ C/H 50HZ(TA)	N	REL	12-15-76	CC5550	04-30-79

FIND NO	SI	PART NUMBER	CD	QUANTITY	U/M	PART DESCRIPTION	MC	YLD	ECO. NO. IN	ECO. NO. OUT	S/N	WK IN	WK OUT
025	01	51858503	9	5	PC	SCR TPG HEX-WSHR SLT 10X3/4L	B						
027	02	10125108	0	5	PC	NUT, HEX 10-32 MSCR STL ZP	B		12008			7711	
028	01	66300072	7	REF	PC	GENEALOGY CHART	D						
029	01	51805801	1	4	PC	BUMPER, RUBBER .300H SLF-STKG	P						
030	01	10125603	0	2	PC	WSHR, NO.4 TYP A PLN STL ZP	B						
031	01	10126400	0	4	PC	WSHR, NO.4 EXT/T LK STL ZP	B						
032	01	10125103	1	2	PC	NUT, HEX 4-40 MSCR STL ZP	B						
033	01	61407552	1	1	PC	FRONT PANEL ASSY MOD I	A						
034	01	71491845	5	1	PC	PANEL BLANK, SWITCH ,PLASTIC)	P						
036	01	71469000	1	1	PC	SUPPORT LOGIC MODULE	P						
037	01	10125105	6	1	PC	NUT, HEX 6-32 MSCR STL ZP	B						
038	01	10126401	8	1	PC	WSHR, NO.6 EXT/T LK STL ZP	B						
039	01	61407656	0	1	PC	LOGIC MODULE ASSY	N						
043	01	61391104	9	1	PC	GND WIRE ASSY 4.5 16GA	A						
044	01	10126402	6	1	PC	WSHR, NO.8 EXT/T LK STL ZP	B						
046	01	71491949	5	1	PC	LABEL POWER INTERCONN	P						
048	01	51917054	2	1	PC	MAGNET BAR	P						
049	01	51917051	8	1	PC	MAGNET BAR	P						
050	01	51917052	6	1	PC	MAGNET BAR	P						
051	01	51917053	4	1	PC	MAGNET BAR	P						
052	01	51004063	7	100	OZ	ADHESIVE, SEALANT SIL RUBBER	B						

BUILD ARC 440

ASSEMBLY PARTS LIST

PRINT DATE 04-30-79 | PAGE 3 | PRE CHANGE NO. 00013472

DIV.	ASSEMBLY NUMBER	CD	REV.	DWG.	DESCRIPTION	INC	STATUS	STATUS DATE	ENG. RESP.	PRE DATE
0860	15630503	9	M	D	TERM M-I EXP/FTZ C/H 50HZ(TA)	N	REL	12-15-76	CC555D	04-30-79

FIND NO.	LI	PART NUMBER	CD	M	QUANTITY	U/M	PART DESCRIPTION	INC	YLD	ECO. NO. IN	ECO. NO. OUT	S/N	WK IN	WK OUT
053	01	16042739	9		REF	PC	GEOM DIST CORRECTION	D						
054	01	15010307	5		REF	PC	ID EMBLEM, PRODUCT MEDIUM AL	P						
055	01	62199500	0		REF	PC	AC/DC PWR INTERCONN DIAG	D						
056	01	62200824	1		REF	PC	REPLACED BY 62201031 13164	D						
057	01	62200946	2		REF	PC	INTCONN DIAG SIGNAL	D						
058	01	61407631	3		1	PC	CABLE ASSY REAR PNL MONITOR	A		12008			7711	
059	01	61407980	4		REF	PC	WL/POWER SUPPLY	D		12702			7828	
060	01	16039400	3		REF	PC	POWER SUPPLY SPEC	D		12702			7828	
							0051 TOTAL LINES							

BUILD ARC 440

ASSEMBLY PARTS LIST

PRINT DATE 04-30-79 | PAGE 1 | PRE CHANGE NO. 00013472.

DIV.	ASSEMBLY NUMBER	CD	REV.	DWG.	DESCRIPTION	INC	STATUS	STATUS DATE	ENG. RESP.	PRE DATE
0860	15630504	7	M	D	TERM MOD I EXP HL 50HZ (TA)	N	REL	12-15-76	CC555E	04-30-79

FIND NO	LI	PART NUMBER	CD	M	QUANTITY	U/M	PART DESCRIPTION	INC	YLD	ECO. NO. IN	ECO. NO. OUT	S/N	WK IN	WK OUT
001	01	71452600	1		1	PC	BEZEL 12IN CRT	P						
002	01	71482800	7		1	PC	HOOD, TERMINAL (GOLD FINISH)	P						
003	01	71452900	5		1	PC	PANEL, ACCESS (FINISH-GOLD)	P						
004	01	61402100	4		1	PC	KEYBOARD ASSY (80 KEY)	N						
005	01	61402300	0		1	PC	CABLE ASSY KYBD INTERNAL	A						
006	01	61402400	8		1	PC	CABLE ASSY DC POWER	A						
008	01	71491930	5		1	PC	BASE, TERMINAL (GOLD-FINISH)	P						
010	01	51915301	9		1	PC	XFMR STEP DOWN 120 220 240V	P						
011	01	61407797	2		1	PC	REAR PANEL ASSY 50HZ	A			12870			7905
011	02	61408215	4		1	PC	REAR PANEL ASSY 50HZ	A		12870			7905	
012	01	61407969	7		1	PC	VIDEO DISPLAY ASSY	N						
013	01	90460822	1		1	PC	REPLACED BY 90446105 13419	A			13472			7926
013	02	90446105	0		1	PC	CD ASSY 9BBD (PWR SPLY MOD)	A		13472			7926	
014	01	51908902	3		1	PC	ALARM AUDIBLE LUG FIG 2	P						
015	01	71455801	2		2	PC	STANDOFF MALE/FEMALE 4-40 STL	P						
016	01	51858501	3		4	PC	SCR TPG HEX-WSHR SLT 10X1/2L	B						
017	01	10126403	4		10	PC	WSHR, NO.10 EXT/T LK STL ZP	B						
018	01	51917790	1		9	PC	SCREW HEX WSHR HD 8-18X1/2	B						
020	01	00860303	7		6	PC	MSCR HEX-LK PLN 6-32X3/8 STL	B						
021	01	00860311	0		6	PC	MSCR HEX-LK PLN 8-32X3/8 STL	B						
023	01	61391105	6		2	PC	GND WIRE ASSY 7.5 16GA	A						
024	01	10127153	4		2	PC	MSCR PAN PHL 1/4-20X.500 STL	B						

BUILD ARC 440

ASSEMBLY PARTS LIST

PRINT DATE 04-30-79 | PAGE 2 | PRE CHANGE NO. 00013472

DIV.	ASSEMBLY NUMBER	CD	REV.	DWG.	DESCRIPTION	INC	STATUS	STATUS DATE	ENG. RESP.	PRE DATE
0860	15630504	7	M	D	TERM MOD I EXP HL 50HZ (TA)	N	REL	12-15-76	CC555E	04-30-79

FIND NO	LI	PART NUMBER	CD	M	QUANTITY	U/M	PART DESCRIPTION	INC	YLD	ECO. NO. IN	ECO. NO. OUT	S/N	WK IN	WK OUT
025	01	51858503	9		5	PC	SCR TPG HEX-WSHR SLT 10X3/4L	B						
027	02	10125108	0		5	PC	NUT, HEX 10-32 MSCR STL ZP	B						
028	01	66300072	7		REF	PC	GENEALOGY CHART	D						
029	01	51805801	1		4	PC	BUMPER, RUBBER .300H SLF-STKG	P						
030	01	10125603	0		2	PC	WSHR, NO.4 TYP A PLN STL ZP	B						
031	01	10126400	0		4	PC	WSHR, NO.4 EXT/T LK STL ZP	B						
032	01	10125103	1		2	PC	NUT, HEX 4-40 MSCR STL ZP	B						
033	01	61407552	1		1	PC	FRONT PANEL ASSY MOD 1	A						
034	01	71491848	8		1	PC	PANEL BLANK, SWITCH ,PLASTIC)	P						
036	01	71489000	1		1	PC	SUPPORT LOGIC MODULE	P						
037	01	10125105	6		1	PC	NUT, HEX 6-32 MSCR STL ZP	B						
038	01	10126401	8		1	PC	WSHR, NO.6 EXT/T LK STL ZP.	B						
039	01	61407657	8		1	PC	LOGIC MODULE ASSY	N						
043	01	61391104	9		1	PC	GND WIRE ASSY 4.5 16GA	A						
044	01	10126402	6		1	PC	WSHR, NO.8 EXT/T LK STL ZP	B						
046	01	71491949	5		1	PC	LABEL POWER INTERCONN	P						
048	01	51917054	2		1	PC	MAGNET BAR	P						
049	01	51917051	8		1	PC	MAGNET BAR	P						
050	01	51917052	6		1	PC	MAGNET BAR	P						
051	01	51917053	4		1	PC	MAGNET BAR	P						
052	01	51004063	7		100	OZ	ADHESIVE, SEALANT SIL RUBBER	B						

BUILD ARC 440

ASSEMBLY PARTS LIST

PRINT DATE 04-30-79 | PAGE 3 | PRE CHANGE NO. 00013472

DIV.	ASSEMBLY NUMBER	CD	REV.	DWG.	DESCRIPTION	MC	STATUS	STATUS DATE	ENG. RESP.	PRE DATE
0860	15630504	7	M	D	TERM MOD 1 EXP HL 50HZ (TA)	N	REL	12-15-76	CC555E	04-30-79

FIND NO	LI	PART NUMBER	CD	QUANTITY	U/M	PART DESCRIPTION	MC	YLD	ECO. NO. IN	ECO. NO. OUT	S/N	WK IN	WK OUT
053	01	16042739	9	REF	PC	GEOM DIST CORRECTION	D						
054	01	15010307	5	1	PC	ID EMBLEM, PRODUCT MEDIUM AL	P						
055	01	62199500	0	REF	PC	AC/DC PWR INTERCONN DIAG	D						
056	01	62200824	1	REF	PC	REPLACED BY 62201031 13164	D						
057	01	62200946	2	REF	PC	INTCONN DIAG SIGNAL	D						
058	01	61407631	3	1	PC	CABLE ASSY REAR PNL MONITOR	A						
059	01	61407980	4	REF	PC	WL/POWER SUPPLY	D						
060	01	16039400	3	REF	PC	POWER SUPPLY SPEC	D						
						0051 TOTAL LINES							

BUILD AHC 440

ASSEMBLY PARTS LIST

PRINT DATE 04-30-79 | PAGE 1 | FSE CHANGE NO 13472

DIV 0860 | ASSEMBLY NUMBER 156J054 | CD 4 | REV M | DWG D | DESCRIPTION TERM MOD I EXP C/H 50HZ (TA) | MK N | STATUS REL | STATUS DATE 12-15-76 | ENG RESP CC555F | FSE DATE 04-19-79

FIND NO	SI	PART NUMBER	CD	MK	QUANTITY	U/M	PART DESCRIPTION	MK	YLD	ECO NO IN	ECO NO OUT	S/N	WE IN	WE OUT
001	01	71452600	1		1	PC	BEZEL 12IN CRT	P						
002	01	71452800	7		1	PC	HOOD, TERMINAL (GOLD FINISH)	P						
003	01	71452900	5		1	PC	PANEL, ACCESS (FINISH-GOLD)	P						
004	01	61402100	4		1	PC	KEYBOARD ASSY (80 KEY)	N						
005	01	61402300	0		1	PC	CABLE ASSY KYBD INTERNAL	A						
006	01	61402400	8		1	PC	CABLE ASSY DC POWER	A						
008	01	71491930	5		1	PC	BASE, TERMINAL (GOLD-FINISH)	P						
010	01	51915301	9		1	PC	XFMR STEP DOWN 120 220 240V	P						
011	01	61407797	2		1	PC	REAR PANEL ASSY 50HZ	A			12870			7905
011	02	61408215	4		1	PC	REAR PANEL ASSY 50HZ	A		12870			7905	
012	01	61407969	7		1	PC	VIDEO DISPLAY ASSY	N						
013	01	90460822	1		1	PC	PC CARD ASSY TOKD	A						
	02	90446103	0		1		CD ASSY 9600 (PWR SPLY MOD)							
014	01	51904902	3		1	PC	ALARM AUDIBLE LUG FIG 2	P						
015	01	71455801	2		2	PC	STANDOFF HALE/FEMALE 4-40 STL	P						
016	01	51858501	3		4	PC	SCR TPG HEX-WSHR SLT 10X1/2L	B						
017	01	10126403	4		10	PC	WSHR, NO.10 EXT/T LK STL ZP	B						
018	01	51917790	1		9	PC	SCREW HEX WSHR HD 8-18X1/2	B						
020	01	00860303	7		6	PC	MSCR HEX-LK PLN 6-32X3/8 STL	B						
021	01	00860311	0		6	PC	MSCR HEX-LK PLN 8-32X3/8 STL	B						
023	01	61391105	6		2	PC	GND WIRE ASSY 7.5 16GA	A						
024	01	10127153	4		2	PC	MSCR PAN PHL 1/4-20X.500 STL	B						

BUILD AHC 440

ASSEMBLY PARTS LIST

PRINT DATE 04-30-79 | PAGE 2 | FSE CHANGE NO 13472

DIV 0860 | ASSEMBLY NUMBER 156J054 | CD 4 | REV M | DWG D | DESCRIPTION TERM MOD I EXP C/H 50HZ (TA) | MK N | STATUS REL | STATUS DATE 12-15-76 | ENG RESP CC555F | FSE DATE 04-19-79

FIND NO	SI	PART NUMBER	CD	MK	QUANTITY	U/M	PART DESCRIPTION	MK	YLD	ECO NO IN	ECO NO OUT	S/N	WE IN	WE OUT
025	01	51858503	9		5	PC	SCR TPG HEX-WSHR SLT 10X3/4L	B						
027	02	10125108	0		5	PC	NUT, HEX 10-32 MSCR STL ZP	B						
028	01	66300072	7		REF	PC	GENEALOGY CHART	D						
029	01	51805801	1		4	PC	BUMPER, RUBBER .300H SLF-STKO	P						
030	01	10125603	0		2	PC	WSHR, NO.4 TYP A PLN STL ZP	B						
031	01	10126400	0		4	PC	WSHR, NO.4 EXT/T LK STL ZP	B						
032	01	10125103	1		2	PC	NUT, HEX 4-40 MSCR STL ZP	B						
033	01	61407552	1		1	PC	FRONT PANEL ASSY MOD 1	A						
034	01	71491845	5		1	PC	PANEL BLANK, SWITCH ,PLASTIC)	P						
036	01	71489000	1		1	PC	SUPPORT LOGIC MODULE	P						
037	01	10125105	6		1	PC	NUT, HEX 6-32 MSCR STL ZP	B						
038	01	10126401	8		1	PC	WSHR, NO.6 EXT/T LK STL ZP	B						
039	01	61407656	0		1	PC	LOGIC MODULE ASSY	N						
043	01	61391104	9		1	PC	GND WIRE ASSY 4.5 16GA	A						
044	01	10126402	6		1	PC	WSHR, NO.8 EXT/T LK STL ZP	B						
046	01	71491949	5		1	PC	LABEL POWER INTERCONN	P						
048	01	51917054	2		1	PC	MAGNET BAR	P						
049	01	51917051	8		1	PC	MAGNET BAR	P						
050	01	51917052	6		1	PC	MAGNET BAR	P						
051	01	51917053	4		1	PC	MAGNET BAR	P						
052	01	51004063	7		100	OZ	ADHESIVE, SEALANT SIL RUBBER	B						

BUILD ARC 440

ASSEMBLY PARTS LIST

PRINT DATE	PAGE	FILE CHANGE NO
[illegible]	1	13472

DIV	ASSEMBLY NUMBER	LO	REV	DWG	DESCRIPTION	MK	STATUS	STATUS DATE	ENG RESP	FILE DATE
0000	15030505	4	M	D	TERM MOD 1 EXP C/H 50HZ (TA)	N	REL	12-15-76	CC555F	04-19-79

FIND NO	SI	PART NUMBER	LO	QUANTITY	U/M	PART DESCRIPTION	MK	YEN	SLO NO IN	SLO NO OUT	E N	WK IN	WK OUT
083	01	16042719	9	REF	PC	GEOM DIST CORRECTION	D						
084	01	15010307	5	1	PC	ID EMBLEM, PRODUCT MEDIUM AL	P						
085	01	62199500	0	REF	PC	AC/DC PWR INTERCONN DIAG	D						
086	01	62200824	1	REF	PC	REPLACED BY 62201031 13164	D						
087	01	62200946	2	REF	PC	INTCONN DIAG SIGNAL	D						
088	01	61407031	3	1	PC	CABLE ASSY REAR PNL MONITOR	A						
089	01	61407980	4	REF	PC	WL/POWER SUPPLY	D						
090	01	16039400	3	REF	PC	POWER SUPPLY SPEC	D						
						0050 TOTAL LINES							

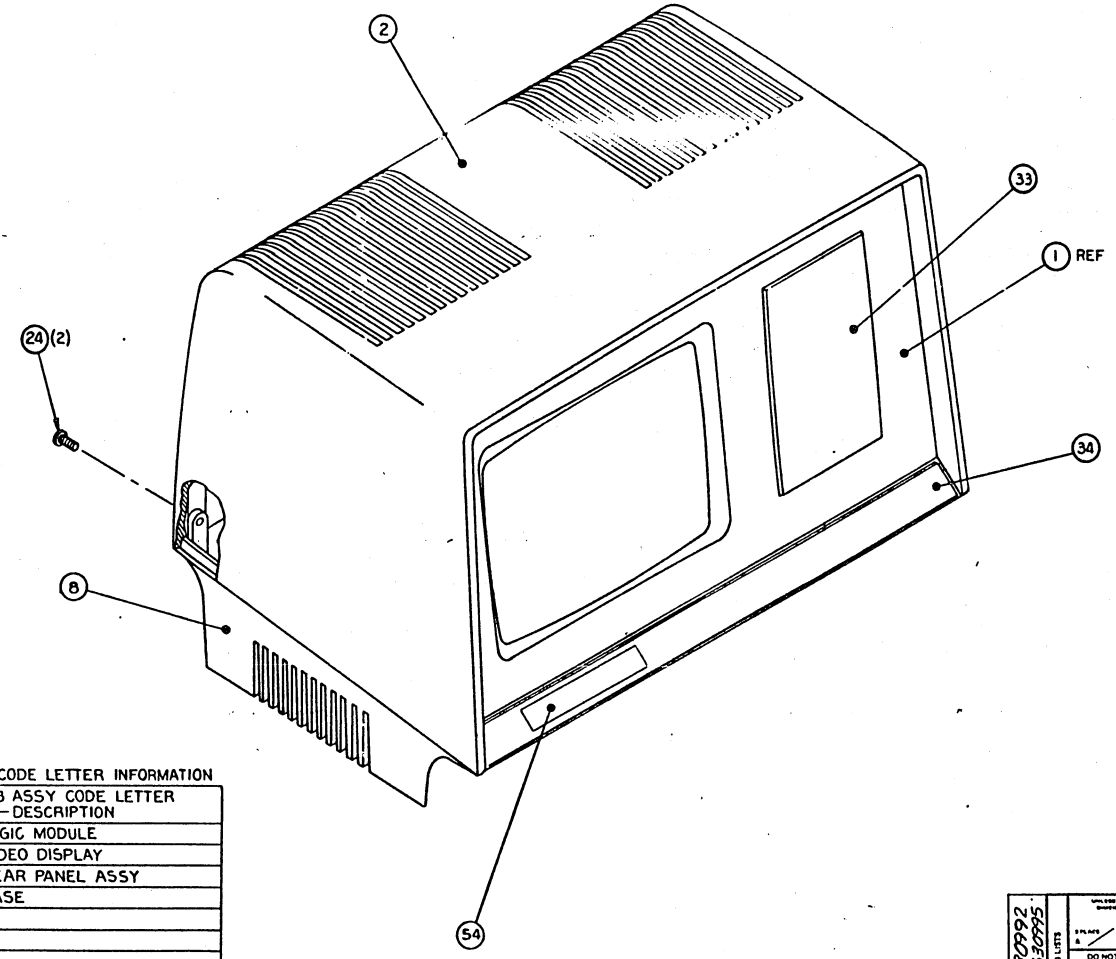

SHEET REVISION STATUS			REVISION RECORD					
2	1	REV	ECO	DESCRIPTION	DRFT	DATE	CHKD	APP
-	-	-	[illegible]-92	RELEASED CLASS "B"	/	[illegible]		[illegible]
01	01	01	50212	RELEASE ITEM 3	[illegible]	1-13-78	[illegible]	[illegible]
A	A	A	12490-14	RELEASED CLASS A	/	1-17-78	/	[illegible]
B	B	B	12702	REVISED PER ECO	[illegible]	[illegible]	[illegible]	[illegible]
B	C	C	12870	PL CHG ONLY	WJG	8-9-78	[illegible]	[illegible]
B	D	D	13419	PL CHANGE ONLY	[illegible]	5-0-79	[illegible]	[illegible]
B	E	E	13472	PL CHG ONLY	WJG	6-1-79	[illegible]	[illegible]

NOTES:

1. MARK "TOP ASSY 156309XX" IN AREA SHOWN PER CDC SPEC 10121508.
2. CONNECT CRT GND CLIP AS FOLLOWS:
   1. INSERT FLAG PIN IN CONNECTOR "BP1-14".
   2. ATTACH RING LUG TO STUD "E1" ON VIDEO DISPLAY ASSY (F/N 12).
3. IF REQUIRED, INSTALL F/N 48, 49, 50, 51 WITH ADHESIVE F/N 52 PER CDC SPEC P/N 16042739 GEOMETRIC DISTORTION CORRECTION.
4. SEE W/L FIND NO. 59 FOR P/S TRANSFORMER WIRE DESTINATIONS.
5. INSTALL TRANSFORMER WITH PRIMARY POWER CONNECTOR AND GROUND LEAD TOWARD REAR OF CABINET.

SUB ASSY CODE LETTER INFORMATION

FIND NO	SUB ASSY CODE LETTER DESCRIPTION
39	A - LOGIC MODULE
12	B - VIDEO DISPLAY
11	C - REAR PANEL ASSY
8	D - BASE
13	H - POWER SUPPLY

APL 15630992 THRU 15630995

DETACHED LISTS

UNLESS OTHERWISE SPECIFIED DIMENSIONS ARE IN INCHES TOLERANCES

DO NOT SCALE DRAWING

MATERIAL

FINISH

CONTROL DATA

FIRST USED ON: CC555G THRU K

DWN: R. Trautman 10-28-77

CHKD: [illegible]

ENGR: [illegible]

MFG: [illegible]

APPR: E. H. [illegible] 1-13-78

TITLE: MOD I DISPLAY TERMINAL W/O KEYBOARD

CODE IDENT: 15920

D

DRAWING NO: 15630992 THRU 15630999

SCALE: EC 15630984

SHEET 1 OF 2

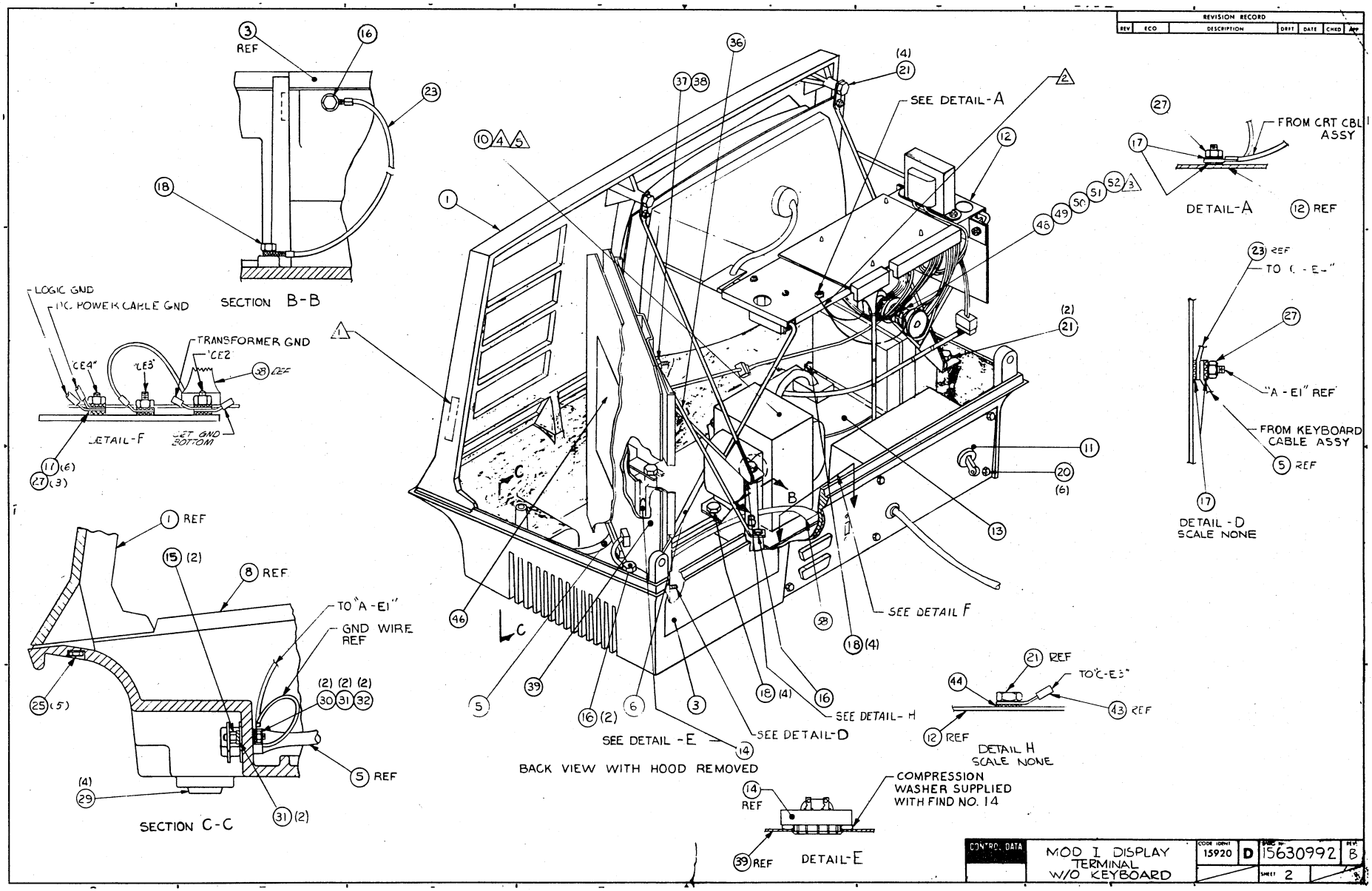
REVISION RECORD
REV ECO DESCRIPTION DRFT DATE CHKD APP
SECTION B-B
DETAIL-F
SET GND BOTTOM
SECTION C-C
BACK VIEW WITH HOOD REMOVED
SEE DETAIL-A
SEE DETAIL F
SEE DETAIL-H
SEE DETAIL-D
SEE DETAIL -E
DETAIL-A
DETAIL - D
SCALE NONE
DETAIL H
SCALE NONE
DETAIL-E
FROM CRT CBL ASSY
FROM KEYBOARD CABLE ASSY
TO "A-E1"
GND WIRE REF
TRANSFORMER GND
LOGIC GND
A.C. POWER CABLE GND
COMPRESSION WASHER SUPPLIED WITH FIND NO. 14
CONTRL DATA
MOD I DISPLAY TERMINAL W/O KEYBOARD
15920
D
15630992
B
SHEET 2

BUILD ARC 440

ASSEMBLY PARTS LIST

PRINT DATE 04-30-79 | PAGE 1 | PRE CHANGE NO. 00013472

DIV.	ASSEMBLY NUMBER	CD	REV.	DWG.	DESCRIPTION	MC	STATUS	STATUS DATE	ENG. RESP.	PRE DATE
0860	15630992	4	F	D	MOD 1 W/O KYBD 60HZ (TA)	N	REL	01-17-78	CC5550	04-30-79

FIND NO	LI	PART NUMBER	CD	M	QUANTITY	U/M	PART DESCRIPTION	MC	YLD	ECO. NO. IN	ECO. NO. OUT	S/N	WK IN	WK OUT
001	01	71452600	1		1	PC	BEZEL 12IN CRT	P						
002	01	71452800	7		1	PC	HOOD, TERMINAL (GOLD FINISH)	P						
003	01	71452900	5		1	PC	PANEL, ACCESS (FINISH-GOLD)	P						
005	01	61402300	0		1	PC	CABLE ASSY KYBD INTERNAL	A						
006	01	61402400	8		1	PC	CABLE ASSY DC POWER	A						
008	01	71491930	5		1	PC	BASE, TERMINAL (GOLD-FINISH)	P						
010	01	51915301	9		1	PC	XFMR STEP DOWN 120 220 240V	P		12702			7828	
011	01	61407798	0		1	PC	REAR PANEL ASSY 60HZ	A			12870			7905
011	02	61408216	2		1	PC	REAR PANEL ASSY 60HZ	A		12870			7905	
012	01	61407969	7		1	PC	VIDEO DISPLAY ASSY	N						
013	02	90460822	1		1	PC	REPLACED BY 90446105 13419	A		12702	13472		7828	7926
013	03	90446105	0		1	PC	CD ASSY 988D (PWR SPLY MOD)	A		13472			7926	
014	01	51908902	3		1	PC	ALARM AUDIBLE LUG FIG 2	P						
015	01	71455801	2		2	PC	STANDOFF MALE/FEMALE 4-40 STL	P						
016	01	51858501	3		4	PC	SCR TPG HEX-WSHR SLT 10X1/2L	B						
017	01	10126403	4		10	PC	WSHR, NO.10 EXT/T LK STL ZP	B						
018	02	51917790	1		9	PC	SCREW HEX WSHR HD 8-18X1/2	B		12702			7828	
020	01	00860303	7		6	PC	MSCR HEX-LK PLN 6-32X3/8 STL	B						
021	01	00860311	0		6	PC	MSCR HEX-LK PLN 8-32X3/8 STL	B						
023	01	61391105	6		2	PC	GND WIRE ASSY 7.5 16GA	A						
024	01	10127153	4		2	PC	MSCR PAN PHL 1/4-20X.500 STL	B						
025	01	51858503	9		5	PC	SCR TPG HEX-WSHR SLT 10X3/4L	B						

BUILD ARC 440

ASSEMBLY PARTS LIST

PRINT DATE 04-30-79 | PAGE 2 | PRE CHANGE NO. 00013472

DIV.	ASSEMBLY NUMBER	CD	REV.	DWG.	DESCRIPTION	MC	STATUS	STATUS DATE	ENG. RESP.	PRE DATE
0860	15630992	4	F	D	MOD 1 W/O KYBD 60HZ (TA)	N	REL	01-17-78	CC5550	04-30-79

FIND NO	LI	PART NUMBER	CD	M	QUANTITY	U/M	PART DESCRIPTION	MC	YLD	ECO. NO. IN	ECO. NO. OUT	S/N	WK IN	WK OUT
027	01	10125108	0		5	PC	NUT, HEX 10-32 MSCR STL ZP	B						
028	01	66300771	4		REF	PC	GENEALOGY MOD 1 DSPLY	D						
029	01	51805801	1		4	PC	BUMPER, RUBBER .300H SLF-STKG	P						
030	01	10125603	0		2	PC	WSHR, NO.4 TYP A PLN STL ZP	B						
031	01	10126400	0		4	PC	WSHR, NO.4 EXT/T LK STL ZP	B						
032	01	10125103	1		2	PC	NUT, HEX 4-40 MSCR STL ZP	B						
033	01	61407552	1		1	PC	FRONT PANEL ASSY MOD 1	A						
034	01	71491845	5		1	PC	PANEL BLANK, SWITCH ,PLASTIC)	P						
036	01	71489000	1		1	PC	SUPPORT LOGIC MODULE	P						
037	01	10125105	6		1	PC	NUT, HEX 6-32 MSCR STL ZP	B						
038	01	10126401	8		1	PC	WSHR, NO.6 EXT/T LK STL ZP	B						
039	01	61407657	8		1	PC	LOGIC MODULE ASSY	N						
043	01	61391104	9		1	PC	GND WIRE ASSY 4.5 16GA	A						
044	01	10126402	6		1	PC	WSHR, NO.8 EXT/T LK STL ZP	B						
046	01	71491949	5		1	PC	LABEL POWER INTERCONN	P						
048	01	51917054	2		1	PC	MAGNET BAR	P						
049	01	51917051	8		1	PC	MAGNET BAR	P						
050	01	51917052	6		1	PC	MAGNET BAR	P						
051	01	51917053	4		1	PC	MAGNET BAR	P						
052	01	51004063	7		100	OZ	ADHESIVE, SEALANT SIL RUBBER	B						
053	01	16042739	9		REF	PC	GEOM DIST CORRECTION	D						

BUILD ARC 440

ASSEMBLY PARTS LIST

PRINT DATE 04-30-79 | PAGE 3 | PRS CHANGE NO. 00013472

DIV.	ASSEMBLY NUMBER	CD	REV.	DWG.	DESCRIPTION	MC	STATUS	STATUS DATE	ENG. RESP.	PRS DATE
0860	15630992	4	E	D	MOD 1 W/O KYBD 60HZ (ITA)	N	REL	01-17-78	CC5550	04-30-79

FIND NO	SI	PART NUMBER	CD	QUANTITY	U/M	PART DESCRIPTION	MC	YLD	ECO. NO. IN	ECO. NO. OUT	E/N	WK IN	WK OUT
054	01	15010307	5	1	PC	ID EMBLEM, PRODUCT MEDIUM AL	P						
055	01	62199500	0	REF	PC	AC/DC PWR INTERCONN DIAG	D						
056	01	62200824	1	REF	PC	REPLACED BY 62201031 13164	D						
057	01	62200946	2	REF	PC	INTCONN DIAG SIGNAL	D						
058	01	61407631	3	1	PC	CABLE ASSY REAR PNL MONITOR	A						
059	01	61407980	4	REF	PC	WL/POWER SUPPLY	D		12702			7828	
060	01	16039400	3	REF	PC	POWER SUPPLY SPEC	D		12702			7828	
						0050 TOTAL LINES							

BUILD ARC 440

ASSEMBLY PARTS LIST

PRINT DATE 04-30-79 | PAGE 1 | PRE CHANGE NO. 00013472

DIV.	ASSEMBLY NUMBER	CD	REV.	DWG.	DESCRIPTION	MC	STATUS	STATUS DATE	ENG. RESP.	PRE DATE
0860	15630993	2	E	D	MOD 1 W/O KYBD FTZ 50HZ (TA)	N	REL	01-17-78	CC555H	04-30-79

T	FIND NO	LI	PART NUMBER	CD	M	QUANTITY	U/M	PART DESCRIPTION	MC	YLD	ECO. NO. IN	ECO. NO. OUT	S/N	WK IN	WK OUT
	001	01	71492176	4		1	PC	BEZEL CRT 12 IN PLASTIC	P						
	002	01	71491938	8		1	PC	HOOD, TERMINAL ≥SHIELDED+	P						
	003	01	71491939	6		1	PC	PANEL, BASE ≥SHIELDED+	P						
	005	01	61402300	0		1	PC	CABLE ASSY KYBD INTERNAL	A						
	006	01	61402400	8		1	PC	CABLE ASSY DC POWER	A						
	008	01	71492276	2		1	PC	BASE, TERMINAL (SHIELDED)	P						
	010	01	51915301	9		1	PC	XFMR STEP DOWN 120 220 240V	P		12702			7828	
	011	01	61407797	2		1	PC	REAR PANEL ASSY 50HZ	A			12870			7905
	011	02	61408215	4		1	PC	REAR PANEL ASSY 50HZ	A		12870			7905	
	012	01	61407969	7		1	PC	VIDEO DISPLAY ASSY	N						
	013	02	90460822	1		1	PC	REPLACED BY 90446105 13419	A		12702	13419		7828	7926
	013	03	90446105	0		1	PC	CD ASSY 9BBD (PWR SPLY MOD)	A		13419			7926	
	014	01	51908902	3		1	PC	ALARM AUDIBLE LUG FIG 2	P						
	015	01	71455801	2		2	PC	STANDOFF MALE/FEMALE 4-40 STL	P						
	016	01	51858501	3		4	PC	SCR TPG HEX-WSHR SLT 10X1/2L	B						
	017	01	10126403	4		10	PC	WSHR, NO.10 EXT/T LK STL ZP	B						
	018	02	51917790	1		9	PC	SCREW HEX WSHR HD 8-18X1/2	B		12702			7828	
	020	01	00860303	7		6	PC	MSCR HEX-LK PLN 6-32X3/8 STL	B						
	021	01	00860311	0		6	PC	MSCR HEX-LK PLN 8-32X3/8 STL	B						
	023	01	61391105	6		2	PC	GND WIRE ASSY 7.5 16GA	A						
	024	01	10127153	4		2	PC	MSCR PAN PHL 1/4-20X.500 STL	B						
	025	01	51858503	9		5	PC	SCR TPG HEX-WSHR SLT 10X3/4L	B						

BUILD ARC 440

ASSEMBLY PARTS LIST

PRINT DATE 04-30-79 | PAGE 2 | PRE CHANGE NO. 00013472

DIV.	ASSEMBLY NUMBER	CD	REV.	DWG.	DESCRIPTION	MC	STATUS	STATUS DATE	ENG. RESP.	PRE DATE
0860	15630993	2	E	D	MOD 1 W/O KYBD FTZ 50HZ (TA)	N	REL	01-17-78	CC555H	04-30-79

T	FIND NO	LI	PART NUMBER	CD	M	QUANTITY	U/M	PART DESCRIPTION	MC	YLD	ECO. NO. IN	ECO. NO. OUT	S/N	WK IN	WK OUT
	027	01	10125108	0		5	PC	NUT, HEX 10-32 MSCR STL ZP	B						
	028	01	66300771	4		REF	PC	GENEALOGY MOD 1 DSPLY	D						
	029	01	51805801	1		4	PC	BUMPER, RUBBER .300H SLF-STKG	P						
	030	01	10125603	0		2	PC	WSHR, NO.4 TYP A PLN STL ZP	B						
	031	01	10126400	0		4	PC	WSHR, NO.4 EXT/T LK STL ZP	B						
	032	01	10125103	1		2	PC	NUT, HEX 4-40 MSCR STL ZP	B						
	033	01	61407552	1		1	PC	FRONT PANEL ASSY MOD 1	A						
	034	01	71491845	5		1	PC	PANEL BLANK, SWITCH ,PLASTIC)	P						
	036	01	71489000	1		1	PC	SUPPORT LOGIC MODULE	P						
	037	01	10125105	6		1	PC	NUT, HEX 6-32 MSCR STL ZP	B						
	038	01	10126401	8		1	PC	WSHR, NO.6 EXT/T LK STL ZP	B						
	039	01	61407657	8		1	PC	LOGIC MODULE ASSY	N						
	043	01	61391104	9		1	PC	GND WIRE ASSY 4.5 16GA	A						
	044	01	10126402	6		1	PC	WSHR, NO.8 EXT/T LK STL ZP	B						
	046	01	71491949	5		1	PC	LABEL POWER INTERCONN	P						
	048	01	51917054	2		1	PC	MAGNET BAR	P						
	049	01	51917051	8		1	PC	MAGNET BAR	P						
	050	01	51917052	6		1	PC	MAGNET BAR	P						
	051	01	51917053	4		1	PC	MAGNET BAR	P						
	052	01	51004063	7		100	OZ	ADHESIVE, SEALANT SIL RUBBER	B						
	053	01	16042739	9		REF	PC	GEOM DIST CORRECTION	D						

BUILD ARC 440

ASSEMBLY PARTS LIST

PRINT DATE 04-30-79 | PAGE 3 | PKG CHANGE NO. 00013472

DIV.	ASSEMBLY NUMBER	CD	REV.	DWG.	DESCRIPTION	MC	STATUS	STATUS DATE	ENG. RESP.	PKG DATE
0860	15630993	2	E	D	MOD 1 W/O KYBD FTZ 50HZ (TA)	N	REL	01-17-78	CC555H	04-30-79

T	PMP NO	LT	PART NUMBER	CD	M	QUANTITY	U/M	PART DESCRIPTION	MC	YLD	ECO. NO. IN	ECO. NO. OUT	S/N	WK IN	WK OUT
	054	01	15010307	5		1	PC	ID EMBLEM, PRODUCT MEDIUM AL	P						
	055	01	62199500	0		REF	PC	AC/DC PWR INTERCONN DIAG	D						
	056	01	62200824	1		REF	PC	REPLACED BY 62201031 13164	D						
	057	01	62200946	2		REF	PC	INTCONN DIAG SIGNAL	D						
	058	01	61407631	3		1	PC	CABLE ASSY REAR PNL MONITOR	A						
	059	01	61407980	4		REF	PC	WL/POWER SUPPLY	D		12702			7828	
	060	01	16039400	3		REF	PC	POWER SUPPLY SPEC	D		12702			7828	
								0050 TOTAL LINES							

BUILD ARC 440

ASSEMBLY PARTS LIST

PRINT DATE 04-30-79 | PAGE 1 | PRE CHANGE NO. 00013472

DIV.	ASSEMBLY NUMBER	CD	REV.	DWG.	DESCRIPTION	MC	STATUS	STATUS DATE	ENG. RESP.	FILE DATE
0860	15630994	0	E	D	MOD 1 CL W/O KYBD 60HZ (TA)	N	REL	01-17-78	CC555J	04-30-79

T	FIND NO.	LI	PART NUMBER	CD	QUANTITY	U/M	PART DESCRIPTION	MC	YLD	ECO. NO. IN	ECO. NO. OUT	S/N	WK IN	WK OUT
	001	01	71452600	1	1	PC	BEZEL 12IN CRT	P						
	002	01	71452800	7	1	PC	HOOD, TERMINAL (GOLD FINISH)	P						
	003	01	71452900	5	1	PC	PANEL, ACCESS (FINISH-GOLD)	P						
	005	01	61402300	0	1	PC	CABLE ASSY KYBD INTERNAL	A						
	006	01	61402400	8	1	PC	CABLE ASSY DC POWER	A						
	008	01	71491930	5	1	PC	BASE, TERMINAL (GOLD-FINISH)	P						
	010	01	51915301	9	1	PC	XFMR STEP DOWN 120 220 240V	P		12702			7828	
	011	01	61407798	0	1	PC	REAR PANEL ASSY 60HZ	A			12870			7905
	011	02	61408216	2	1	PC	REAR PANEL ASSY 60HZ	A		12870			7905	
	012	01	61407969	7	1	PC	VIDEO DISPLAY ASSY	N						
	013	02	90460822	1	1	PC	REPLACED BY 90446105 13419	A		12702	13472		7828	7926
	013	03	90446105	0	1	PC	CD ASSY 9BBD (PWR SPLY MOD)	A		13472			7926	
	014	01	51908902	3	1	PC	ALARM AUDIBLE LUG FIG 2	P						
	015	01	71455801	2	2	PC	STANDOFF MALE/FEMALE 4-40 STL	P						
	016	01	51858501	3	4	PC	SCR TPG HEX-WSHR SLT 10X1/2L	B						
	017	01	10126403	4	10	PC	WSHR, NO.10 EXT/T LK STL ZP	B						
	018	02	51917790	1	9	PC	SCREW HEX WSHR HD 8-18X1/2	B		12702			7828	
	020	01	00860303	7	6	PC	MSCR HEX-LK PLN 6-32X3/8 STL	B						
	021	01	00860311	0	6	PC	MSCR HEX-LK PLN 8-32X3/8 STL	B						
	023	01	61391105	6	2	PC	GND WIRE ASSY 7.5 16GA	A						
	024	01	10127153	4	2	PC	MSCR PAN PHL 1/4-20X.500 STL	B						
	025	01	51858503	9	5	PC	SCR TPG HEX-WSHR SLT 10X3/4L	B						

BUILD ARC 440

ASSEMBLY PARTS LIST

PRINT DATE 04-30-79 | PAGE 2 | PRE CHANGE NO. 00013472

DIV.	ASSEMBLY NUMBER	CD	REV.	DWG.	DESCRIPTION	MC	STATUS	STATUS DATE	ENG. RESP.	FILE DATE
0860	15630994	0	E	D	MOD 1 CL W/O KYBD 60HZ (TA)	N	REL	01-17-78	CC555J	04-30-79

T	FIND NO.	LI	PART NUMBER	CD	QUANTITY	U/M	PART DESCRIPTION	MC	YLD	ECO. NO. IN	ECO. NO. OUT	S/N	WK IN	WK OUT
	027	01	10125108	0	5	PC	NUT, HEX 10-32 MSCR STL ZP	B						
	028	01	66300771	4	REF	PC	GENEALOGY MOD 1 DSPLY	D						
	029	01	51805801	1	4	PC	BUMPER, RUBBER .300H SLF-STKG	P						
	030	01	10125603	0	2	PC	WSHR, NO.4 TYP A PLN STL ZP	B						
	031	01	10126400	0	4	PC	WSHR, NO.4 EXT/T LK STL ZP	B						
	032	01	10125103	1	2	PC	NUT, HEX 4-40 MSCR STL ZP	B						
	033	01	61407552	1	1	PC	FRONT PANEL ASSY MOD 1	A						
	034	01	71491845	5	1	PC	PANEL BLANK, SWITCH ,PLASTIC)	P						
	036	01	71489000	1	1	PC	SUPPORT LOGIC MODULE	P						
	037	01	10125105	6	1	PC	NUT, HEX 6-32 MSCR STL ZP	B						
	038	01	10126401	8	1	PC	WSHR, NO.6 EXT/T LK STL ZP	B						
	039	01	61407656	0	1	PC	LOGIC MODULE ASSY	N						
	043	01	61391104	9	1	PC	GND WIRE ASSY 4.5 16GA	A						
	044	01	10126402	6	1	PC	WSHR, NO.8 EXT/T LK STL ZP	B						
	046	01	71491949	5	1	PC	LABEL POWER INTERCONN	P						
	048	01	51917054	2	1	PC	MAGNET BAR	P						
	049	01	51917051	8	1	PC	MAGNET BAR	P						
	050	01	51917052	6	1	PC	MAGNET BAR	P						
	051	01	51917053	4	1	PC	MAGNET BAR	P						
	052	01	51004063	7	100	OZ	ADHESIVE, SEALANT SIL RUBBER	B						
	053	01	16042739	9	REF	PC	GEOM DIST CORRECTION	D						

BUILD ARC 440

ASSEMBLY PARTS LIST

PRINT DATE	PAGE	FILE CHANGE NO.
04-30-79	3	00013472

DIV.	ASSEMBLY NUMBER	CD	REV.	DWG.	DESCRIPTION	MC	STATUS	STATUS DATE	ENG. RESP.	FILE DATE
0860	15630994	01	E	D	MOD 1 CL W/O KYBD 60HZ (IA)	N	REL	01-17-78	CC555J	04-30-79

FIND NO	LT	PART NUMBER	CD	M	QUANTITY	U/M	PART DESCRIPTION	MC	VLD	ECO. NO. IN	ECO. NO. OUT	E/H	WK IN	WK OUT
054	01	15010307	5		1	PC	ID EMBLEM, PRODUCT MEDIUM AL	P						
055	01	62199500	0		REF	PC	AC/DC PWR INTERCONN DIAG	D						
056	01	62200824	1		REF	PC	REPLACED BY 62201031 13164	D						
057	01	62200946	2		REF	PC	INTCONN DIAG SIGNAL	D						
058	01	61407631	3		1	PC	CABLE ASSY REAR PNL MONITOR	A						
059	01	61407980	4		REF	PC	WL/POWER SUPPLY	D		12702			7828	
060	01	16039400	3		REF	PC	POWER SUPPLY SPEC	D		12702			7828	
							0050 TOTAL LINES							

BUILD ARC 440

ASSEMBLY PARTS LIST

PRINT DATE 04-30-79 | PAGE 1 | FRZ CHANGE NO. 00013472

DIV.	ASSEMBLY NUMBER	CD	REV.	DWG.	DESCRIPTION	INC	STATUS	STATUS DATE	ENG. RESP.	FRZ DATE
0860	15630995	7	E	D	MOD 1 CL W/O KYBD FTZ 50HZ TA	N	REL	01-17-78	CC555K	04-30-79

T	FIND NO.	LI	PART NUMBER	CD	M	QUANTITY	U/M	PART DESCRIPTION	INC	YLD	ECO. NO. IN	ECO. NO. OUT	S/N	WK IN	WK OUT
	001	01	71492176	4		1	PC	BEZEL CRT 12 IN PLASTIC	P						
	002	01	71491938	8		1	PC	HOOD, TERMINAL (SHIELDED)	P						
	003	01	71491939	6		1	PC	PANEL, BASE (SHIELDED)	P						
	005	01	61402300	0		1	PC	CABLE ASSY KYBD INTERNAL	A						
	006	01	61402400	8		1	PC	CABLE ASSY DC POWER	A						
	008	01	71492276	2		1	PC	BASE, TERMINAL (SHIELDED)	P						
	010	01	51915301	9		1	PC	XFMR STEP DOWN 120 220 240V	P		12702			7828	
	011	01	61407797	2		1	PC	REAR PANEL ASSY 50HZ	A			12870			7905
	011	02	61408215	4		1	PC	REAR PANEL ASSY 50HZ	A		12870			7905	
	012	01	61407969	7		1	PC	VIDEO DISPLAY ASSY	N						
	013	02	90460822	1		1	PC	REPLACED BY 90446105 13419	A		12702	13419		7828	7926
	013	03	90446105	0		1	PC	CD ASSY 9BBD (PWR SPLY MOD)	A		13419			7926	
	014	01	51908902	3		1	PC	ALARM AUDIBLE LUG FIG 2	P						
	015	01	71455801	2		2	PC	STANDOFF MALE/FEMALE 4-40 STL	P						
	016	01	51858501	3		4	PC	SCR TPG HEX-WSHR SLT 10X1/2L	B						
	017	01	10126403	4		10	PC	WSHR, NO.10 EXT/T LK STL ZP	B						
	018	02	51917790	1		9	PC	SCREW HEX WSHR HD 8-18X1/2	B		12702			7828	
	020	01	00860303	7		6	PC	MSCR HEX-LK PLN 6-32X3/8 STL	B						
	021	01	00860311	0		6	PC	MSCR HEX-LK PLN 8-32X3/8 STL	B						
	023	01	61391105	8		2	PC	GND WIRE ASSY 7.5 16GA	A						
	024	01	10127153	4		2	PC	MSCR PAN PHL 1/4-20X.500 STL	B						
	025	01	51858503	9		5	PC	SCR TPG HEX-WSHR SLT 10X3/4L	B						

BUILD ARC 440

ASSEMBLY PARTS LIST

PRINT DATE 04-30-79 | PAGE 2 | FRZ CHANGE NO. 00013472

DIV.	ASSEMBLY NUMBER	CD	REV.	DWG.	DESCRIPTION	INC	STATUS	STATUS DATE	ENG. RESP.	FRZ DATE
0860	15630995	7	E	D	MOD 1 CL W/O KYBD FTZ 50HZ TA	N	REL	01-17-78	CC555K	04-30-79

T	FIND NO.	LI	PART NUMBER	CD	M	QUANTITY	U/M	PART DESCRIPTION	INC	YLD	ECO. NO. IN	ECO. NO. OUT	S/N	WK IN	WK OUT
	027	01	10125108	0		5	PC	NUT, HEX 10-32 MSCR STL ZP	B						
	028	01	66300771	4		REF	PC	GENEALOGY MOD 1 DSPLY	D						
	029	01	51805801	1		4	PC	BUMPER, RUBBER .300H SLF-STKG	P						
	030	01	10125603	0		2	PC	WSHR, NO.4 TYP A PLN STL ZP	B						
	031	01	10126400	0		4	PC	WSHR, NO.4 EXT/T LK STL ZP	B						
	032	01	10125103	1		2	PC	NUT, HEX 4-40 MSCR STL ZP	B						
	033	01	61407552	1		1	PC	FRONT PANEL ASSY MOD 1	A						
	034	01	71491845	5		1	PC	PANEL BLANK, SWITCH (PLASTIC)	P						
	036	01	71489000	1		1	PC	SUPPORT LOGIC MODULE	P						
	037	01	10125105	6		1	PC	NUT, HEX 6-32 MSCR STL ZP	B						
	038	01	10126401	8		1	PC	WSHR, NO.6 EXT/T LK STL ZP	B						
	039	01	61407656	0		1	PC	LOGIC MODULE ASSY	N						
	043	01	61391104	9		1	PC	GND WIRE ASSY 4.5 16GA	A						
	044	01	10126402	6		1	PC	WSHR, NO.8 EXT/T LK STL ZP	B						
	046	01	71491949	5		1	PC	LABEL POWER INTERCONN	P						
	048	01	51917054	2		1	PC	MAGNET BAR	P						
	049	01	51917051	8		1	PC	MAGNET BAR	P						
	050	01	51917052	6		1	PC	MAGNET BAR	P						
	051	01	51917053	4		1	PC	MAGNET BAR	P						
	052	01	51004063	7		100	OZ	ADHESIVE, SEALANT SIL RUBBER	B						
	053	01	16042739	9		REF	PC	GEOM DIST CORRECTION	D						

BUILD ARC 440

ASSEMBLY PARTS LIST

PRINT DATE 04-30-79 | PAGE 3 | PRE CHANGE NO. 00013472

DIV.	ASSEMBLY NUMBER	CO	REV.	DWG.	DESCRIPTION	SRC	STATUS	STATUS DATE	ENG. RESP.	FILE DATE
0860	15630995	7	E	0	MOD I CL W/O KYBD FTZ 50HZ TA	N	REL	01-17-78	CC555K	04-30-79

T	FIND NO	LI	PART NUMBER	CO	QUANTITY	U/M	PART DESCRIPTION	SRC	YLD	ECO. NO. IN	ECO. NO. OUT	S/N	WK IN	WK OUT
	054	01	15010307	5	1	PC	ID EMBLEM, PRODUCT MEDIUM AL	P						
	055	01	62199500	0	REF	PC	AC/DC PWR INTERCONN DIAG	D						
	056	01	62200824	1	REF	PC	REPLACED BY 62201031 13164	D						
	057	01	62200946	2	REF	PC	INTCONN DIAG SIGNAL	D						
	058	01	61407631	3	1	PC	CABLE ASSY REAR PNL MONITOR	A						
	059	01	61407980	4	REF	PC	WL/POWER SUPPLY	D		12702			7828	
	060	01	16039400	3	REF	PC	POWER SUPPLY SPEC	D		12702			7828	
							0050 TOTAL LINES							

62957400 E

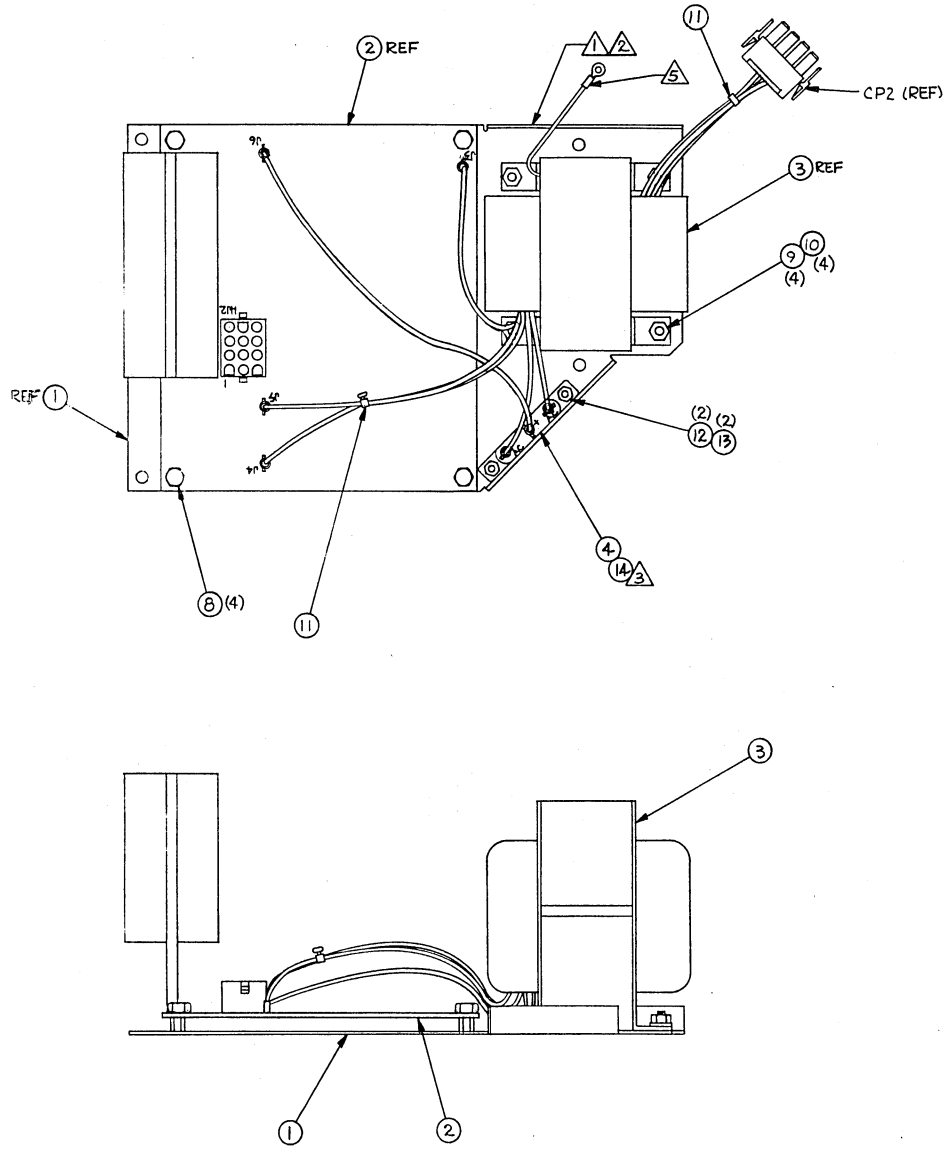

| SHEET REVISION STATUS | | |

BUILD ARC 230

ASSEMBLY PARTS LIST

PRINT DATE	PAGE	FILE CHANGE NO.
05-10-76	1	00011547

DIV.	ASSEMBLY NUMBER	CD	REV.	DWG.	DESCRIPTION	MC	STATUS	STATUS DATE	ENG. RESP.	FILE DATE
0860	61407447	4	B	0	POWER SPLY ASSY	A	REL	03-18-76	CC581	05-10-76

T	FIND NO	LI	PART NUMBER	CD	M	QUANTITY		U/M	PART DESCRIPTION	MC	YLD	ECO. NO. IN	ECO. NO. OUT	S/N	WK IN	WK OUT
	001	01	71487300	7		1		PC	CHASSIS (PWR SPLY)	P						
	002	01	90460538	3		1		PC	CD ASSY 6AFD-0 PWR SPLY	G						
	003	01	51915300	1		1		PC	TRANSFORMER (PWR SPLY)	P						
	004	01	51785200	0		1		PC	RECTIFIER FULLWAVE 50PIV 15A	P						
	006	01	62121109	3		2		PC	TERM RECP FSTN 16-14 AWG BLU	B						
	007	01	93464222	4			750	FT	WIR 16GA STRD RED 300V UL PVC	W						
	008	01	00860303	7		4		PC	MSCR SELF-LKG HEX HD 6-32X3/8	B						
	009	01	10125105	6		4		PC	NUT HEX MCH 6-32 STL CP OR ZP	B						
	010	01	00940202	5		4		PC	WASHER LOCK DISHED TOOTH NO.6	B						
	011	01	94277400	1		1		PC	STRAP CABLE TIE TYPE 1	P			11547			7621
	011	02	94277400	1		2		PC	STRAP CABLE TIE TYPE 1	P		11547			7621	
	012	01	10126400	0		2		PC	WSHR NO.4 EXT TOOTH LK TYP A	B						
	013	01	10125103	1		2		PC	NUT HEX MCH 4-40 STL CP OR ZP	B						
	014	01	51003962	1		AR		OZ	PASTE, HEAT XFR CMPD NON-COND	B						
	015	01	61405800	6		REF		PC	W/L POWER SUPPLY ASSY	D						
	016	01	16039400	3		REF		PC	POWER SUPPLY SPEC	D						
									0016 TOTAL LINES							

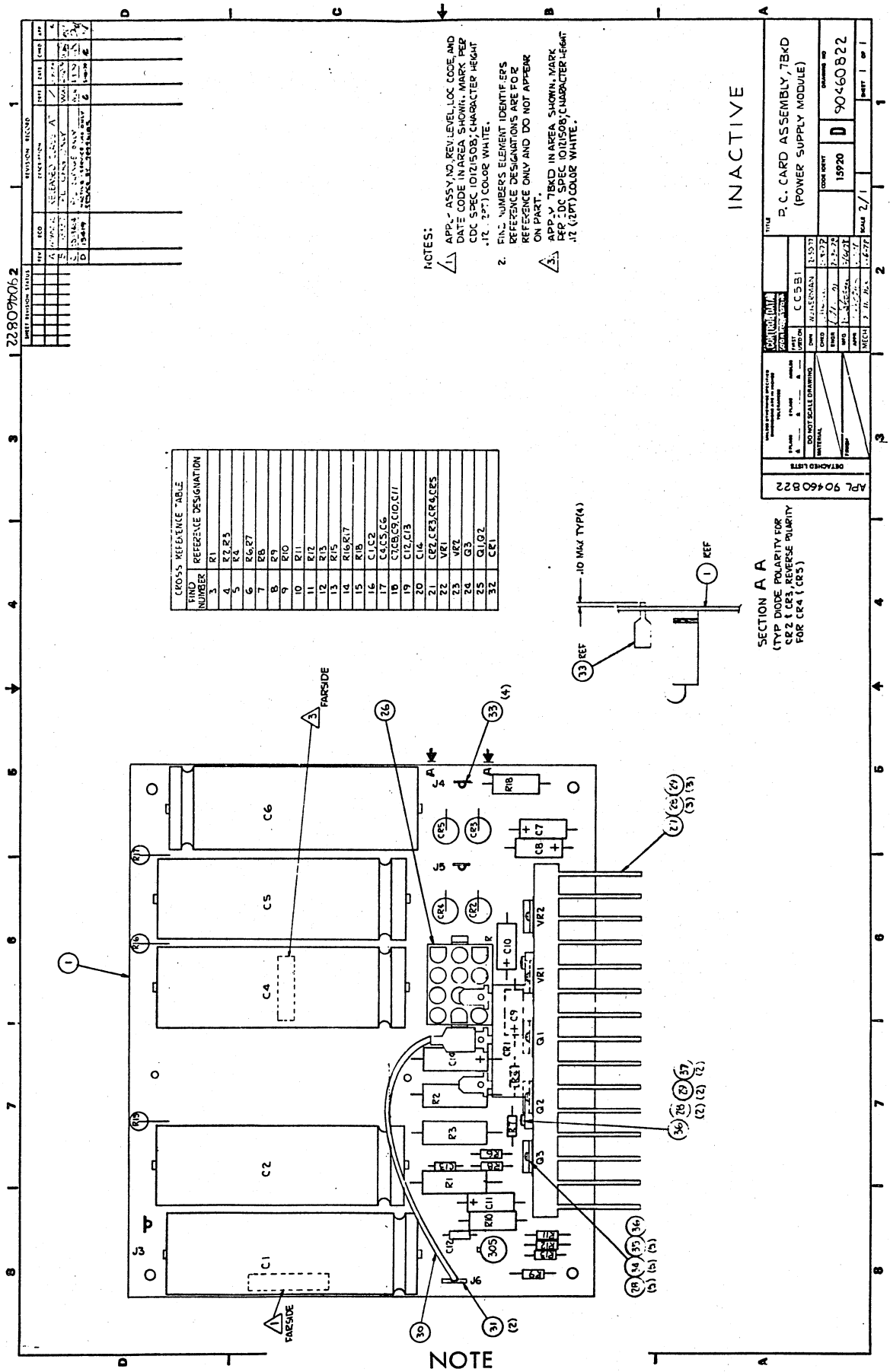

7BKD REPLACED BY 9BBD CARD,
PART NUMBER 90446105

BUILD ARC 216

ASSEMBLY PARTS LIST

PRINT DATE 04-26-79 | PAGE 1 | FILE CHANGE NO. 00013419

DIV.	ASSEMBLY NUMBER	CD	REV.	DWG.	DESCRIPTION	INC	STATUS	STATUS DATE	ENG. RESP.	FILE DATE
0860	90460822	1	D	D	REPLACED BY 90446105 13419	A	INA	04-20-79	CC581	04-26-79

FIND NO	LI	PART NUMBER	CD	M	QUANTITY	U/M	PART DESCRIPTION	INC	YLD	ECO. NO. IN	ECO. NO. OUT	S/N	WK IN	WK OUT
001	01	90460821	3		1	PC	REPLACED BY 90446104 13419	P						
002	01	95592600	1		1	PC	IC LM305 8PIN VOLTAGE REGLTR	P						
003	01	51608714	5		1	PC	RES FXD WW 50 OHM 5P 5WATT	P						
004	01	95596538	9		2	PC	RES FXD WW .30 OHM 10P 5WATT	P						
005	01	24500035	1		1	PC	RES FXD COMP 68 OHM 5P 1/4W	P						
006	01	24500025	2		2	PC	RES FXD COMP 27 OHM 5P 1/4W	P						
007	01	24500067	4		1	PC	RES FXD COMP 1500 OHM 5P 1/4W	P						
008	01	94360348	0		1	PC	RES FXD FM 3160 OHM 1P 1/4W	P						
009	01	24507125	3		1	PC	RES FXD COMP 100 OHM 5P 1WATT	P						
010	01	94360324	1		1	PC	RES FXD FM 1780 OHM 1P 1/4W	P						
011	01	94360444	7		1	PC	RES FXD FM 28.7K OHM 1P 1/4W	P						
012	01	24500090	6		1	PC	RES FXD COMP 13K OHM 5P 1/4W	P						
013	01	24507132	9		1	PC	RES FXD COMP 200 OHM 5P 1WATT	P						
014	01	24507167	5		2	PC	RES FXD COMP 1500 OHM 5P 1W	P						
015	01	24507161	8		1	PC	RES FXD COMP 820 OHM 5P 1WATT	P						
016	01	95577003	7		2	PC	CAP 14000UFD 15V	P			134048			7930
016	02	94383708	8		2	PC	CAP ELEC 14K UF -10+100P 15V	P		134048			7930	
017	01	95597404	3		3	PC	CAP FIG 1 7500UF -10+100P 35V	P			13404			7930
017	02	94383706	2		3	PC	CAP ELEC 7.5K UF -10.100P	P		13404			7930	
018	01	24504333	6		5	PC	CAP FXD TANT 2.2UF 20P 35VDCW	P						
019	01	51839108	1		2	PC	CAP FXD CER 47 PF 10P 100VDC	P						
020	01	24504358	3		1	PC	CAP FXD TANT 150UF 20P 10VDCW	P						

BUILD ARC 210

ASSEMBLY PARTS LIST

PRINT DATE 04-26-79 | PAGE 2 | FILE CHANGE NO. 00013419

DIV.	ASSEMBLY NUMBER	CD	REV.	DWG.	DESCRIPTION	INC	STATUS	STATUS DATE	ENG. RESP.	FILE DATE
0860	90460822	1	D	D	REPLACED BY 90446105 13419	A	INA	04-20-79	CC581	04-26-79

FIND NO	LI	PART NUMBER	CD	M	QUANTITY	U/M	PART DESCRIPTION	INC	YLD	ECO. NO. IN	ECO. NO. OUT	S/N	WK IN	WK OUT
021	01	51610800	8		4	PC	DIO, SILICON RECT 200V 3A	P						
022	01	15151503	8		1	PC	IC UA7800-12 3STD POS V REGLTR	P						
023	01	15151402	3		1	PC	IC UA7900-12 356C NEG V REGLTR	P						
024	01	50221903	3		1	PC	TRANSISTOR NPN SIL	P						
025	01	50221803	5		2	PC	XSTR TIP41A POWER NPN SILICON	P						
026	01	51906114	7		1	PC	CONN, 12PIN PC MTD TIN FIG 4	P						
027	01	51916852	0		1	PC	HEAT SINK	P						
028	01	10127104	7		10	PC	MSCR PAN PHL 4-40X.375 STL ZP	B						
029	01	10125801	0		5	PC	WSHR, NO.4 SPG LOCK STL ZP	B						
030	01	93464222	4		500	FT	WIR 16GA STRD RED 300V UL PVC	W						
031	01	62121109	3		2	PC	TERM RECP FSTN 16-14 AWG BLU	B						
032	01	51785200	0		1	PC	RECT, CT 15A 50PIV +POLARITY	P						
033	01	95594500	1		4	PC	LUG, TERM .250 O/C 16-14GA	B						
034	01	51632511	5		5	PC	SCREW INSU NO 4 NYLON	B						
035	01	51907804	2		5	PC	INSUL, PLSTC SEMI/MTG FIG B	P						
036	01	51003962	1		010	OZ	PASTE, HEAT XFR CMPD NON-COND	B			13337			7905
036	02	51003962	1		001	OZ	PASTE, HEAT XFR CMPD NON-COND	B		13337			7905	
037	01	10125603	0		2	PC	WSHR, NO.4 TYP A PLN STL ZP	B						
038	01	10121508	5		REF	PC	MARKING, INK STP-STENCIL-S/C	D						
039	01	16006500	9		REF	PC	FABRICATION SPECIFICATION	D						
040	01	90460818	9		REF	PC	SCH DIAG 78KD	D						

BUILD ARC 210

ASSEMBLY PARTS LIST

PRINT DATE 04-26-79 | PAGE 3 | FILE CHANGE NO. 00013419

DIV.	ASSEMBLY NUMBER	CD	REV.	DWG.	DESCRIPTION	INC	STATUS	STATUS DATE	ENG. RESP.	FILE DATE
0860	90460822	1	D	D	REPLACED BY 90446105 13419	A	INA	04-20-79	CC581	04-26-79

FIND NO	LI	PART NUMBER	CD	M	QUANTITY	U/M	PART DESCRIPTION	INC	YLD	ECO. NO. IN	ECO. NO. OUT	S/N	WK IN	WK OUT
							0043 TOTAL LINES							

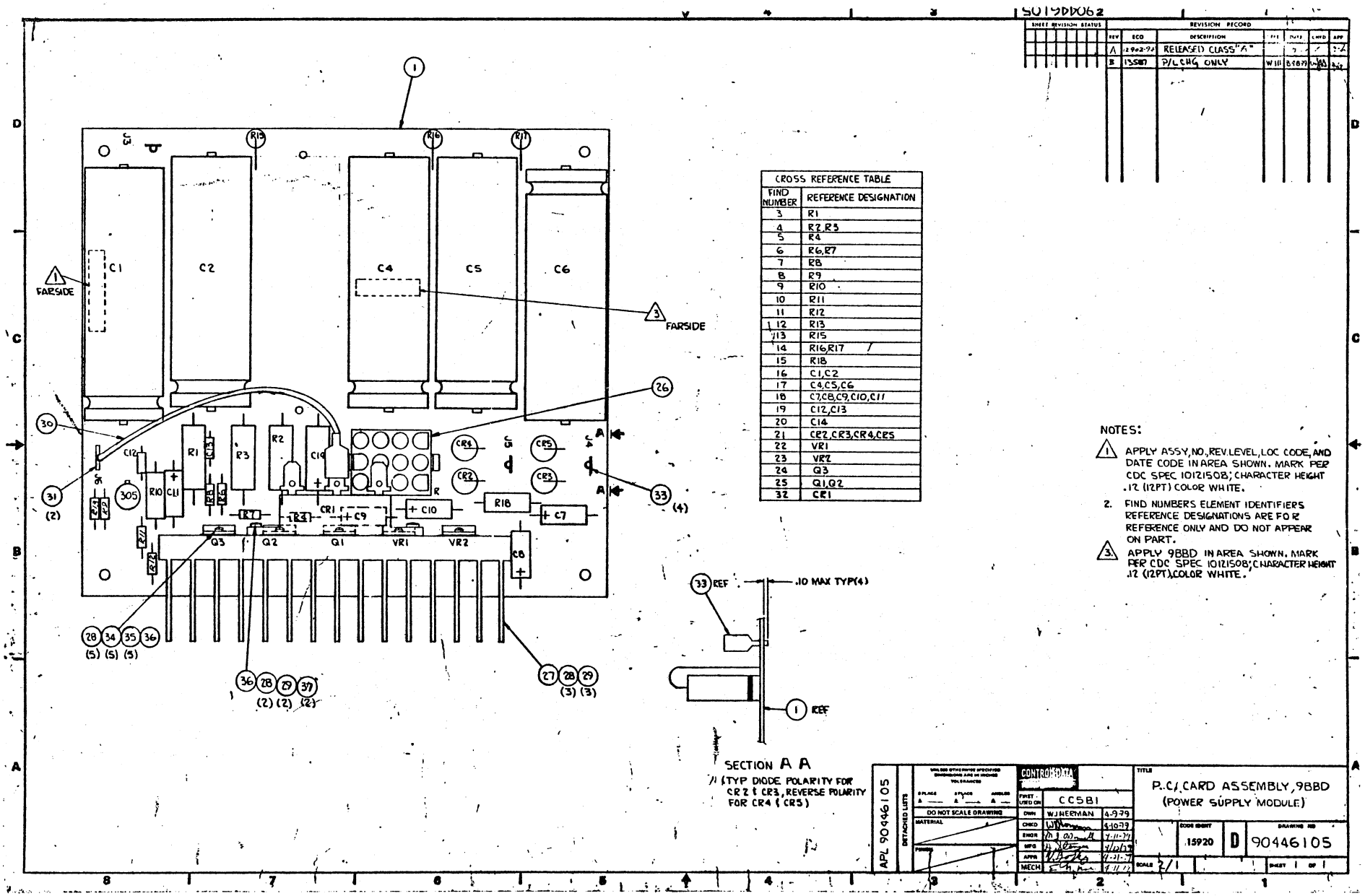

CROSS REFERENCE TABLE	
FIND NUMBER	REFERENCE DESIGNATION
3	R1
4	R2,R3
5	R4
6	R6,R7
7	R8
8	R9
9	R10
10	R11
11	R12
12	R13
13	R15
14	R16,R17
15	R18
16	C1,C2
17	C4,C5,C6
18	C7,C8,C9,C10,C11
19	C12,C13
20	C14
21	CR2,CR3,CR4,CR5
22	VR1
23	VR2
24	Q3
25	Q1,Q2
32	CR1

BUILD ARC 210

ASSEMBLY PARTS LIST

PRINT DATE 08-27-79 | PAGE 1 | FILE CHANGE NO. 00013587

DIV.	ASSEMBLY NUMBER	CD	REV.	DWG.	DESCRIPTION	MC	STATUS	STATUS DATE	ENG. RESP.	FILE DATE
0860	90446105	0	B	D	CD ASSY 9BBD (PWR SPLY MOD)	A	REL	04-13-79	CC5B1A	08-27-79

T	FIND NO	LI	PART NUMBER	CD	M	QUANTITY		U/M	PART DESCRIPTION	MC	YLD	ECO. NO. IN	ECO. NO. OUT	S/N	WK IN	WK OUT
	001	01	90446104	3		1		PC	PWB MULTI-USE (PWR SPLY)	P						
	002	01	95592600	1		1		PC	IC LM305 8PIN VOLTAGE REGTR	P						
	003	01	51608714	5		1		PC	RES FXD WW 50 OHM 5P 5WATT	P						
	004	01	95596538	9		2		PC	RES FXD WW .30 OHM 10P 5WATT	P						
	005	01	24500035	1		1		PC	RES FXD COMP 68 OHM 5P 1/4W	P						
	006	01	24500025	2		2		PC	RES FXD COMP 27 OHM 5P 1/4W	P						
	007	01	24500067	4		1		PC	RES FXD COMP 1500 OHM 5P 1/4W	P						
	008	01	94360348	0		1		PC	RES FXD FM 3160 OHM 1P 1/4W	P						
	009	01	24507125	3		1		PC	RES FXD COMP 100 OHM 5P 1WATT	P						
	010	01	94360324	1		1		PC	RES FXD FM 1780 OHM 1P 1/4W	P						
	011	01	94360444	7		1		PC	RES FXD FM 28.7K OHM 1P 1/4W	P						
	012	01	24500090	6		1		PC	RES FXD COMP 13K OHM 5P 1/4W	P						
	013	01	24507132	9		1		PC	RES FXD COMP 200 OHM 5P 1WATT	P						
	014	01	24507167	5		2		PC	RES FXD COMP 1500 OHM 5P 1W	P						
	015	01	24507161	8		1		PC	RES FXD COMP 820 OHM 5P 1WATT	P						
	016	01	94383708	8		2		PC	CAP ELEC 14K UF -10+100P 15V	P						
	017	01	94383706	2		3		PC	CAP ELEC 7.5K UF -10.100P	P						
	018	01	24504333	6		5		PC	CAP FXD TANT 2.2UF 20P 35VDCW	P						
	019	01	51839108	1		2		PC	CAP FXD CER 47 PF 10P 100VDC	P						
	020	01	24504358	3		1		PC	CAP FXD TANT 150UF 20P 10VDCW	P						
	021	01	51610800	8		4		PC	DIO, SILICON RECT 200V 3A	P						

BUILD ARC 210

ASSEMBLY PARTS LIST

PRINT DATE 08-27-79 | PAGE 2 | FILE CHANGE NO. 00013587

DIV.	ASSEMBLY NUMBER	CD	REV.	DWG.	DESCRIPTION	MC	STATUS	STATUS DATE	ENG. RESP.	FILE DATE
0860	90446105	0	B	D	CD ASSY 9BBD (PWR SPLY MOD)	A	REL	04-13-79	CC5B1A	08-27-79

T	FIND NO	LI	PART NUMBER	CD	M	QUANTITY		U/M	PART DESCRIPTION	MC	YLD	ECO. NO. IN	ECO. NO. OUT	S/N	WK IN	WK OUT
	022	01	15151503	8		1		PC	IC UA7800+12 357D POS V REGTR	P			13587			8010
	022	02	15163453	2		1		PC	IC TYPE UA7800 UA7900 SERIES	P		13587			8010	
	023	01	15151402	3		1		PC	IC UA7900+12 356C NEG V REGTR	P			13587			8010
	023	02	15163456	5		1		PC	IC TYPE UA7800 UA7900 SERIES	P		13587			8010	
	024	01	50221903	3		1		PC	TRANSISTOR NPN SIL	P						
	025	01	50221803	5		2		PC	XSTR TIP41A POWER NPN SILICON	P						
	026	01	51906114	7		1		PC	CONN, 12PIN PC MTD TIN FIG 4	P						
	027	01	51916852	0		1		PC	HEAT SINK	P						
	028	01	10127104	7		10		PC	MSCR PAN PHL 4-40X.375 STL ZP	B						
	029	01	10129801	0		5		PC	WSHR, NO.4 SPG LOCK STL ZP	B						
	030	01	93464222	4			500	FT	WIR 16GA STRD RED 300V UL PVC	W						
	031	01	62121109	3		2		PC	TERM RECP FSTN 16-14 AWG BLU	B						
	032	01	51785200	0		1		PC	RECT, CT 15A 50PIV +POLARITY	P						
	033	01	95594500	1		4		PC	LUG, TERM .250 Q/C 16-14GA	B						
	034	01	51632511	5		5		PC	SCREW INSU NO 4 NYLON	B						
	035	01	51907804	2		5		PC	INSUL, PLSTC SEMI/MTG FIG B	P						
	036	01	51003962	1			001	OZ	PASTE, HEAT XFR CMPD NON-COND	B						
	037	01	10125603	0		2		PC	WSHR, NO.4 TYP A PLN STL ZP	B						
	038	01	10121508	5		REF		PC	MARKING, INK STP-STENCIL-S/C	D						
	039	01	16006500	9		REF		PC	FABRICATION SPECIFICATION	D						
	040	01	90460818	9		REF		PC	SCH DIAG 7BKD	D						

BUILD ARC 210

ASSEMBLY PARTS LIST

PRINT DATE 08-27-79 | PAGE 3 | FILE CHANGE NO. 00013587

DIV.	ASSEMBLY NUMBER	CD	REV.	DWG.	DESCRIPTION	MC	STATUS	STATUS DATE	ENG. RESP.	FILE DATE
0860	90446105	0	B	D	CD ASSY 9BBD (PWR SPLY MOD)	A	REL	04-13-79	CC5B1A	08-27-79

T	FIND NO	LI	PART NUMBER	CD	M	QUANTITY		U/M	PART DESCRIPTION	MC	YLD	ECO. NO. IN	ECO. NO. OUT	S/N	WK IN	WK OUT
									0042 TOTAL LINES							

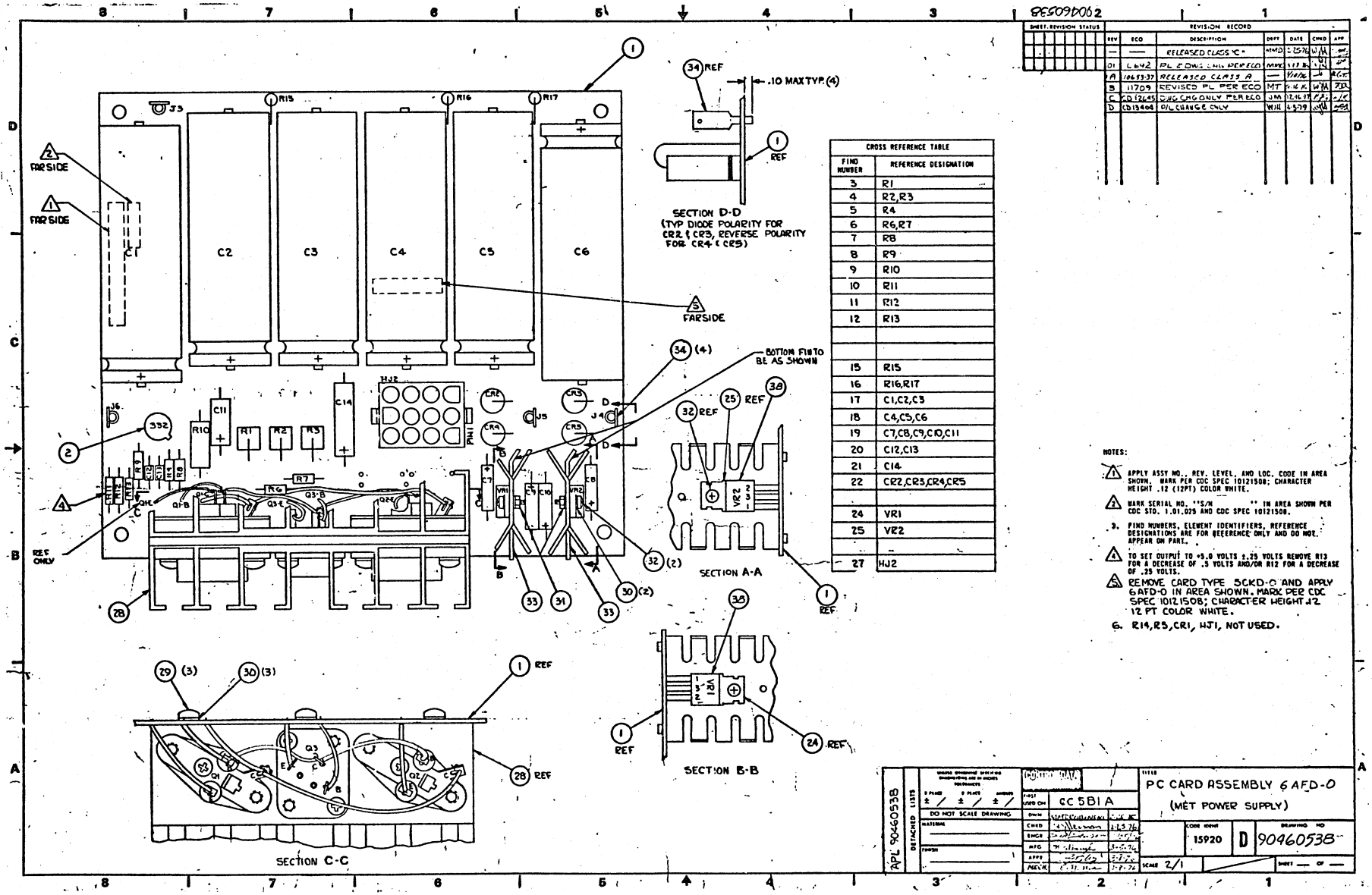

CROSS REFERENCE TABLE	
FIND NUMBER	REFERENCE DESIGNATION
3	R1
4	R2,R3
5	R4
6	R6,R7
7	R8
8	R9
9	R10
10	R11
11	R12
12	R13
15	R15
16	R16,R17
17	C1,C2,C3
18	C4,C5,C6
19	C7,C8,C9,C10,C11
20	C12,C13
21	C14
22	CR2,CR3,CR4,CR5
24	VR1
25	VR2
27	HJ2

NOTES:

1. APPLY ASSY NO., REV. LEVEL, AND LOC. CODE IN AREA SHOWN. MARK PER CDC SPEC 10121508; CHARACTER HEIGHT .12 (12PT) COLOR WHITE.
2. MARK SERIAL NO. "S/N " IN AREA SHOWN PER CDC STD. 1.01.025 AND CDC SPEC 10121508.
3. FIND NUMBERS, ELEMENT IDENTIFIERS, REFERENCE DESIGNATIONS ARE FOR REFERENCE ONLY AND DO NOT APPEAR ON PART.
4. TO SET OUTPUT TO +5.0 VOLTS ±.25 VOLTS REMOVE R13 FOR A DECREASE OF .5 VOLTS AND/OR R12 FOR A DECREASE OF .25 VOLTS.
5. REMOVE CARD TYPE 5CKD-0 AND APPLY 6AFD-0 IN AREA SHOWN. MARK PER CDC SPEC 10121508; CHARACTER HEIGHT .12 12 PT COLOR WHITE.
6. R14,R5,CR1, HJ1, NOT USED.

REVISION RECORD						
REV	ECO	DESCRIPTION	DRFT	DATE	CHKD	APP
—	—	RELEASED CLASS "C"	MMD	2-25-76	WJH	[illegible]
01	L 642	PL & DWG CHG PER ECO	MMC	4-17-76	[illegible]	[illegible]
A	10653-37	RELEASED CLASS A	—	4/10/76	[illegible]	[illegible]
B	11709	REVISED PL PER ECO	MT	4-16-76	WJH	[illegible]
C	CD 12645	DWG CHG ONLY PER ECO	JM	12-16-77	[illegible]	[illegible]
D	CD13404	P/L CHANGE ONLY	WJH	4-3-79	[illegible]	[illegible]

APL 90460538

DETACHED LISTS

DO NOT SCALE DRAWING

CONTROL DATA

FIRST USED ON: CC 5B1A

TITLE: PC CARD ASSEMBLY 6AFD-0 (MET POWER SUPPLY)

CODE IDENT 15920 | D | DRAWING NO 90460538

SCALE 2/1

SHEET — OF —

62957400 F

BUILD ARC 210

ASSEMBLY PARTS LIST

PRINT DATE 03-21-79 | PAGE 1 | PRE CHANGE NO. 00013404

DIV.	ASSEMBLY NUMBER	CD	REV.	DWG.	DESCRIPTION	MC	STATUS	STATUS DATE	ENG. RESP.	FILE DATE
0860	90460538	3	D	D	CD ASSY 6AFD-0 PWR SPLY	G	REL	03-18-76	CC5R1A	03-21-79

T	FIND NO.	LI	PART NUMBER	CD	QUANTITY	U/M	PART DESCRIPTION	MC	YLD	ECO. NO. IN	ECO. NO. OUT	S/N	WK IN	WK OUT
	001	01	90436600	2	1	PC	PW-BD SCKD-0(POWER SUPPLY)	P						
	002	01	95592600	1	1	PC	IC LM305 8PIN VOLTAGE REGLTR	P						
	003	01	51608714	5	1	PC	RES FXD WW 50 OHM 5P 5WATT	P						
	004	01	95596538	9	2	PC	RES FXD WW .30 OHM 10P 5WATT	P						
	005	01	24500035	1	1	PC	RES FXD COMP 68 OHM 5P 1/4W	P						
	006	01	24500025	2	2	PC	RES FXD COMP 27 OHM 5P 1/4W	P						
	007	01	24500067	4	1	PC	RES FXD COMP 1500 OHM 5P 1/4W	P						
	008	01	94360348	0	1	PC	RES FXD FH 3160 OHM 1P 1/4W	P						
	009	01	24507125	3	1	PC	RES FXD COMP 100 OHM 5P 1WATT	P						
	010	01	94360324	1	1	PC	RES FXD FH 1780 OHM 1P 1/4W	P						
	011	01	94360444	7	1	PC	RES FXD FH 28.7K OHM 1P 1/4W	P						
	012	01	24500090	6	1	PC	RES FXD COMP 13K OHM 5P 1/4W	P						
	015	01	24507132	9	1	PC	RES FXD COMP 200 OHM 5P 1WATT	P						
	016	01	24507167	5	2	PC	RES FXD COMP 1500 OHM 5P 1W	P						
	017	01	95577003	7	3	PC	CAP 14000UFD 15V	P			13404			7930
	017	02	94383708	8	3	PC	CAP ELEC 14K UF -10+100P 15V	P		13404			7930	
	018	01	95597404	3	3	PC	CAP FIG 1 7500UF -10+100P 35V	P			13404			7930
	018	02	94383706	2	3	PC	CAP ELEC 7.5K UF -10.100P	P		13404			7930	
	019	01	24504333	6	5	PC	CAP FXD TANT 2.2UF 20P 35VDCW	P						
	020	01	51R39108	1	2	PC	CAP FXD CER 47 PF 10P 100VDC	P						
	021	01	24504358	3	1	PC	CAP FXD TANT 150UF 20P 10VDCW	P						
	022	01	51610800	8	4	PC	DIO, SILICON RECT 200V 3A	P						

BUILD ARC 210

ASSEMBLY PARTS LIST

PRINT DATE 03-21-79 | PAGE 2 | PRE CHANGE NO. 00013404

DIV.	ASSEMBLY NUMBER	CD	REV.	DWG.	DESCRIPTION	MC	STATUS	STATUS DATE	ENG. RESP.	FILE DATE
0860	90460538	3	D	D	CD ASSY 6AFD-0 PWR SPLY	G	REL	03-18-76	CC5R1A	03-21-79

T	FIND NO.	LI	PART NUMBER	CD	QUANTITY	U/M	PART DESCRIPTION	MC	YLD	ECO. NO. IN	ECO. NO. OUT	S/N	WK IN	WK OUT
	024	01	15151803	8	1	PC	IC UA7800-12 3STD POS V REGLTR	P						
	025	01	15151402	3	1	PC	IC UA7900-12 356C NEG V REGLTR	P						
	027	02	51906114	7	1	PC	CONN, 12PIN PC MTD TIN FIG 4	P		11709			7648	
	028	01	61405700	8	1	PC	HEAT SINK ASSY LIAT MOD 1	G						
	029	01	10127175	7	3	PC	MSCR PAN PHL 4-40X .438	B						
	030	01	10125801	0	5	PC	WSHR, SPG LOCK NO.4 STL C/ZP	B						
	031	01	10125103	1	2	PC	NUT, HEX 4-40 MSCR STL ZP	B						
	032	01	10127102	1	2	PC	MSCR PAN PHL 4-40X.250	B			11774			7742
	032	02	10127103	9	2	PC	MSCR PAN PHL 4-40X.312	B		11774			7742	
	033	01	51906601	3	2	PC	HT SINK, SEMI FIG 3 ALUM BLK	P						
	034	01	95594500	1	4	PC	LUG, TERM .250 O/C 16-14GA	B						
	035	01	16006500	9	REF	PC	FABRICATION SPECIFICATION	D						
	036	01	10121508	5	REF	PC	MARKING, INK STP-STENCIL-S/C	D						
	037	01	90436500	4	REF	PC	SCH DIAG SCKD-0 POWER SUPPLY	D						
	038	01	51003962	1	AR	OZ	PASTE, HEAT XFR CMPD NON-COND	B			13025			7837
	038	02	51003962	1	001	OZ	PASTE, HEAT XFR CMPD NON-COND	B		13025			7837	

0038 TOTAL LINES

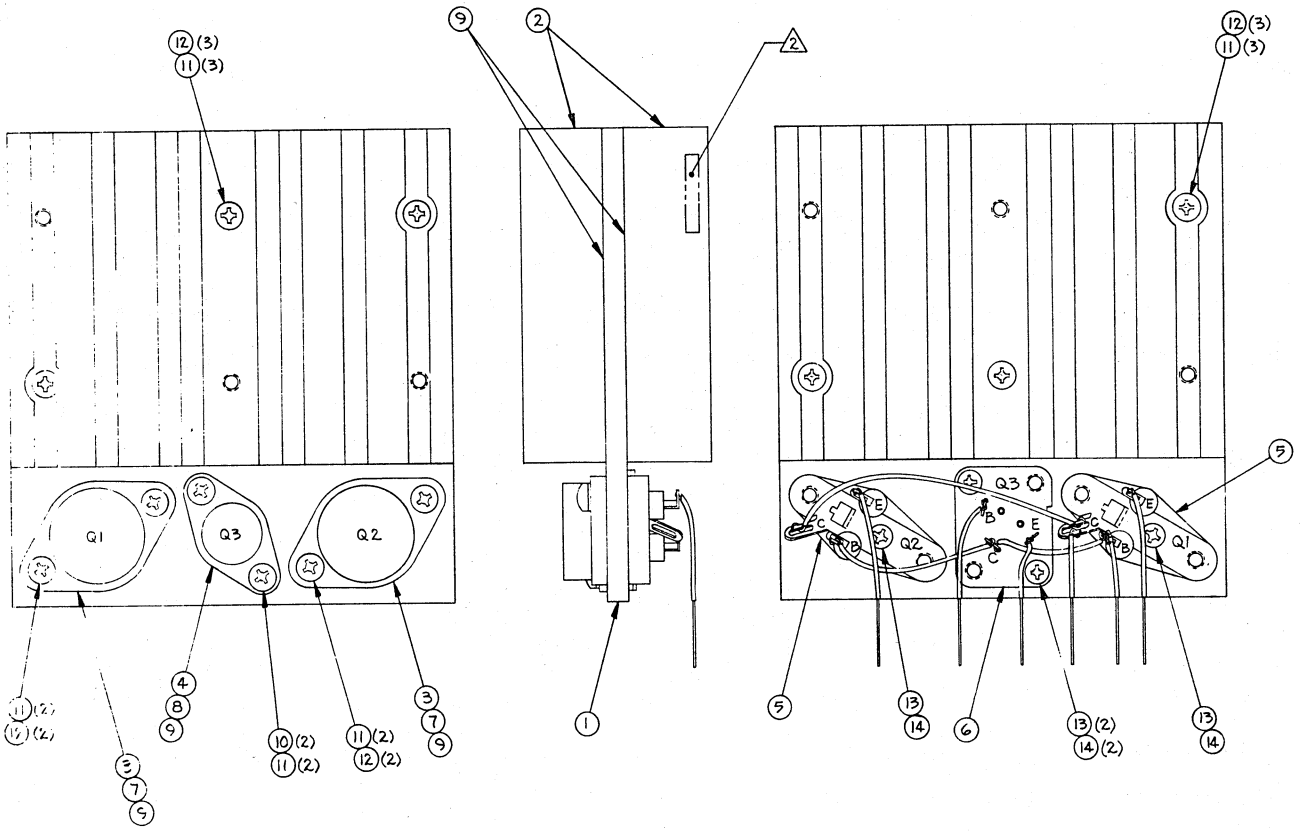

SHEET REVISION STATUS	REVISION RECORD					
REV	ECO	DESCRIPTION	DRFT	DATE	CHKD	APP
		RELEASED CLASS C	DAK			
A	10653-27	RELEASED CLASS A				

NOTES:

1. REFERENCE DESIGNATIONS ARE SHOWN FOR REFERENCE ONLY AND MAY NOT APPEAR ON PART.
2. MARK "ASSY 61405700" IN AREA SHOWN PER CDC SPEC 10121508.

APL 61405700 DETACHED LISTS

UNLESS OTHERWISE SPECIFIED DIMENSIONS ARE IN INCHES TOLERANCES 3 PLACE ± 2 PLACE ± ANGLES ±

DO NOT SCALE DRAWING

MATERIAL

FINISH

CONTROL DATA

FIRST USED ON	CC543A	
DWN	DAK	10-16-75
CHKD		10-23-75
ENGR		10/31/75
MFG		11-3-75
APPR		12-31-75

TITLE: HEAT SINK ASSY

CODE IDENT 15920 | D | DRAWING NO 61405700

SCALE 2/1 | NHA 90436700 | SHEET / OF /

BUILD ARC 230

ASSEMBLY PARTS LIST

PRINT DATE	PAGE	FILE CHANGE NO.
01-06-76	1	10653-27

DIV.	ASSEMBLY NUMBER	CD	REV.	DWG.	DESCRIPTION	MC	STATUS	STATUS DATE	ENG. RESP.	FILE DATE
0860	61405700	8	A	D	HEAT SINK ASSY LIAT MOD 1	N	REL	12-31-75	CC5B1A-D	01-07-76

T	FIND NO	LI	PART NUMBER	CD	M	QUANTITY		U/M	PART DESCRIPTION	MC	YLD	ECO. NO. IN	ECO. NO. OUT	S/N	WK IN	WK OUT
	001	01	71487000	3		1		PC	BRKT-MTG(HEAT SINK)	P						
	002	01	51915600	4		2		PC	HEAT SINK	P						
	003	01	94791000	6		2		PC	XSTR NPN T03	P						
	004	01	51770400	3		1		PC	XSTR TO-66 PNP SIL	P						
	005	01	51605400	4		2		PC	SOCKET TRANSISTOR TO-3	P						
	006	01	94835100	2		1		PC	PWR SKT, XSTR PTS-4	P						
	007	01	16798719	7		2		PC	WASHER MICA TO-3 DISK	B						
	008	01	16798720	5		1		PC	WASHER MICA TO-66 DISK	B						
	009	01	51003962	1		AR		OZ	HEAT TRANSFER COMPOUND	B						
	010	01	18607914	1		2		PC	SCR, TPG PAN PHL 6-20X1/2 STL	B						
	011	01	10126401	8		12		PC	WASHER EXT TOOTH LOCK NO.6	B						
	012	01	10127115	3		10		PC	SCREW MACH 6-32X5/8 PAN HD	B						
	013	01	10127102	1		4		PC	SCREW MACH PAN HD 4-40X1/4 ST	B						
	014	01	10126400	0		4		PC	WASHER EXT TOOTH LOCK NO. 4	B						
	015	01	65449556	3		1	167	FT	WIR 16 GA SLD 1000V MIL W 76B	W						
	016	01	61405600	0		REF		PC	W/L HEAT SINK ASSY LIAT MOD 1	D						
									001A TOTAL LINES							

DWN	DAK	10-16-75	CONTROL DATA	TITLE W/L HEAT SINK ASSY	PREFIX WL	DOCUMENT NO. 61405600	REV. A
CHKD		10-23-75					
ENG		10-23-75					
MFG		12-31-75		FIRST USED ON CC543A	NHA 61405700	SHEET 1 of 2	
APPR	E. H. M.	12-31-75	CODE IDENT 15920				

SHEET REVISION STATUS

2	1
A	A

REVISION RECORD

REV	ECO	DESCRIPTION	DRFT	DATE	APP
		RELEASED CLASS C		10/24/75	
A	10653-27	RELEASED CLASS A		12/31/75	M.E.T.

NOTES:

1. For find no. identification see APL 61405700.
2. Destination end of wire to be connected at assy 90436700.
3. Strip wire back even with heat sink bracket (approx. .60) as shown on drawing 61405700.

DETACHED LISTS

AA3180 REV. 8/71 PRINTED IN U.S.A.

CONTROL DATA — CODE IDENT 15920 — SHEET 2 — WL — DOCUMENT NO. 61405600 — REV. A

CONDUCTOR IDENT.	FIND NO.	GAUGE (REF.)	COLOR (REF.)	LENGTH (APPROX)	ORIGIN		ACCESS FIND NO.	DESTINATION		ACCESS FIND NO.	REMARKS
1	15	16	2	3	Q2	C		Q1	C		
2	↑	↑	↑	1.5	Q1	C		5CKD-D			2
3	↑	↑	↑	1.5	Q2	E		5CKD-D			2
4	↑	↑	↑	1.5	Q2	B		Q3	C		
5	↑	↑	↑	1.5	Q3	C		Q1	B		
6	↑	↑	↑	1.5	Q3	B		5CKD-D			2
7	↑	↑	↑	1.0	Q3	E		↑			2
8	↓	↓	↓	1.0	Q1	B		↓			2
9	15	16	2	1.5	Q1	E		5CKD-D			2

AA3183 REV. 8/71 PRINTED IN U.S.A.

DWN	D. King	10-17-75	CONTROL DATA	TITLE	PREFIX	DOCUMENT NO.	REV.
CHKD	R. Trautman	10-23-75		W/L POWER SUPPLY	WL	61405800	B
ENG	[illegible]	10-23-75					
MFG	[illegible]	12-31-75		FIRST USED ON	NHA	SHEET	
APPR	E. H. Noa	12-31-75	CODE IDENT 15920	CC5B1A	61402700	1 of 2	

SHEET REVISION STATUS

2	1
A	A
B	B

REVISION RECORD

REV	ECO	DESCRIPTION	DRFT	DATE	APP
		RELEASED CLASS C		10/20/75	[illegible]
A	10653-27	RELEASED CLASS A		12/31/75	W.C.T.
B	11434	REMOVE COND. ID. 5	[illegible]	4/5/76	[illegible]

NOTES:
1. For Find Number Identification see Assembly 61402700

DETACHED LISTS

AA3180 REV. 8-71

PRINTED IN U.S.A.

CONTROL DATA	CODE IDENT	SHEET	WL	DOCUMENT NO.	REV.
	15920	2		61405800	B

CONDUCTOR IDENT.	FIND NO.	GAUGE (REF.)	COLOR (REF.)	LENGTH (APPROX)	ORIGIN		ACCESS FIND NO.	DESTINATION		ACCESS FIND NO.	REMARKS
1	7	16	2	9.0	CR1	+	6	SCKD	J6	6	
2			2		T1			CR1	AC		
3			2		T1			CR1	AC		
4			0/2		T1			SCKD	J3		
5											
6			8		T1			SCKD	J4		
7			8		T1			SCKD	J5		

AA3183 REV. 8/71

PRINTED IN U.S.A.

DWN	D. L. Craig	12/12/77	CONTROL DATA	TITLE: WIRE LIST, POWER SUPPLY	PREFIX: WL	DOCUMENT NO.: 61407980	REV.: A
CHKD							
ENG	D. L. Craig	12/12/77		FIRST USED ON: CC5B1A	NHA: 15629200	SHEET: 1 of 2	
MFG	[illegible]	12/12/77					
APPR	E. M. Noe	12-13-77	CODE IDENT				

SHEET REVISION STATUS

2	1
A	A

REVISION RECORD

REV	ECO	DESCRIPTION	DRFT	DATE	APP
A	12490-7	RELEASED CLASS A	/	12/13/77	MCX

NOTES:

DETACHED LISTS

AA3180 REV. 8-71

PRINTED IN U.S.A.

CONTROL DATA | CODE IDENT | SHEET 2 | WL | DOCUMENT NO. 61407980 | REV. A

CONDUCTOR IDENT.	FIND NO.	GAUGE (REF.)	COLOR (REF.)	LENGTH (APPROX)	ORIGIN		ACCESS FIND NO.	DESTINATION		ACCESS FIND NO.	REMARKS
1			2		T1			CR1	AC		
2			2		T1			CR1	AC		
3			0		T1			7BKD	J3		
4			8		T1			7BKD	J4		
5			8		T1			7BKD	J5		

AA3183 REV. 8/71

PRINTED IN U.S.A.

DWN			CONTROL DATA	TITLE	PREFIX	DOCUMENT NO.	REV.
CHKD				CABLE ASSY KYBD INTERNAL	A	61402300	C
ENG				FIRST USED ON	NHA	SHEET	
MFG		12-31-75	CODE IDENT	CC5B1A	15629200	1 of 4	
APPR		12-31-75	15920				

SHEET REVISION STATUS

4	3	2	1
01		01	01
A	A	A	A
A	A	B	B
A	A	C	C

REVISION RECORD

REV	ECO	DESCRIPTION	DRFT	DATE	APP
		RELEASED CLASS C			
01	CE44	EQUIP. NO. WAS CC5A3A/B/F/D REVISED WIRE LENGTHS	TD	11/26/75	
A	10653-27	RELEASED CLASS A		12/31/75	M.G.T.
B	CD11547	Revised per ECO	rt	6/...	
C	13089	CHG P/N to	WJG		

NOTES:

1. Bulk identify with CDC part number.

APL 61402300

DETACHED LISTS

AA316C REV. B 71 PRINTED IN U.S.A.

CONTROL DATA		CODE IDENT	SHEET		DOCUMENT NO.	REV.
		15920	2	A	61402300	C

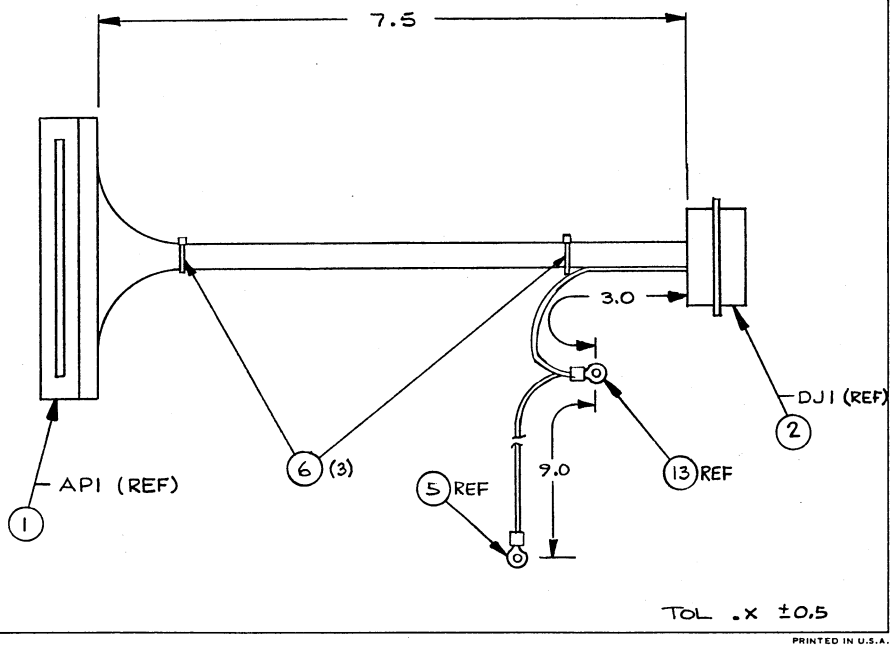

AA318S PRINTED IN U.S.A.

CONTROL DATA		CODE IDENT 15920	SHEET 3	WL	DOCUMENT NO. 61402300	REV. A

CONDUCTOR IDENT.	FIND NO.	GAUGE (REF.)	COLOR (REF.)	LENGTH (APPROX)	ORIGIN		ACCESS FIND NO.	DESTINATION		ACCESS FIND NO.	REMARKS
1	8	24	9	8.0	AP1	4	3	DJ1	1	4	Co Indicator
2						1			2		Page/Scroll
3						12			3		Kybd Data 2^6
4						13			4		Kybd Data 2^5
5						14			5		Kybd Data 2^4
6						15			6		Kybd Data 2^3
7						16			7		Kybd Data 2^2
8						17			8		Kybd Data 2^1
9						18			9		Kybd Data 2^0
10						5			10		Data Rdy
11						11			11		Online/Local
12						2			12		Full/Half Duplex
13						10			13		Break
14						7			14		High Rate
15						9			15		Low Rate
16						6			16		Odd Parity
17	8		9			8			17		Even Parity
18	10		0			20			18		Gnd
19	9		2			22			23		+5V
20	10	24	0	8.0	AP1	21	3	DJ1	24	4	Gnd

AA3183 REV. 8 71

PRINTED IN U.S.A.

CONTROL DATA		CODE IDENT 15920	SHEET 4	WL	DOCUMENT NO. 61402300	REV. A

CONDUCTOR IDENT.	FIND NO.	GAUGE (REF.)	COLOR (REF.)	LENGTH (APPROX)	ORIGIN		ACCESS FIND NO.	DESTINATION		ACCESS FIND NO.	REMARKS
21	11	24	6	8.0	AP1	19	3	DJ1	25	4	-12V
22	12	20	5	3.0	DJ1	20	4	Conn Shell		13	Protective Ground
23	12	20	5	9.0	Conn Shell		—	Logic Chassis		5	Protective Ground

AA3183 REV. 8 71

PRINTED IN U.S.A.

BUILD ARC 104

ASSEMBLY PARTS LIST

PRINT DATE	PAGE	FILE CHANGE NO.
08-23-78	1	00013089

DIV.	ASSEMBLY NUMBER	CD	REV.	DWG.	DESCRIPTION	MC	STATUS	STATUS DATE	ENG. RESP.	FILE DATE
0860	61402300	"	C	A	CABLE ASSY KYBD INTERNAL	A	REL	12-31-75	CC5B1A-D	08-23-78

T	FIND NO	LI	PART NUMBER	CD	M	QUANTITY	U/M	PART DESCRIPTION	MC	YLD	ECO. NO. IN	ECO. NO. OUT	S/N	WK IN	WK OUT
	001	01	51652907	0		1	PC	CONN, PC EDGE 22 POS 3.588W	P						
	002	01	53397914	2		1	PC	CONN, FEM 25POSN PLUG ALONE	P						
	003	01	94219902	7		21	PC	CONTACT,FLAG 26-22AWG STRIP	P						
	004	01	53397917	5		22	PC	CONTACT, STRIP SKT 20-24GA	P						
	005	01	51797217	0		1	PC	LUG, CRMP R TERM #22-18GA 10S	B						
	006	02	94277400	1		3	PC	STRAP CABLE TIE TYPE 1	B		11547	13089		7621	7834
	006	03	94277400	1		2	PC	STRAP CABLE TIE TYPE 1	B		13089			7834	
	008	01	24548316	2		11 333	FT	WIR 24GA STRD WHT 300V UL PVC	W						
	009	01	24548303	7		666	FT	WIR 24GA STRD RED 300V UL PVC	W						
	010	01	24548301	1		1 333	FT	WIR 24GA STRD BLK 300V UL PVC	W						
	011	01	24548307	8		666	FT	WIR 24GA STRD BLU 300V UL PVC	W						
	012	01	93462555	9		1	FT	WIR 20GA STRD GRN 300V UL PVC	W						
	013	01	51797204	8		1	PC	LUG, CRMP R TERM #22-18GA 4SS	B						
								0013 TOTAL LINES							

DWN	R. Frantzen	10-13-75	CONTROL DATA	TITLE	PREFIX	DOCUMENT NO	REV
CHKD	[illegible]	[illegible]		CABLE ASSY DC POWER	A	61402400	C
ENG	[illegible]	10/24/75					
MFG	[illegible]	12-31-75		FIRST USED ON	NHA	SHEET	
APPR	E. H. Noe	12-31-75	CODE IDENT 15920	CC5B1A	15629200	1 of 3	

SHEET REVISION STATUS

3	2	1
01	01	01
A	A	A
B	B	B
B	C	C

REVISION RECORD

REV	ECO	DESCRIPTION	DRFT	DATE	APP
		RELEASED CLASS C		[illegible]	[illegible]
01	CS44	EQUIP. NO. WAS CC543A/B/C/D REVISED WIRE LENGTHS	[illegible]	11/26/75	[illegible]
A	10653-27	RELEASED CLASS A		12/31/75	M.C.T.
B	CD 11394	REV SHTS 1,2,3 & PL	MMS 3-30-76	[illegible] 3-30-76	[illegible]
C	CD11547	Revised per ECO	rt	[illegible]	

NOTES:

1. Bulk Identify with CDC Part Number.

APL 61402400

DETACHED LISTS

AA3185 REV. 8-71

PRINTED IN U.S.A.

CONTROL DATA	CODE IDENT	SHEET		DOCUMENT NO.	REV
	15920	2	A	61402400	C

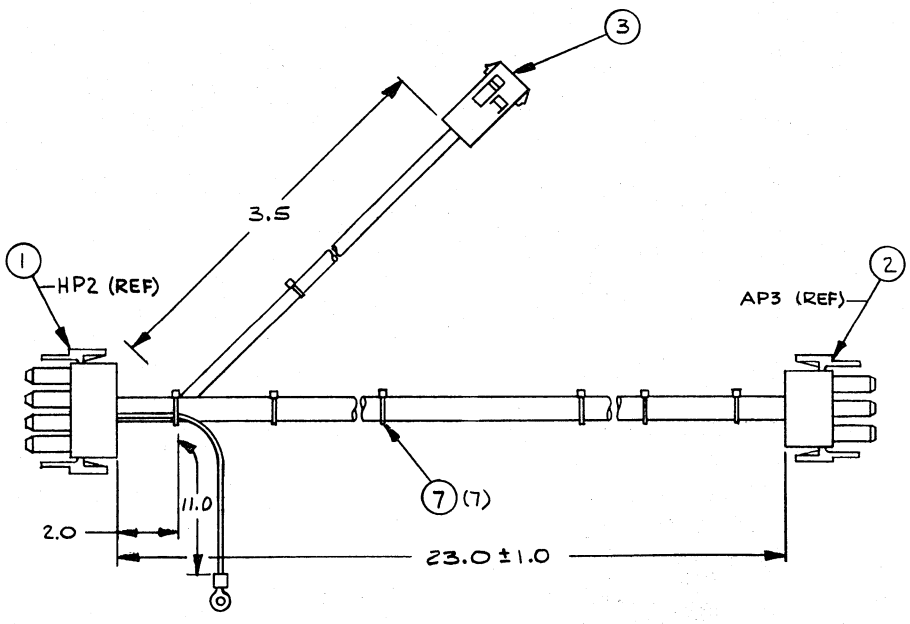

TOL .X ±0.5

AA3185

PRINTED IN U.S.A.

CONTROL DATA		CODE IDENT 15920	SHEET 3	WL	DOCUMENT NO 61402400	REV B

CONDUCTOR IDENT	FIND NO	GAUGE (REF)	COLOR (REF)	LENGTH (APPROX)	ORIGIN		ACCESS FIND NO	DESTINATION		ACCESS FIND NO	REMARKS
1	9	16	2	24.0	HP2	11	4	AP3	1	4	+5V
2	9	16	2	24.0	HP2	12	4	AP3	7	4	+5V
3	10	16	0	24.0	HP2	8	4	AP3	2	4	Ground
4	10	16	0	24.0	HP2	9	4	AP3	8	4	Ground
5	11	16	3	24.0	HP2	7	4	AP3	9	4	+12V
6	12	16	6	24.0	HP2	10	4	AP3	3	4	-12V
7	13	16	8	24.0	HP2	1	4	AP3	6	4	AC } TP
8	10	16	0	24.0	HP2	4	4	AP3	5	4	Ground } TP
9	9	16	2	6.0	HP2	3	4	BP2	1	5	+24V
10	10	16	0	6.0	HP2	5	4	BP2	2	5	Ground
11	10	16	0	13.0	HP2	6	4	CE3		8	Ground

AA3183 REV. 8 71 PRINTED IN U.S.A.

BUILD ARC 104

ASSEMBLY PARTS LIST

PRINT DATE	PAGE	FILE CHANGE NO.
05-10-76	1	00011567

DIV.	ASSEMBLY NUMBER	CD	REV.	DWG.	DESCRIPTION	MC	STATUS	STATUS DATE	ENG. RESP.	FILE DATE
0860	61402400	8	C	A	CABLE ASSY DC POWER	A	REL	12-31-75	CC5B1A-D	05-10-76

T	FIND NO	LI	PART NUMBER	CD	M	QUANTITY	U/M	PART DESCRIPTION	MC	YLD	ECO. NO. IN	ECO. NO. OUT	S/N	WK IN	WK OUT
	001	01	51906005	7		1	PC	CONN PLUG 12 PIN	P						
	002	01	51906004	0		1	PC	CONN PLUG 9 PIN	P						
	003	01	51905900	0		1	PC	CONN RECPT 2 CONTACTS	P						
	004	01	51906204	6		19	PC	CONTACT, SKT 20-14GA STRIP G	P						
	005	01	51905804	4		2	PC	CONT, PIN 20-14GA .13UINS STR	P						
	006	01	94277409	2		4	PC	STRAP CABLE TIE TYPE 6	P			11547			7621
	007	01	94277400	1		6	PC	STRAP CABLE TIE TYPE 1	P			11547			7621
	007	02	94277400	1		7	PC	STRAP CABLE TIE TYPE 1	P		11547			7621	
	008	01	51797236	0		1	PC	LUG, CRMP R TERM 16-14GA 10SS	B						
	009	01	93464222	4		4	500 FT	WIR 16GA STRD RED 300V UL PVC	W						
	010	01	93464000	4		7	250 FT	WIR 16GA STRD BLK 300V UL PVC	W			11394			7614
	010	02	93464000	4		7	833 FT	WIR 16GA STRD BLK 300V UL PVC	W		11394			7614	
	011	01	93464333	9		2	FT	WIR 16GA STRD ORN 300V UL PVC	W						
	012	01	93464666	4		2	FT	WIR 16GA STRD BLU 300V UL PVC	W						
	013	01	93464888	2		2	FT	WIR 16GA STRD GRY 300V UL PVC	W						
								0015 TOTAL LINES							

PART NO.	DIM. A	B (WIRE) F/N	B (WIRE) AWG	C (LUG) F/N	C (LUG) STUD SIZE	D (LUG) F/N	D (LUG) STUD SIZE
61391100	20.0±.5	1	18	2	3/8	3	#8/#10
01	2.5±.5	1	18	2	#8/#10	3	#6
02	21.0±.5	1	N/A	2	#10	3	#1/4
03	14.0±.5	1	18	2	#8/#10	2	#8/#10
04	4.5±.5	1	16	2	8,9,10	2	8,9,10
05	7.5±.5	1	16	2	8,9,10	2	8,9,10
06	9.5±.5	1	16	2	8,9,10	2	8,9,10
07	12.5±.5	1	16	2	8,9,10	2	8,9,10
08	5.0±.5	1	20	2	#6	3	SOCKET
09	4.0±.5	1	18	2	#6	2	#6
10	4.5±.5	1	16	2	8,9,10	2	#4

SHEET REVISION STATUS

REVISION RECORD

REV	ECO	DESCRIPTION	DRFT	DATE	CHKD	APP
		RELEASED CLASS C		3/11/75		[illegible]
01	C237	ADDED TABS 01 & 02	[illegible]	4-7-75	[illegible]	JS
02	C276	ADDED TAB 03	[illegible]	4-30-75	[illegible]	[illegible]
A	10653-7	RELEASED CLASS A	—	5-14-75	—	MCT
A	9401-14	ADD INT DIV LABEL	—	9/3/75	—	[illegible]
B	10935	ADD TABS 04 THRU 07	[illegible]	1-7-76	[illegible]	[illegible]
C	CD11189	TAB 00 DIM A WAS 24.0±.5	[illegible]	1/15/76	[illegible]	JS
D	CD11226	ADD TAB 08	[illegible]	3/5/76	[illegible]	[illegible]
E	CD11442	ADDED TAB 09	[illegible]	4/2/76	[illegible]	[illegible]
F	CD11761	P/L CHANGE ONLY	[illegible]	10/6/76	[illegible]	[illegible]
G	CD11821	ADDED TAB 10	[illegible]	11/16/76	[illegible]	[illegible]

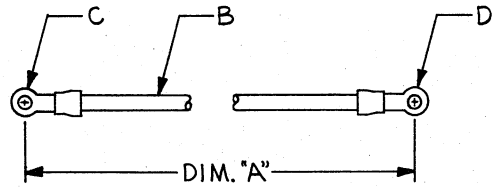

NOTES:

1. BULK IDENTIFY WITH CDC PART NUMBER AND REVISION LETTER.

61391100

INTER-DIVISIONAL DOCUMENT
This document is subject to change without prior notice. Users will receive copy only of the revised document.

APL 61391170 THRU APL 61391100

DETACHED LISTS

UNLESS OTHERWISE SPECIFIED DIMENSIONS ARE IN INCHES
TOLERANCES
3 PLACE ± / 2 PLACE ± / ANGLES ± /

DO NOT SCALE DRAWING

MATERIAL

FINISH

CONTROL DATA

FIRST USED ON	CC114A	
DWN	DAK	3-6-75
CHKD	[illegible]	3/19/75
ENGR	R.R. BARNICK	3/17/75
MFG	T. Freeman	5/9/75
APPR	[illegible]	5/9/75
	E. H. [illegible]	5-8-75

TITLE
GROUND WIRE ASSY

CODE IDENT 15920 | C | DRAWING NO 61391100 THRU 61391115

SCALE NONE | NHA 15618100 | SHEET / OF /

BUILD ARC 104

ASSEMBLY PARTS LIST

PRINT DATE	PAGE	FILE CHANGE NO.
11-08-76	1	00011821

DIV.	ASSEMBLY NUMBER	CD	REV.	DWG.	DESCRIPTION	MC	STATUS	STATUS DATE	ENG. RESP.	FILE DATE
0860	61391105	6	G	C	GND WIRE ASSY 7.5 16GA	A	REL	05-14-75	CC114A	11-08-76

T	FIND NO	LI	PART NUMBER	CD	M	QUANTITY	U/M	PART DESCRIPTION	MC	YLD	ECO. NO. IN	ECO. NO. OUT	S/N	WK IN	WK OUT
	001	01	93507555	6		625	FT	WIR 16GA STRD GRN 600V UL PVC	W			11761			7648
	001	02	52810015	9		625	FT	WIRE ELECT INSU 16GA GREEN	W		11761			7648	
	002	01	51797236	0		2	PC	LUG, CRMP R TERM 16-14GA 10SS	B						
								0003 TOTAL LINES							

BUILD ARC 104

ASSEMBLY PARTS LIST

PRINT DATE	PAGE	FILE CHANGE NO.
11-08-76	1	00011821

DIV.	ASSEMBLY NUMBER	CD	REV.	DWG.	DESCRIPTION	MC	STATUS	STATUS DATE	ENG. RESP.	FILE DATE
0860	61391106	4	G	C	GND WIRE ASSY 9.5 16GA	G	REL	05-14-75	CC114A	11-08-76

T	FIND NO	LI	PART NUMBER	CD	M	QUANTITY	U/M	PART DESCRIPTION	MC	YLD	ECO. NO. IN	ECO. NO. OUT	S/N	WK IN	WK OUT
	001	01	93507555	6		790	FT	WIR 16GA STRD GRN 600V UL PVC	W			11761			7648
	001	02	52810015	9		790	FT	WIRE ELECT INSU 16GA GREEN	W		11761			7648	
	002	01	51797236	0		2	PC	LUG, CRMP R TERM 16-14GA 10SS	B						
								0003 TOTAL LINES							

BUILD ARC 104

ASSEMBLY PARTS LIST

PRINT DATE	PAGE	FILE CHANGE NO.
11-08-76	1	00011821

DIV.	ASSEMBLY NUMBER	CD	REV.	DWG.	DESCRIPTION	MC	STATUS	STATUS DATE	ENG. RESP.	FILE DATE
0860	61391108	0	G	C	GND WIRE ASSY 5.0 20GA SOCKET	A	REL	05-14-75	CC114A	11-08-76

T	FIND NO	LI	PART NUMBER	CD	M	QUANTITY	U/M	PART DESCRIPTION	MC	YLD	ECO. NO. IN	ECO. NO. OUT	S/N	WK IN	WK OUT
	001	01	93462555	9		500	FT	WIR 20GA STRD GRN 300V UL PVC	W						
	002	01	51797200	6		1	PC	LUG, CRMP R TERM #22-18GA 6SS	B						
	003	01	51654700	7		1	PC	CONTACT RECPT ELEC 24-20 AWG	P						
								0003 TOTAL LINES							

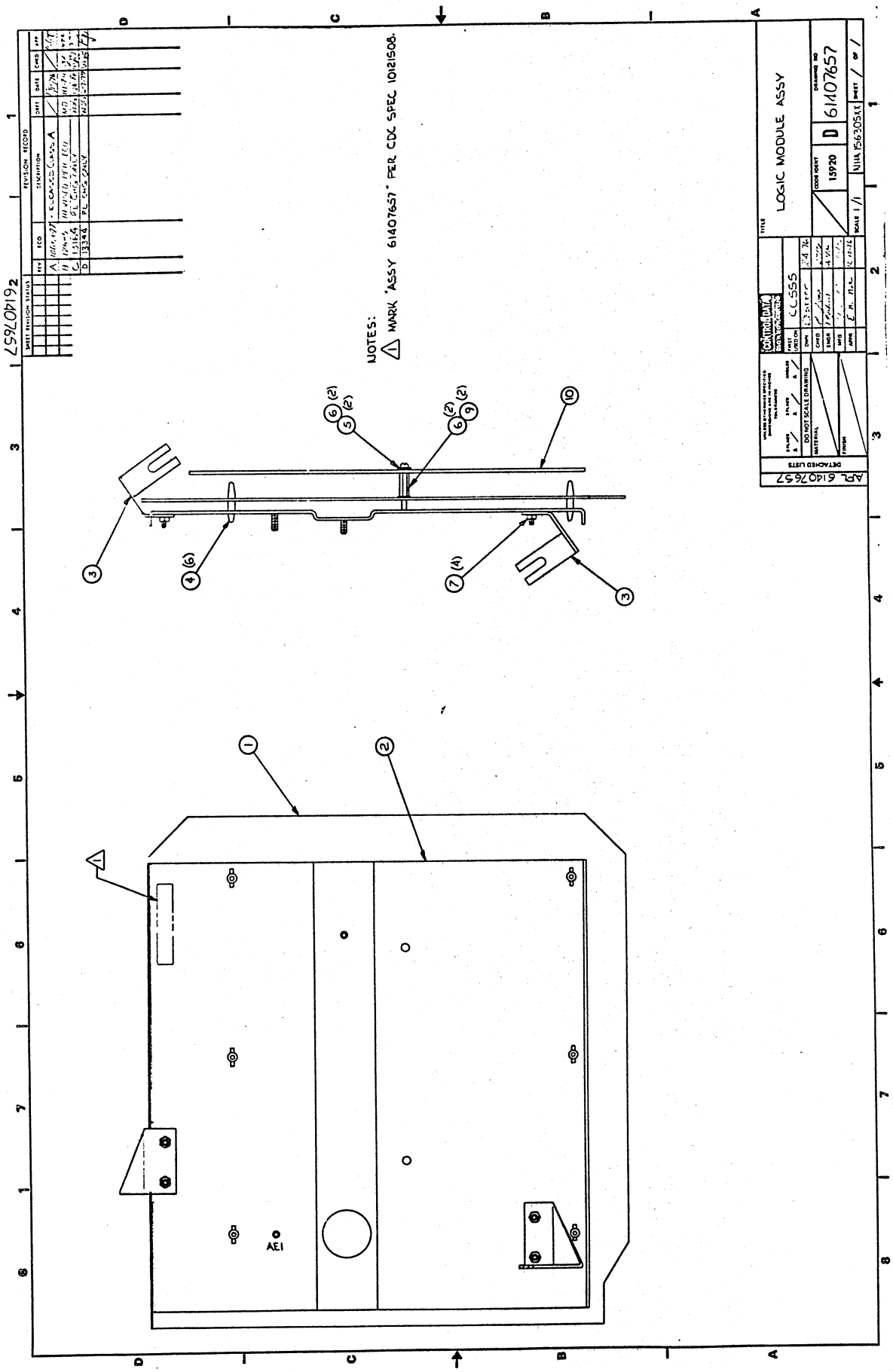
NOTES:
1 MARK 'ASSY 61407657' PER CDC SPEC 10121508.
LOGIC MODULE ASSY
61407657
15920
D
CC555
DO NOT SCALE DRAWING
APL 61407657
AE1

BUILD ARC 440

ASSEMBLY PARTS LIST

PRINT DATE 05-14-79 | PAGE 1 | FRS CHANGE NO. 00013344

DIV.	ASSEMBLY NUMBER	CD	REV.	DWG.	DESCRIPTION	ARC	STATUS	STATUS DATE	ENG. RESP.	FRS DATE
0860	61407657	8	D	D	LOGIC MODULE ASSY	N	REL	12-15-76		05-14-79

F	FIND NO	II	PART NUMBER	CD	M	QUANTITY	U/M	PART DESCRIPTION	ARC	VEN	ECO. NO. IN	ECO. NO. OUT	E/M	WKS IN	WKS OUT
	001	01	90460698	5		1	PC	REPLACED BY 90445991 13164	S			13164			7848
	001	02	90445991	4		1	PC	REPLACED BY 90446085 13344	S		13164	13344		7848	7936
	001	03	90446085	4		1	PC	CD ASSY 9ASD LOG MOD	S		13344			7936	
	002	01	71485900	6		1	PC	MOUNTING PLATE	P						
	003	01	71488500	1		2	PC	BRACKET MTG PLATE	P						
	004	01	51777300	8		6	PC	SPRT, CKT BD 3/16 NYL FIG 1	P						
	005	01	10127104	7		2	PC	MSCR PAN PHL 4-40X.375 STL ZP	B						
	006	01	10126400	0		4	PC	WSHR, NO.4 EXT/T LK STL ZP	B						
	007	01	10122901	1		4	PC	NUT, HEX 6-32 TWIN-LKG STL	B						
	009	01	51875304	1		2	PC	STDOFF, H-F HEX BRS 4-40X5/8	B						
	010	01	71491829	9		1	PC	SHIELD(PWB ASSY)	P						
								0011 TOTAL LINES							

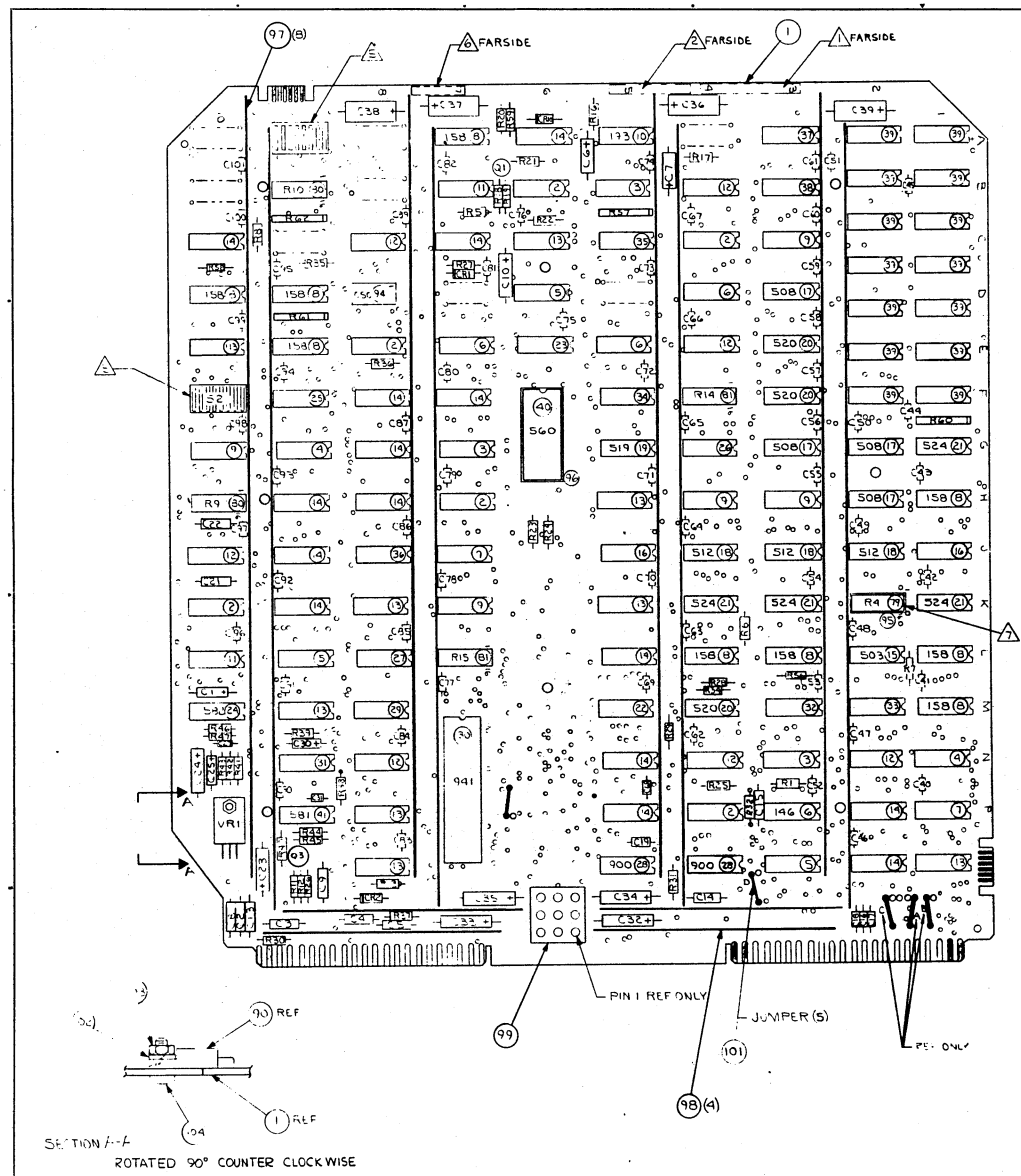

CROSS REFERENCE TABLE	
FIND NO.	REFERENCE DESIGNATION
45	Q1
46	Q3
49	C2,C3,C4,C5,C8,C14,C15 C21,C22
50	C24
51	C9,C13
52	C1,C6,C7,C23
53	C25
54	C10
55	C16,C17,C18,C19
56 △3	C31,C40,C41,C42,C43 C44,C45,C46,C47,C48,C49 THRU87,89 THRU101
57	C32,C33,C34,C35,C36,C37,C38,C39
58	C30
60	C27
66	R21
67	R27
68	R26,R30
69	R5,R6,R7,R8,R11,R12,R13,R25 R35,R36,R41,R45
70	R1,R37
71	R20
72	R18
73	R19,R22
74	R17
75	R31,R32
76	R23
77	R24
78	R16
79	R4 △7
80	R9,R10
81	R14,R15
82	R38
83	R39
84	R40
85	R42
86	R43
87	R44
88	R46,R47
89	CR1,CR2,CR10
90	VR1
91	S1,S2

109	R28,R29,R34,R56
110	R57,R60,R61
111	R59
112	R58
114	R62

CHANGE TABLE	
DELETIONS	ADDITIONS

SHEET REVISION STATUS

REVISION RECORD

REV	ECO	DESCRIPTION	DRFT	DATE	CHKD	APP
-	—	RELEASED CLASS "C"	NJN	12-1-76		
A	10653-77	RELEASED [illegible] A		[illegible]		
B	12170	P/L CHANGE ONLY	[illegible]	4-12-77	[illegible]	[illegible]
C	CD12756	REVISED PER ECO	[illegible]	2-17-78	[illegible]	[illegible]
D	CD12943	P/L CHG ONLY	WJG	6-29-78	[illegible]	[illegible]
E	13059	P/L CHG ONLY	WJH	10-5-78	[illegible]	[illegible]
F	13164	INACTIVE: SERVICE USE ONLY SUPERSEDED BY 90445991	WJG	1-24-79	[illegible]	[illegible]

NOTES:

1. APPLY ASSY NO., REV. LEVEL, AND LOC. CODE IN AREA SHOWN. MARK PER CDC SPEC 10121508. CHARACTER HEIGHT .12 (12PT) COLOR WHITE.
2. MARK SERIAL NO. IN AREA SHOWN PER CDC STD 1.01 025 AND CDC SPEC 10121508. .12 HEIGHT, COLOR WHITE.
3. CAPACITOR C88 NOT USED.
4. FIND NUMBERS, ELEMENT IDENTIFIERS, AND REFERENCE DESIGNATIONS ARE FOR REFERENCE ONLY AND DO NOT APPEAR ON PART.
5. SWITCH CONTACTS ARE CLOSED WHEN TOGGLE TOWARD TOP OF BOARD IS DEPRESSED.
6. APPLY 6CUD-0 IN AREA SHOWN. MARK PER CDC SPEC 10121508, CHARACTER HEIGHT .12 (12PT) COLOR WHITE.
7. TEST SOCKET (FIND NO. 95) AND RESISTOR PACK (FIND NO. 79) LOCATED AT K2 NOT USED ON PC BLANK 90460763.

INACTIVE

APL 90460698

DETACHED LISTS

UNLESS OTHERWISE SPECIFIED DIMENSIONS ARE IN INCHES TOLERANCES
3 PLACE ± — 2 PLACE ± — ANGLES ± —
DO NOT SCALE DRAWING
MATERIAL
FINISH

CONTROL DATA

FIRST USED ON	CC555-A	
DWN	WJ HERMAN	12-1-76
CHKD	[illegible]	
ENGR	[illegible]	
MFG	[illegible]	
APPR	[illegible]	
MECH	[illegible]	12-10-76

TITLE: P.C. CARD ASSY, 6CUD-0 (LOGIC MODULE)

CODE IDENT 15920 | D | DRAWING NO 90460698

SCALE NONE | SHEET 1 OF 1

BUILD ARC 214

ASSEMBLY PARTS LIST

PRINT DATE	PAGE	FILE CHANGE NO.
11-27-78	1	00013164

DIV.	ASSEMBLY NUMBER	CD	REV.	DWG.	DESCRIPTION	MC	STATUS	STATUS DATE	ENG. RESP	FILE DATE
0860	90460698 5		F	D	REPLACED BY 90445991 13164	S	INA	11-09-78	CC555	11-27-78

T	FIND NO	LI	PART NUMBER	CD	M	QUANTITY	U/M	PART DESCRIPTION	MC	YLD	ECO. NO. IN	ECO. NO. OUT	S/N	WK IN	WK OUT
	001	01	90460533 4			1	PC	PC BD 6AGD-0 REFRESH BD	P			12756			7818
	001	02	90460763 7			1	PC	PW BD MULTI USE	P		12756			7818	
	002	01	88924400 0			6	PC	IC TYPE 7400 TTL QUAD 2-I/P	P			12170			7740
	002	02	66299099 3			6	PC	IC TTL QUAD 2-IN NAND	P		12170			7740	
	003	01	88898200 6			3	PC	IC TYPE 7410 TTL 3I/P POS	P			12170			7740
	003	02	66299100 9			3	PC	IC TTL3 3I/P NAND PLASTIC	P		12170			7740	
	004	01	66299102 5			2	PC	IC TTL DUAL 4-IN NAND	P						
	005	01	88885500 4			3	PC	IC TYPE 7402 TTL QUAD NOR GA	P			12170			7740
	005	02	66299103 3			3	PC	IC TTL QUAD 2-IN NOR	P		12170			7740	
	006	01	88924500 7			4	PC	IC TYPE 7404 TTL HEX INVERTER	P			12170			7740
	006	02	39389700 4			4	PC	IC 7404 TTL QUAD 2 1/P	P		12170			7740	
	007	01	88885700 0			1	PC	IC TYPE 7486TTL QUAD 2 I/P	P						
	008	01	51761500 1			9	PC	IC 74161/9316 158 TTL CNTR 6	P						
	009	01	88886400 6			6	PC	IC TYPE 74157 TTL QUAD 2I/P	P						
	010	01	50254300 2			1	PC	IC 74123 193 TTL 2 RETGR MVB	P						
	011	01	96744155 1			2	PC	IC 7406 DRVR HEX INV BUFFER	P						
	012	01	88897000 1			7	PC	IC TYPE 7408 TTL QUAD 2I/P	P						
	013	01	96744172 6			8	PC	IC 7432 218 TTL QUAD 2IN OR	P						
	014	01	88885400 7			15	PC	IC TYPE 9024 TTL DUAL FLIP FO	P						
	015	01	95814600 3			1	PC	IC 74160/9310 503 TTL UP DEC	P						
	016	01	66299110 8			2	PC	IC TTL 1 OF 10 DECODER	P						
	017	01	66299117 6			4	PC	IC TTL DUAL 4 TO 1 MUX	P						
	018	01	52342700 3			3	PC	IC 74191/9336 512 TTL 4B BIN	P						

BUILD ARC 214

ASSEMBLY PARTS LIST

PRINT DATE	PAGE	FILE CHANGE NO.
11-27-78	2	00013164

DIV.	ASSEMBLY NUMBER	CD	REV.	DWG.	DESCRIPTION	MC	STATUS	STATUS DATE	ENG. RESP	FILE DATE
0860	90460698 5		F	D	REPLACED BY 90445991 13164	S	INA	11-09-78	CC555	11-27-78

T	FIND NO	LI	PART NUMBER	CD	M	QUANTITY	U/M	PART DESCRIPTION	MC	YLD	ECO. NO. IN	ECO. NO. OUT	S/N	WK IN	WK OUT
	019	02	88882800 1			1	PC	IC 74174 519 TTL 6BIT D LATCH	P		12200-13			7727	
	020	01	15104500 2			3	PC	IC 74175 520 TTL 4 BIT D LTCH	P						
	021	01	15108600 6			4	PC	IC 7485 524 TTL 4B MGNTD CPTR	P						
	022	01	88923600 6			1	PC	IC TYPE 74164 TTL 8BIT	P						
	023	01	88923700 4			1	PC	IC TYPE 74165 TTL 8BIT	P						
	024	01	15105700 7			1	PC	IC 4024 582 TTL DL/V CONT MVB	P						
	025	01	51861706 3			1	PC	IC 256BIT 32X8 BP-ROM ASSY	G						
	026	01	51861711 3			1	PC	IC 256BIT 32X8 BP-ROM ASSY	V						
	027	01	51861709 7			1	PC	IC 256BIT 32X8 BP-ROM ASSY	V						
	028	01	36186400 2			2	PC	IC MC1488 900 DTL QD LN DRVR	P						
	029	02	36186500 9			1	PC	IC MC1489 901 DTL QD LN RCVR	P		12170			7725	
	030	01	15125700 3			1	PC	IC TR1602A 941 MOS ASYN XCVR	P						
	031	01	88896100 0			1	PC	IC 7414 RCVR TTL HEX NAND	P						
	032	01	51892308 1			1	PC	IC 1024BIT 256X4 BP-ROM ASSY	V						
	033	01	51892309 9			1	PC	IC 1024BIT 256X4 BP-ROM ASSY	V						
	034	01	51892310 7			1	PC	IC 1024BIT 256X4 BP-ROM ASSY	V						
	035	01	51892311 5			1	PC	IC 1024BIT 256X4 BP-ROM ASSY	V						
	036	01	51892315 6			1	PC	IC 1024BIT 256X4 BP-ROM ASSY	V						
	037	01	51892313 1			1	PC	IC 1024BIT 256X4 BP-ROM ASSY	V						
	038	01	51892314 9			1	PC	IC 1024BIT 256X4 BP-ROM ASSY	V						
	039	01	15140300 3			14	PC	IC 2102A-4 772A MOS 1024B RAM	P						

BUILD ARC 214

ASSEMBLY PARTS LIST

PRINT DATE 11-27-78 | PAGE 3 | FILE CHANGE NO. 00013164

DIV.	ASSEMBLY NUMBER	CD	REV.	DWG.	DESCRIPTION	MC	STATUS	STATUS DATE	ENG. RESP.	FILE DATE
0860	90460698	5	F	D	REPLACED BY 90445991 13164	S	INA	11-09-78	CC555	11-27-78

T	FIND NO	LI	PART NUMBER	CD	M	QUANTITY	U/M	PART DESCRIPTION	MC	YLD	ECO. NO. IN	ECO. NO. OUT	S/N	WK IN	WK OUT
	040	01	15144500	4		1	PC	IC SCM3750L 560 MOS 81928 ROM	P						
	041	01	15105600	9		1	PC	IC 4044 581 TTL PH/FREQ DETR	P						
	045	01	51003059	6		1	PC	XSTR DD1 106 EPITAX NPN SIL	P						
	046	01	51887100	9		1	PC	XSTR TO-18 LOW LVL NPN SIL	P						
	049	01	51839147	9		9	PC	CAP FXD CER .1UF 10P 100VDCW	P						
	050	01	24504369	0		1	PC	CAP FXD TANT 10UF 20P 15VDCW	P						
	051	01	51839142	0		2	PC	CAP FXD CER .033UF 100V 10P	P						
	052	01	51879105	8		4	PC	CAP FXD TANT 100UF 10P 6VDCW	P						
	053	01	24504317	9		1	PC	CAP FXD TANT .1UF 20P 35VDCW	P						
	054	01	24504322	9		1	PC	CAP FXD TANT 47UF 20P 6VDCW	P						
	055	01	51839119	8		4	PC	CAP FXD CER 390PF 10P 100VDCW	P						
	056	01	51001119	0		62	PC	CAP CER BY PASS .01MFD 25WVDC	P			12943			7831
	056	02	51001120	8		92	PC	CAP CER .01UF 25VDCW	P		12943			7831	
	057	01	51786437	7		8	PC	CAP SOLID TANT 33UF 20P 15V	P						
	058	01	24504312	0		1	PC	CAP FXD TANT 6.8UF 20P 6WVDC	P			13059			7840
	058	02	24504325	2		1	PC	CAP FXD TANT .47UF 20P 35VDCW	P		13059			7840	
	060	01	94227216	2		1	PC	CAP DIP MICA 39PF 1PF 300VDCW	P						
	066	01	24500055	9		1	PC	RES FXD COMP 470 OHM 5P 1/4W	P						
	067	01	24500087	2		1	PC	RES FXD COMP 10K OHM 5P 1/4W	P						
	068	01	24500039	3		2	PC	RES FXD COMP 100 OHM 5P 1/4W	P						
	069	01	24500063	3		12	PC	RES FXD COMP 1000 OHM 5P 1/4W	P						
	070	01	24500079	9		2	PC	RES FXD COMP 4700 OHM 5P 1/4W	P						

BUILD ARC 214

ASSEMBLY PARTS LIST

PRINT DATE 11-27-78 | PAGE 4 | FILE CHANGE NO. 00013164

DIV.	ASSEMBLY NUMBER	CD	REV.	DWG.	DESCRIPTION	MC	STATUS	STATUS DATE	ENG. RESP.	FILE DATE
0860	90460698	5	F	D	REPLACED BY 90445991 13164	S	INA	11-09-78	CC555	11-27-78

T	FIND NO	LI	PART NUMBER	CD	M	QUANTITY	U/M	PART DESCRIPTION	MC	YLD	ECO. NO. IN	ECO. NO. OUT	S/N	WK IN	WK OUT
	071	01	24500027	8		1	PC	RES FXD COMP 33 OHM 5P 1/4W	P						
	072	01	24500036	9		1	PC	RES FXD COMP 75 OHM 5P 1/4W	P						
	073	01	24500048	4		2	PC	RES FXD COMP 240 OHM 5P 1/4W	P						
	074	01	24500081	5		1	PC	RES FXD COMP 5600 OHM 5P 1/4W	P						
	075	01	24500073	2		2	PC	RES FXD COMP 2700 OHM 5P 1/4W	P						
	076	01	17705903	7		1	PC	RES FXD COMP 43K OHM 5P 1/4W	P						
	077	01	24500098	9		1	PC	RES FXD COMP 30K OHM 5P 1/4W	P						
	078	01	24500084	9		1	PC	RES FXD COMP 7500 OHM 5P 1/4W	P						
	079	01	62012900	7		1	PC	RES MOD DUAL 56 OHMS 125MW	P			12756			7818
	080	01	62012906	4		2	PC	RES MOD DUAL 1K OHMS 125MW	P						
	081	01	62012920	5		2	PC	RES MOD DUAL 4.7K OHM 125MW	P						
	082	01	24500056	7		1	PC	RES FXD COMP 510 OHM 5P 1/4W	P						
	083	01	24500077	3		1	PC	RES FXD COMP 3900 OHM 5P 1/4W	P						
	084	01	17705908	6		1	PC	RES FXD COMP 68K OHM 5P 1/4W	P						
	085	01	24500071	6		1	PC	RES FXD COMP 2200 OHM 5P 1/4W	P						
	086	01	24500047	6		1	PC	RES FXD COMP 220 OHM 5P 1/4W	P						
	087	01	24500074	0		1	PC	RES FXD COMP 3000 OHM 5P 1/4W	P						
	088	01	94360292	0		2	PC	RES FXD FILM 9090HMS 1/4W 1P	P						
	089	01	51001239	6		3	PC	REPLACED BY 51007385 12937	P			12937			7840
	089	02	51007385	1		3	PC	DIO MICRO SIL 30V 10MA	P		12937			7840	
	090	01	15151500	4		1	PC	IC UA7800+5 357A POS V RGLTR	P						

BUILD ARC 214

ASSEMBLY PARTS LIST

PRINT DATE	PAGE	FILE CHANGE NO.
11-27-78	5	00013164

DIV.	ASSEMBLY NUMBER	CD	REV.	DWG.	DESCRIPTION	MC	STATUS	STATUS DATE	ENG. RESP.	FILE DATE
0860	90460698	5	F	D	REPLACED BY 90445991 13164	S	INA	11-09-78	CC555	11-27-78

T	FIND NO	LI	PART NUMBER	CD	M	QUANTITY		U/M	PART DESCRIPTION	MC	YLD	ECO. NO. IN	ECO. NO. OUT	S/N	WK IN	WK OUT
	091	01	51862504	1		2		PC	SW, PC BD TGL 8 IN-LINE SPST	P						
	094	01	51904105	7		1		PC	OSC, TTL DIP 6.745MHZ 500MW	P						
	095	01	51848401	9		1		PC	SOCKET, IC 16 POS DL-IN-LINE	P			12756			7818
	096	01	51848404	3		1		PC	SOCKET, IC 24 POS DL-IN-LINE	P						
	097	01	71486102	8		8		PC	BUS, PWR 11.35LG W/POSTS CU	P						
	098	01	71486101	0		4		PC	BUS, PWR 3.6LG W/POSTS CU	P						
	099	01	51906111	3		1		PC	CONN, 9 PIN PC MTD GOLD FIG 3	P						
	101	01	95642805	6			500	FT	WIR SLD 24GA TINNED	W						
	102	01	10125801	0		1		PC	WSHR, SPG LOCK NO.4 STL C/ZP	B						
	103	01	10125103	1		1		PC	NUT, HEX MSCR 4-40 STL CP/ZP	B						
	104	01	92780084	7		1		PC	SCR PAN HD SLT 4-40X5/16	B						
	105	01	16006500	9		REF		PC	FABRICATION SPECIFICATION	D						
	106	01	10121508	5		REF		PC	MARKING METHODS (SILK-SC,ETC)	D						
	107	01	16019500	4		REF		PC	REQ/INSTALLATION OF EXT CKTS	D						
	108	01	90460532	6		REF		PC	SCH DIAG 6ABD-0 MET LOG BASIC	D						
	109	01	24500075	7		4		PC	RES FXD COMP 3300 OHM 5P 1/4W	P						
	110	02	94375102	4		3		PC	RES 8PIN NTWK 3.3K 3P 1/8W	P						
	111	01	24500061	7		1		PC	RES FXD COMP 820 OHM 5P 1/4W	P						
	112	01	24500059	1		1		PC	RES FXD COMP 680 OHM 5P 1/4W	P						
	113	01	51892316	4		1		PC	IC 1024BIT 256X4 BP-ROM ASSY	V						
	114	01	94375109	9		1		PC	RES MOD 1K OHMS 125MW	P						

BUILD ARC 214

ASSEMBLY PARTS LIST

PRINT DATE	PAGE	FILE CHANGE NO.
11-27-78	6	00013164

DIV.	ASSEMBLY NUMBER	CD	REV.	DWG.	DESCRIPTION	MC	STATUS	STATUS DATE	ENG. RESP.	FILE DATE
0860	90460698	5	F	D	REPLACED BY 90445991 13164	S	INA	11-09-78	CC555	11-27-78

T	FIND NO	LI	PART NUMBER	CD	M	QUANTITY		U/M	PART DESCRIPTION	MC	YLD	ECO. NO. IN	ECO. NO. OUT	S/N	WK IN	WK OUT
	115	01	52629949	0		1	500	FT	WIR WW 30GA SLD WHT UL KYNAR	W						
									0109 TOTAL LINES							

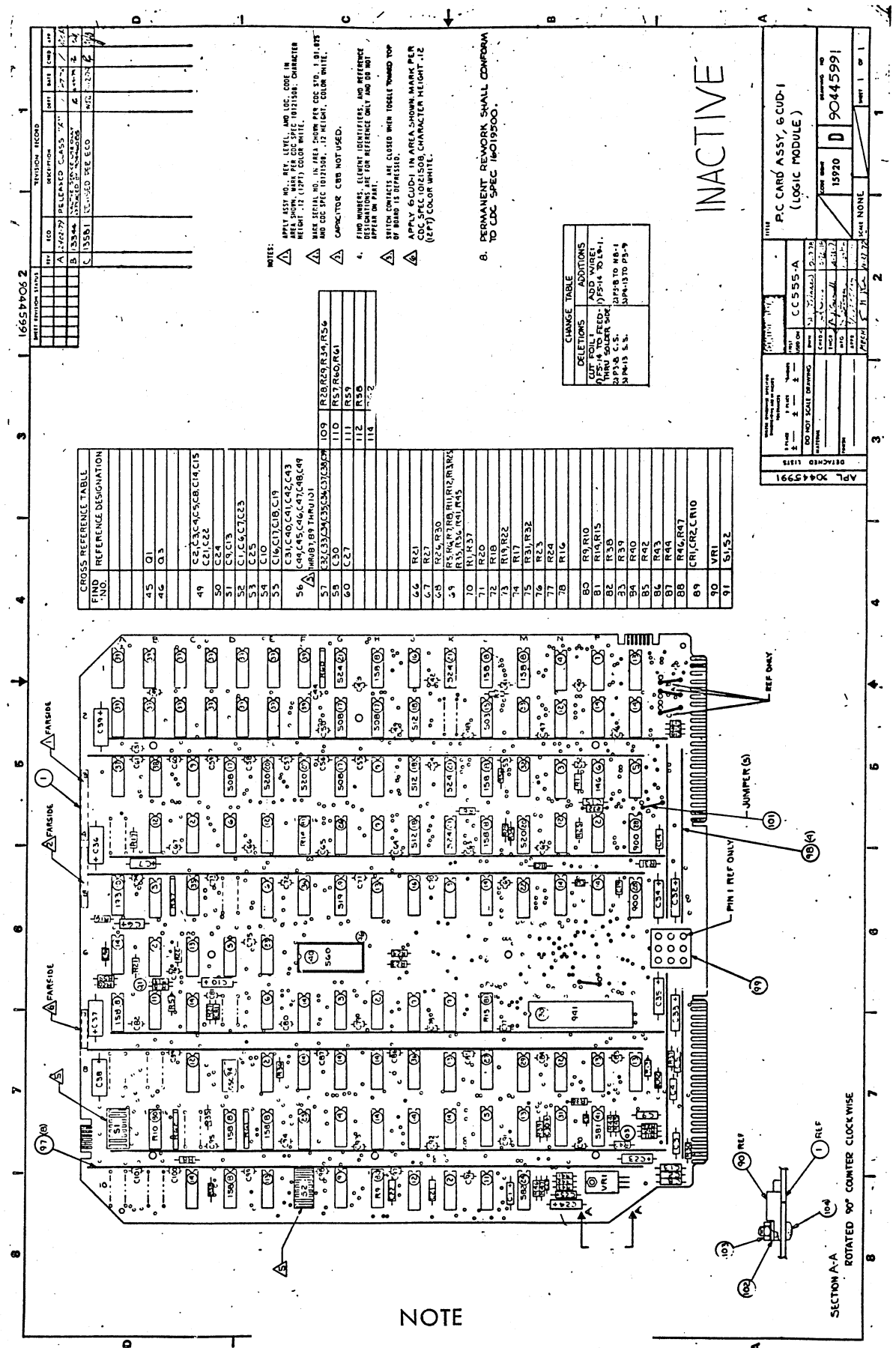

NOTE

6CUD-1 REPLACED BY 9ASD CARD,
PART NUMBER 90446085

BUILD ARC 214

ASSEMBLY PARTS LIST

PRINT DATE 07-03-79 | PAGE 1 | FRE CHANGE NO 00013581

DIV	ASSEMBLY NUMBER	CD	REV	DWG	DESCRIPTION	MC	STATUS	STATUS DATE	ENG RESP	FRE DATE
0860	90445991	4	C	D	REPLACED BY 90446085 13344	S	INA	05-04-79		07-03-79

T	FIND NO	LI	PART NUMBER	CD	M	QUANTITY	U/M	PART DESCRIPTION	MC	YLD	ECO NO IN	ECO NO OUT	S/N	WK IN	WK OUT
	001	01	90460763	7		1	PC	REPLACED BY 90446100 13403	P						
	002	01	66299099	3		6	PC	IC 7400 TTL QUAD 2-IN NAND	P						
	003	01	66299100	9		3	PC	IC 7410 14I TTL3 3I/P NAND	P						
	004	01	66299102	5		2	PC	IC TTL DUAL 4-IN NAND	P						
	005	01	66299103	3		3	PC	IC 7402 148 TTL QUAD 2-IN NOR	P						
	006	01	39389700	4		4	PC	IC 7404 146-TTL HEX INVTR	P						
	007	01	88885700	0		1	PC	IC TYPE 7486TTL QUAD 2 I/P	P						
	008	01	51761500	1		9	PC	IC 74161/9316 158 TTL CNTR 6	P						
	009	01	88886400	6		6	PC	IC TYPE 74157 TTL QUAD 2I/P	P						
	010	01	50254300	2		1	PC	IC 74123 193 TTL 2 RETGR MVB	P						
	011	01	96744155	1		2	PC	IC 7406 DRVR HEX INV BUFFER	P						
	012	01	88897000	1		7	PC	IC 7408 201 TTL QUAD 2-IN AND	P						
	013	01	96744172	6		8	PC	IC 7432 218 TTL QUAD 2IN OR	P						
	014	01	88885400	7		15	PC	IC TYPE 9024 TTL DUAL FLIP FO	P						
	015	01	95814600	3		1	PC	IC 74160/9310 503 TTL UP DEC	P						
	016	01	66299110	8		2	PC	IC TTL 1 OF 10 DECODER	P						
	017	01	66299111	6		4	PC	IC TTL DUAL 4 TO 1 MUX	P						
	018	01	52342700	3		3	PC	IC 74191/9336 512 TTL 4B BIN	P						
	019	01	88882800	1		1	PC	IC 74174 519 TTL 6BIT D LATCH	P						
	020	01	15104500	2		3	PC	IC 74175 520 TTL 4 BIT D LTCH	P						
	021	01	15108600	6		4	PC	IC 7485 524 TTL 4B MGNTD CPTR	P						

BUILD ARC 214

ASSEMBLY PARTS LIST

PRINT DATE 07-03-79 | PAGE 2 | FRE CHANGE NO 00013581

DIV	ASSEMBLY NUMBER	CD	REV	DWG	DESCRIPTION	MC	STATUS	STATUS DATE	ENG RESP	FRE DATE
0860	90445991	4	C	D	REPLACED BY 90446085 13344	S	INA	05-04-79		07-03-79

T	FIND NO	LI	PART NUMBER	CD	M	QUANTITY	U/M	PART DESCRIPTION	MC	YLD	ECO NO IN	ECO NO OUT	S/N	WK IN	WK OUT
	022	01	88923600	6		1	PC	IC TYPE 74164 TTL 8BIT	P						
	023	01	88923700	4		1	PC	IC TYPE 74165 TTL 8BIT	P						
	024	01	15105700	7		1	PC	IC 4024 582 TTL DL/V CONT MVB	P						
	025	01	51A61709	3		1	PC	IC 256BIT 32X8 BP-ROM ASSY	G						
	026	01	51861711	3		1	PC	IC 256BIT 32X8 BP-ROM ASSY	V						
	027	01	51861709	7		1	PC	IC 256BIT 32X8 BP-ROM ASSY	V						
	028	01	36186400	2		2	PC	IC MC1488 900 DTL QD LN DRVR	P						
	029	01	36186500	9		1	PC	IC MC1489 901 DTL QD LN RCVR	P						
	030	01	15125700	3		1	PC	IC TR1602A 941 MOS ASYN XCVR	P						
	031	01	88896100	0		1	PC	IC 7414 843 TTL HEX NAND RCVR	P						
	032	01	51892308	1		1	PC	IC 1024BIT 256X4 BP-ROM ASSY	V						
	033	01	51892309	9		1	PC	IC 1024BIT 256X4 BP-ROM ASSY	V						
	034	01	51892310	7		1	PC	IC 1024BIT 256X4 BP-ROM ASSY	V						
	035	01	51892311	5		1	PC	IC 1024BIT 256X4 BP-ROM ASSY	V						
	036	01	51892315	6		1	PC	IC 1024BIT 256X4 BP-ROM ASSY	V						
	037	01	51892313	1		1	PC	IC 1024BIT 256X4 BP-ROM ASSY	V						
	038	01	51892314	9		1	PC	IC 1024BIT 256X4 BP-ROM ASSY	V						
	039	01	15140300	3		14	PC	IC 2102A-4 772A MOS 1024B RAM	P						
	040	01	15144500	4		1	PC	IC SCM3750L 560 MOS 8192R ROM	P						
	041	01	15105600	9		1	PC	IC 4044 581 TTL PH/FREQ DETR	P						
	045	01	51003059	6		1	PC	XSTR DD1 108 EPITAX NPN SIL	P						

BUILD ARC 214

ASSEMBLY PARTS LIST

PRINT DATE 07-03-79 | PAGE 3 | FSE CHANGE NO. 00013581

DIV.	ASSEMBLY NUMBER	CD	REV.	DWG.	DESCRIPTION	MC	STATUS	STATUS DATE	ENG. RESP.	FSE DATE
0860	90445991	4	C	D	REPLACED BY 90446085 13344	S	INA	05-04-79		07-03-79

T	FIND NO	LI	PART NUMBER	CD	M	QUANTITY	U/M	PART DESCRIPTION	MC	YLD	ECO. NO. IN	ECO. NO. OUT	S/N	WK IN	WK OUT
	046	01	51887100	9		1	PC	XSTR TO-18 LOW LVL NPN SIL	P						
	047	01	51839147	9		9	PC	CAP FXD CER .100UF 10P 100VDC	P						
	050	01	24504369	0		1	PC	CAP FXD TANT 10UF 20P 15VDCW	P						
	051	01	51839142	0		2	PC	CAP FXD CER .033UF 10P 100VDC	P						
	052	01	51879105	8		4	PC	CAP FXD TANT 100UF 10P 6VDCW	P						
	053	01	24504317	9		1	PC	CAP FXD TANT .1UF 20P 35VDCW	P						
	054	01	24504322	9		1	PC	CAP FXD TANT 47UF 20P 6VDCW	P						
	055	01	51839119	8		4	PC	CAP FXD CER 390PF 10P 100VDC	P						
	056	01	51001120	8		62	PC	CAP CER F-Z .01UF +80-20P 25V	P						
	057	01	51786437	7		8	PC	CAP SOLID TANT 33UF 20P 15V	P						
	058	01	24504325	2		1	PC	CAP FXD TANT .47UF 20P 35VDCW	P						
	060	01	94227216	2		1	PC	CAP DIP MICA 39PF 1PF 300VDCW	P						
	066	01	24500055	9		1	PC	RES FXD COMP 470 OHM 5P 1/4W	P						
	067	01	24500087	2		1	PC	RES FXD COMP 10K OHM 5P 1/4W	P						
	068	01	24500039	3		2	PC	RES FXD COMP 100 OHM 5P 1/4W	P						
	069	01	24500063	3		12	PC	RES FXD COMP 1000 OHM 5P 1/4W	P						
	070	01	24500079	9		2	PC	RES FXD COMP 4700 OHM 5P 1/4W	P						
	071	01	24500027	8		1	PC	RES FXD COMP 33 OHM 5P 1/4W	P						
	072	01	24500036	9		1	PC	RES FXD COMP 75 OHM 5P 1/4W	P						
	073	01	24500048	4		2	PC	RES FXD COMP 240 OHM 5P 1/4W	P						
	074	01	24500081	5		1	PC	RES FXD COMP 5600 OHM 5P 1/4W	P						

BUILD ARC 214

ASSEMBLY PARTS LIST

PRINT DATE 07-03-79 | PAGE 4 | FSE CHANGE NO. 00013581

DIV	ASSEMBLY NUMBER	CD	REV.	DWG.	DESCRIPTION	MC	STATUS	STATUS DATE	ENG. RESP.	FSE DATE
0860	90445991	4	C	D	REPLACED BY 90446085 13344	S	INA	05-04-79		07-03-79

T	FIND NO	LI	PART NUMBER	CD	M	QUANTITY	U/M	PART DESCRIPTION	MC	YLD	ECO. NO. IN	ECO. NO. OUT	S/N	WK IN	WK OUT
	075	01	24500073	2		2	PC	RES FXD COMP 2700 OHM 5P 1/4W	P						
	076	01	11705903	7		1	PC	RES FXD COMP 43K OHM 5P 1/4W	P						
	077	01	24500098	9		1	PC	RES FXD COMP 30K OHM 5P 1/4W	P						
	078	01	24500084	9		1	PC	RES FXD COMP 7500 OHM 5P 1/4W	P						
	080	01	62012906	4		2	PC	RES MOD DUAL 1K OHMS 125MW	P						
	081	01	62012920	5		2	PC	RES MOD DUAL 4.7K OHM 125MW	P						
	082	01	24500056	7		1	PC	RES FXD COMP 510 OHM 5P 1/4W	P						
	083	01	24500077	3		1	PC	RES FXD COMP 3900 OHM 5P 1/4W	P						
	084	01	11705908	6		1	PC	RES FXD COMP 68K OHM 5P 1/4W	P						
	085	01	24500071	6		1	PC	RES FXD COMP 2200 OHM 5P 1/4W	P						
	086	01	24500047	6		1	PC	RES FXD COMP 220 OHM 5P 1/4W	P						
	087	01	24500074	0		1	PC	RES FXD COMP 3000 OHM 5P 1/4W	P						
	088	01	94360292	0		2	PC	RES FXD FM 909 OHM 1P 1/4W	P						
	089	01	51007385	1		3	PC	DIO IN4148 10MA MICRO SIL 30V	P						
	090	01	15151500	4		1	PC	IC UA7800+5 35TA POS V REGLTR	P						
	091	01	51862504	1		2	PC	SW, PC BD TGL 8 IN-LINE SPST	P						
	094	01	51904105	7		1	PC	OSC, TTL DIP 6.745MHZ 500MW	P						
	096	01	51848404	3		1	PC	SOCKET, IC 24 POS D-I-L TIN	P						
	097	01	71486102	8		8	PC	BUS, PWR 11.35LG W/POSTS CU	P						
	098	01	71486101	0		4	PC	BUS, PWR 3.6LG W/POSTS CU	P						
	099	01	51906111	3		1	PC	CONN, 9 PIN PC MTD GOLD FIG 3	P						

BUILD ARC 214

ASSEMBLY PARTS LIST

PRINT DATE 07-03-79 | PAGE 5 | FSE CHANGE NO 00013581

DIV	ASSEMBLY NUMBER	CD	REV	DWG	DESCRIPTION	MC	STATUS	STATUS DATE	ENG RESP	FSE DATE
0860	90445991	4	C	D	REPLACED BY 90446085 13344	S	INA	05-04-79		07-03-79

FIND NO	LI	PART NUMBER	CD	M	QUANTITY	U/M	PART DESCRIPTION	MC	TLD	ECO NO IN	ECO NO OUT	S/N	WE IN	WE OUT
101	01	95642805	6		500	FT	WIR SLD 24GA TINNED	W						
102	01	10125801	0		1	PC	WSHR, NO.4 SPG LOCK STL ZP	B						
103	01	10125103	1		1	PC	NUT, HEX 4-40 MSCR STL ZP	B						
104	01	92780084	7		1	PC	MSCR PAN SLT 4-40X5/16 SST P	B						
105	01	15006500	9		REF	PC	FABRICATION SPECIFICATION	D						
106	01	10121508	5		REF	PC	MARKING, INK STP-STENCIL-S/C	D						
107	01	16019500	4		REF	PC	REQ/INSTALLATION OF EXT CKTS	D						
108	01	62201031	2		REF	PC	LOGIC DIAG	D						
109	01	24500075	7		4	PC	RES FXD COMP 3300 OHM 5P 1/4W	P						
110	01	94375102	4		3	PC	RES SSIP NTWK 3300 R 3P 1.0W	P						
111	01	24500061	7		1	PC	RES FXD COMP 820 OHM 5P 1/4W	P						
112	01	24500059	1		1	PC	RES FXD COMP 680 OHM 5P 1/4W	P						
113	01	51892316	4		1	PC	IC 1024BIT 256X4 BP-ROM ASSY	V						
114	01	94375109	9		1	PC	RES SSIP NTWK 1000 R 3P 1.0W	P						
115	01	52629949	0		500	FT	WIR WW 30GA SLD WHT UL KYNAR	W			13581			7926
115	02	52629949	0		1 250	FT	WIR WW 30GA SLD WHT UL KYNAR	W		13581			7926	
							0100 TOTAL LINES							

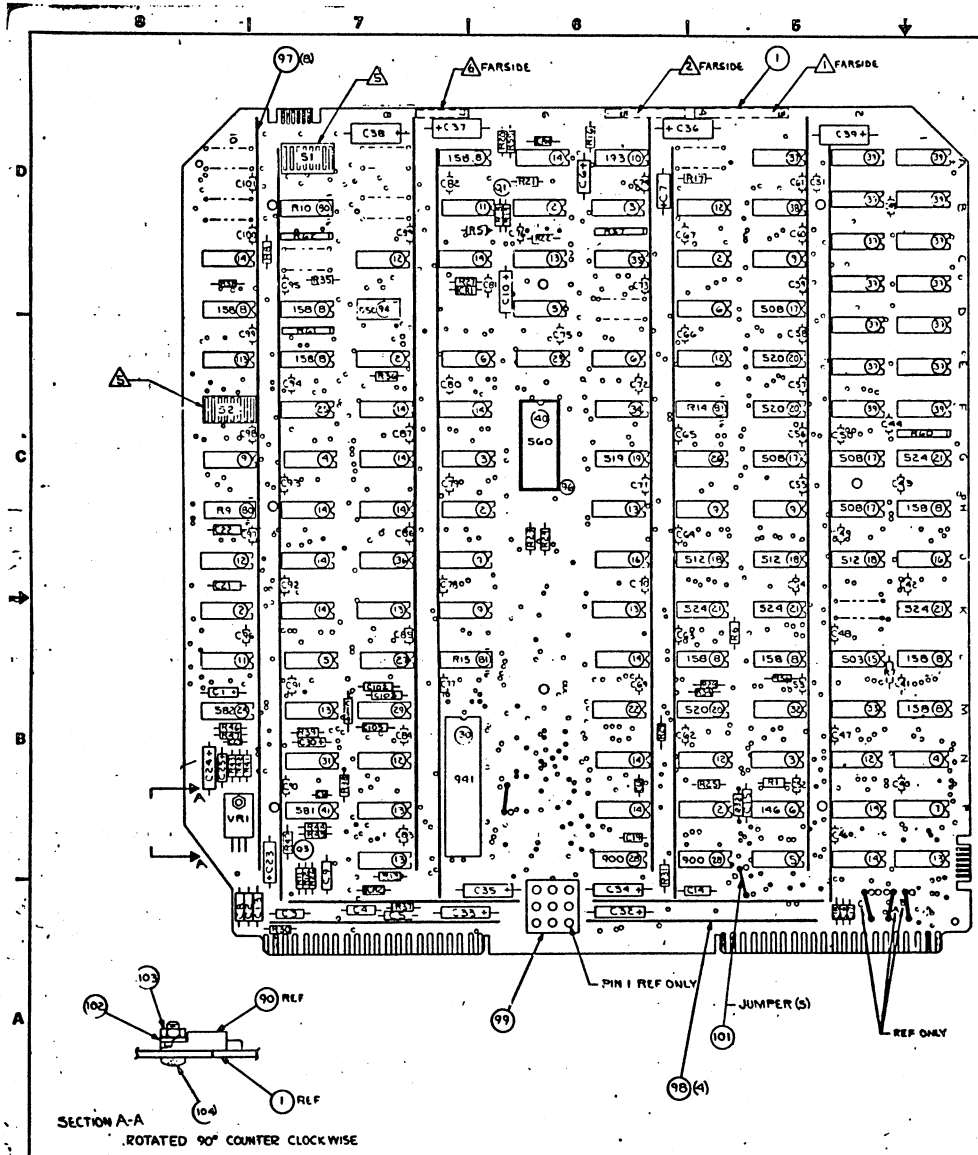

CROSS REFERENCE TABLE	
FIND NO.	REFERENCE DESIGNATION
45	Q1
46	Q3
49	C2,C3,C4,C5,C8,C14,C15 C21,C22
50	C24
51	C9,C13
52	C1,C6,C7,C23
53	C25
54	C10
55	C16,C17,C18,C19,C102,C103,C104,C105
56 △3	C31,C40,C41,C42,C43 C44,C45,C46,C47,C48,C49 THRU87,89 THRU101
57	C32,C33,C34,C35,C36,C37,C38,C39
58	C30
60	C27
66	R21
67	R27
68	R26,R30
69	R5,R6,R7,R8,R11,R12,R13,R25 R35,R36 R41,R45
70	R1,R37
71	R20
72	R18
73	R19,R22
74	R17
75	R31,R32
76	R23
77	R24
78	R16
80	R9,R10
81	R14,R15
82	R38
83	R39
84	R40
85	R42
86	R43
87	R44
88	R46,R47
89	CR1,CR2,CR10
90	VR1
91	S1,S2
109	R28,R29,R34,R56
110	R57,R60,R61
111	R59
112	R58
114	R62

SHEET REVISION STATUS	REVISION RECORD					
	REV	ECO	DESCRIPTION	DRFT	DATE	CHKD	APP
	A	12970 24	RELEASED CLASS "A"	/	2/79	/	[illegible]
	B	13344	REVISED PER ECO	6	6-6-79	[illegible]	[illegible]
	C	13581	REVISED PER ECO	NJA	7-12-79	[illegible]	[illegible]

NOTES:

1. APPLY ASSY NO., REV. LEVEL, AND LOC. CODE IN AREA SHOWN. MARK PER CDC SPEC 10121508; CHARACTER HEIGHT .12 (12PT) COLOR WHITE.
2. MARK SERIAL NO. IN AREA SHOWN PER CDC STD. 1.81.025 AND CDC SPEC 10121508. .12 HEIGHT, COLOR WHITE.
3. CAPACITOR C88 NOT USED.
4. FIND NUMBERS, ELEMENT IDENTIFIERS, AND REFERENCE DESIGNATIONS ARE FOR REFERENCE ONLY AND DO NOT APPEAR ON PART.
5. SWITCH CONTACTS ARE CLOSED WHEN TOGGLE TOWARD TOP OF BOARD IS DEPRESSED.
6. APPLY 9ASD IN AREA SHOWN. MARK PER CDC SPEC 10121508, CHARACTER HEIGHT .12 (12PT) COLOR WHITE.

8. PERMANENT REWORK SHALL CONFORM TO CDC SPEC 16019500.

CHANGE TABLE	
DELETIONS	ADDITIONS
CUT FOIL: 1) P3-8 (C.S.) 2) P4-13 (S.S.)	ADD WIRE: 1) P3-8 TO N8-1 2) P4-13 TO P3-9

APL 90446085 DETACHED LISTS

DO NOT SCALE DRAWING

CONTROL DATA

FIRST USED ON: CC555-A

DWN: W. HERMAN 1-20-79

TITLE: P.C CARD ASSY, 9ASD (LOGIC MODULE)

CODE IDENT 13920 D DRAWING NO 90446085

SCALE NONE SHEET 1 OF 1

90446085

BUILD ARC 214

ASSEMBLY PARTS LIST

PRINT DATE 07-03-79 | PAGE 1 | FILE CHANGE NO 00013581

DIV	ASSEMBLY NUMBER	CD	REV.	DWG	DESCRIPTION	MC	STATUS	STATUS DATE	ENG RESP	FILE DATE
0860	90446085	4	C	D	CD ASSY 9A3D LOG MOD	S	REL	02-02-79	CC555	07-03-79

T	FIND NO	LI	PART NUMBER	CD	M	QUANTITY	U/M	PART DESCRIPTION	MC	YLD	ECO NO. IN	ECO NO. OUT	S/N	WE IN	WE OUT
	001	01	90460763	7		1	PC	REPLACED BY 90446100 13403	P			13344			7936
	001	02	90446100	1		1	PC	PW BD MULTI USE	P		13344			7936	
	002	01	66299099	3		6	PC	IC 7400 TTL QUAD 2-IN NAND	P						
	003	01	66299100	9		3	PC	IC 7410 141 TTL3 3I/P NAND	P						
	004	01	66299102	5		2	PC	IC TTL DUAL 4-IN NAND	P						
	005	01	66299103	3		3	PC	IC 7402 148 TTL QUAD 2-IN NOR	P						
	006	01	39389700	4		4	PC	IC 7404 146-TTL HEX INVTR	P						
	007	01	88885700	0		1	PC	IC TYPE 7486TTL QUAD 2 I/P	P						
	008	01	51761500	1		9	PC	IC 74161/9316 158 TTL CNTR 6	P						
	009	01	88886400	6		6	PC	IC TYPE 74157 TTL QUAD 2I/P	P						
	010	01	50254300	2		1	PC	IC 74123 193 TTL 2 RETGR MVB	P						
	011	01	96744155	1		2	PC	IC 7406 DRVR HEX INV BUFFER	P						
	012	01	88897000	1		7	PC	IC 7408 201 TTL QUAD 2-IN AND	P						
	013	01	96744172	6		8	PC	IC 7432 218 TTL QUAD 2IN OR	P						
	014	01	88885400	7		15	PC	IC TYPE 9024 TTL DUAL FLIP FO	P						
	015	01	95814600	3		1	PC	IC 74160/9310 503 TTL UP DEC	P						
	016	01	66299110	8		2	PC	IC TTL 1 OF 10 DECODER	P						
	017	01	66299111	6		4	PC	IC TTL DUAL 4 TO 1 MUX	P						
	018	01	52342700	3		3	PC	IC 74191/9336 512 TTL 4B BIN	P						
	019	01	88882800	1		1	PC	IC 74174 519 TTL 6BIT D LATCH	P						
	020	01	15104500	2		3	PC	IC 74175 520 TTL 4 BIT D LTCH	P						

BUILD ARC 214

ASSEMBLY PARTS LIST

PRINT DATE 07-03-79 | PAGE 2 | FILE CHANGE NO 00013581

DIV	ASSEMBLY NUMBER	CD	REV.	DWG	DESCRIPTION	MC	STATUS	STATUS DATE	ENG RESP	FILE DATE
0860	90446085	4	C	D	CD ASSY 9A3D LOG MOD	S	REL	02-02-79	CC555	07-03-79

T	FIND NO	LI	PART NUMBER	CD	M	QUANTITY	U/M	PART DESCRIPTION	MC	YLD	ECO NO. IN	ECO NO. OUT	S/N	WE IN	WE OUT
	021	01	15108600	6		4	PC	IC 7485 524 TTL 4B MGNTD CPTR	P						
	022	01	88923600	6		1	PC	IC TYPE 74164 TTL 8BIT	P						
	023	01	88923700	4		1	PC	IC TYPE 74165 TTL 8BIT	P						
	024	01	15105700	7		1	PC	IC 4024 582 TTL DL/V CONT MVB	P						
	025	01	51861706	3		1	PC	IC 2568IT 32X8 BP-ROM ASSY	G						
	026	01	51861711	3		1	PC	IC 2568IT 32X8 BP-ROM ASSY	V						
	027	01	51861709	7		1	PC	IC 2568IT 32X8 BP-ROM ASSY	V						
	028	01	36186400	2		2	PC	IC MC1488 900 DTL QD LN DRVR	P						
	029	01	36186500	9		1	PC	IC MC1489 901 DTL QD LN RCVR	P						
	030	01	15125700	3		1	PC	IC TR1602A 941 MOS ASYN XCVR	P						
	031	01	88896100	0		1	PC	IC 7414 843 TTL HEX NAND RCVR	P						
	032	01	51892308	1		1	PC	IC 1024BIT 256X4 BP-ROM ASSY	V						
	033	01	51892309	9		1	PC	IC 1024BIT 256X4 BP-ROM ASSY	V						
	034	01	51892310	7		1	PC	IC 1024BIT 256X4 BP-ROM ASSY	V						
	035	01	51892311	5		1	PC	IC 1024BIT 256X4 BP-ROM ASSY	V						
	036	01	51892315	6		1	PC	IC 1024BIT 256X4 BP-ROM ASSY	V						
	037	01	51892313	1		1	PC	IC 1024BIT 256X4 BP-ROM ASSY	V						
	038	01	51892314	9		1	PC	IC 1024BIT 256X4 BP-ROM ASSY	V						
	039	01	15140300	3		14	PC	IC 2102A-4 772A MOS 1024B RAM	P						
	040	01	15144500	4		1	PC	IC SCH3750L 560 MOS 8192B ROM	P						
	041	01	15105600	9		1	PC	IC 4044 581 TTL PH/FREQ DETR	P						

BUILD ARC 214

ASSEMBLY PARTS LIST

PRINT DATE 07-03-79 | PAGE 3 | PRE CHANGE NO. 00013581

DIV.	ASSEMBLY NUMBER	CD	REV.	DWG.	DESCRIPTION	MC	STATUS	STATUS DATE	ENG. RESP	FILE DATE
0860	90446085	4	C	D	CD ASSY 9ASD LOG MOD	S	REL	02-02-79	CC555	07-03-79

FIND NO	SI	PART NUMBER	CD	QUANTITY	U/M	PART DESCRIPTION	MC	YLD	ECO NO IN	ECO NO OUT	S/N	WK IN	WK OUT
045	01	51003059	6	1	PC	XSTR DD1 106 EPITAX NPN SIL	P						
046	01	51887100	9	1	PC	XSTR TO-18 LOW LVL NPN SIL	P						
049	01	51839147	9	9	PC	CAP FXD CER .100UF 10P 100VDC	P						
050	01	24504369	0	1	PC	CAP FXD TANT 10UF 20P 15VDCW	P						
051	01	51839142	0	2	PC	CAP FXD CER .033UF 10P 100VDC	P						
052	01	51879105	8	4	PC	CAP FXD TANT 100UF 10P 6VDCW	P						
053	01	24504317	9	1	PC	CAP FXD TANT .1UF 20P 35VDCW	P						
054	01	24504322	9	1	PC	CAP FXD TANT 47UF 20P 6VDCW	P						
055	01	51839119	8	8	PC	CAP FXD CER 390PF 10P 100VDC	P						
056	01	51001120	8	62	PC	CAP CER F-Z .01UF +80-20P 25V	P						
057	01	51786437	7	8	PC	CAP SOLID TANT 33UF 20P 15V	P						
058	01	24504325	2	1	PC	CAP FXD TANT .47UF 20P 35VDCW	P						
060	01	94227216	2	1	PC	CAP DIP MICA 39PF 1PF 300VDCW	P						
066	01	24500055	9	1	PC	RES FXD COMP 470 OHM 5P 1/4W	P						
067	01	24500087	2	1	PC	RES FXD COMP 10K OHM 5P 1/4W	P						
068	01	24500039	3	2	PC	RES FXD COMP 100 OHM 5P 1/4W	P						
069	01	24500063	3	12	PC	RES FXD COMP 1000 OHM 5P 1/4W	P						
070	01	24500079	9	2	PC	RES FXD COMP 4700 OHM 5P 1/4W	P						
071	01	24500027	8	1	PC	RES FXD COMP 33 OHM 5P 1/4W	P						
072	01	24500036	9	1	PC	RES FXD COMP 75 OHM 5P 1/4W	P						
073	01	24500048	4	2	PC	RES FXD COMP 240 OHM 5P 1/4W	P						

BUILD ARC 214

ASSEMBLY PARTS LIST

PRINT DATE 07-03-79 | PAGE 4 | PRE CHANGE NO. 00013581

DIV.	ASSEMBLY NUMBER	CD	REV.	DWG.	DESCRIPTION	MC	STATUS	STATUS DATE	ENG. RESP	FILE DATE
0860	90446085	4	C	D	CD ASSY 9ASD LOG MOD	S	REL	02-02-79	CC555	07-03-79

FIND NO	SI	PART NUMBER	CD	QUANTITY	U/M	PART DESCRIPTION	MC	YLD	ECO NO IN	ECO NO OUT	S/N	WK IN	WK OUT
074	01	24500081	5	1	PC	RES FXD COMP 5600 OHM 5P 1/4W	P						
075	01	24500073	2	2	PC	RES FXD COMP 2700 OHM 5P 1/4W	P						
076	01	11705903	7	1	PC	RES FXD COMP 43K OHM 5P 1/4W	P						
077	01	24500098	9	1	PC	RES FXD COMP 30K OHM 5P 1/4W	P						
078	01	24500084	9	1	PC	RES FXD COMP 7500 OHM 5P 1/4W	P						
080	01	62012906	4	2	PC	RES MOD DUAL 1K OHMS 125MW	P						
081	01	62012920	5	2	PC	RES MOD DUAL 4.7K OHM 125MW	P						
082	01	24500056	7	1	PC	RES FXD COMP 510 OHM 5P 1/4W	P						
083	01	24500077	3	1	PC	RES FXD COMP 3900 OHM 5P 1/4W	P						
084	01	11705908	6	1	PC	RES FXD COMP 68K OHM 5P 1/4W	P						
085	01	24500071	6	1	PC	RES FXD COMP 2200 OHM 5P 1/4W	P						
086	01	24500047	6	1	PC	RES FXD COMP 220 OHM 5P 1/4W	P						
087	01	24500074	0	1	PC	RES FXD COMP 3000 OHM 5P 1/4W	P						
088	01	94360292	0	2	PC	RES FXD FM 909 OHM 1P 1/4W	P						
089	01	51007385	1	3	PC	DIO IN4148 10MA MICRO SIL 30V	P						
090	01	15151500	4	1	PC	IC UA7800+5 35TA POS V RGLTR	P						
091	01	51862504	1	2	PC	SW, PC BD TGL 8 IN-LINE SPST	P						
094	01	51904105	7	1	PC	OSC, TTL DIP 6.745MHZ 500MW	P						
096	01	51848404	3	1	PC	SOCKET, IC 24 POS D-T-L TIN	P						
097	01	71486102	8	8	PC	BUS, PWR 11.35LG W/POSTS CU	P						
098	01	71486101	0	4	PC	BUS, PWR 3.6LG W/POSTS CU	P						

BUILD ARC 214

ASSEMBLY PARTS LIST

PRINT DATE 07-03-79 | PAGE 5 | FSE CHANGE NO. 00013581

DIV.	ASSEMBLY NUMBER	CD	REV	DWG.	DESCRIPTION	MC	STATUS	STATUS DATE	ENG RESP	FSE DATE
0860	90446085	4	C	D	CD ASSY 9A5D LOG MOD	9	REL	02-02-79	CC585	07-03-79

FIND NO	LI	PART NUMBER	CD	M	QUANTITY	U/M	PART DESCRIPTION	MC	YLD	ECO NO IN	ECO NO OUT	S/N	WK IN	WK OUT
099	01	51906111	3		1	PC	CONN, 9 PIN PC MTD GOLD FIO 3	P						
101	01	95642805	6		500	FT	WIR SLD 24GA TINNED	W						
102	01	10125801	0		1	PC	WSHR, NO,4 SPG LOCK STL ZP	B						
103	01	10125103	1		1	PC	NUT, HEX 4-40 HSCR STL ZP	B						
104	01	92780084	7		1	PC	HSCR PAN SLT 4-40X5/16 SST P	B						
105	01	16006500	9		REF	PC	FABRICATION SPECIFICATION	D						
106	01	10121508	5		REF	PC	MARKING, INK STP-STENCIL-S/C	D						
107	01	16019500	4		REF	PC	REQ/INSTALLATION OF EXT CKTS	D						
108	01	62201031	2		REF	PC	LOGIC DIAG	D						
109	01	24500075	7		4	PC	RES FXD COMP 3300 OHM 5P 1/4W	P						
110	01	94375102	4		3	PC	RES SSIP NTWK 3300 R 3P 1.0W	P						
111	01	24500061	7		1	PC	RES FXD COMP 820 OHM 5P 1/4W	P						
112	01	24500059	1		1	PC	RES FXD COMP 680 OHM 5P 1/4W	P						
113	01	51892316	4		1	PC	IC 1024BIT 256X4 BP-ROM ASSY	V						
114	01	94375109	9		1	PC	RES SSIP NTWK 1000 R 3P 1.0W	P						
115	01	52629949	0		750	FT	WIR WW 30GA SLD WHT UL KYNAR	W		13581			7926	
							0100 TOTAL LINES							

7-76.4

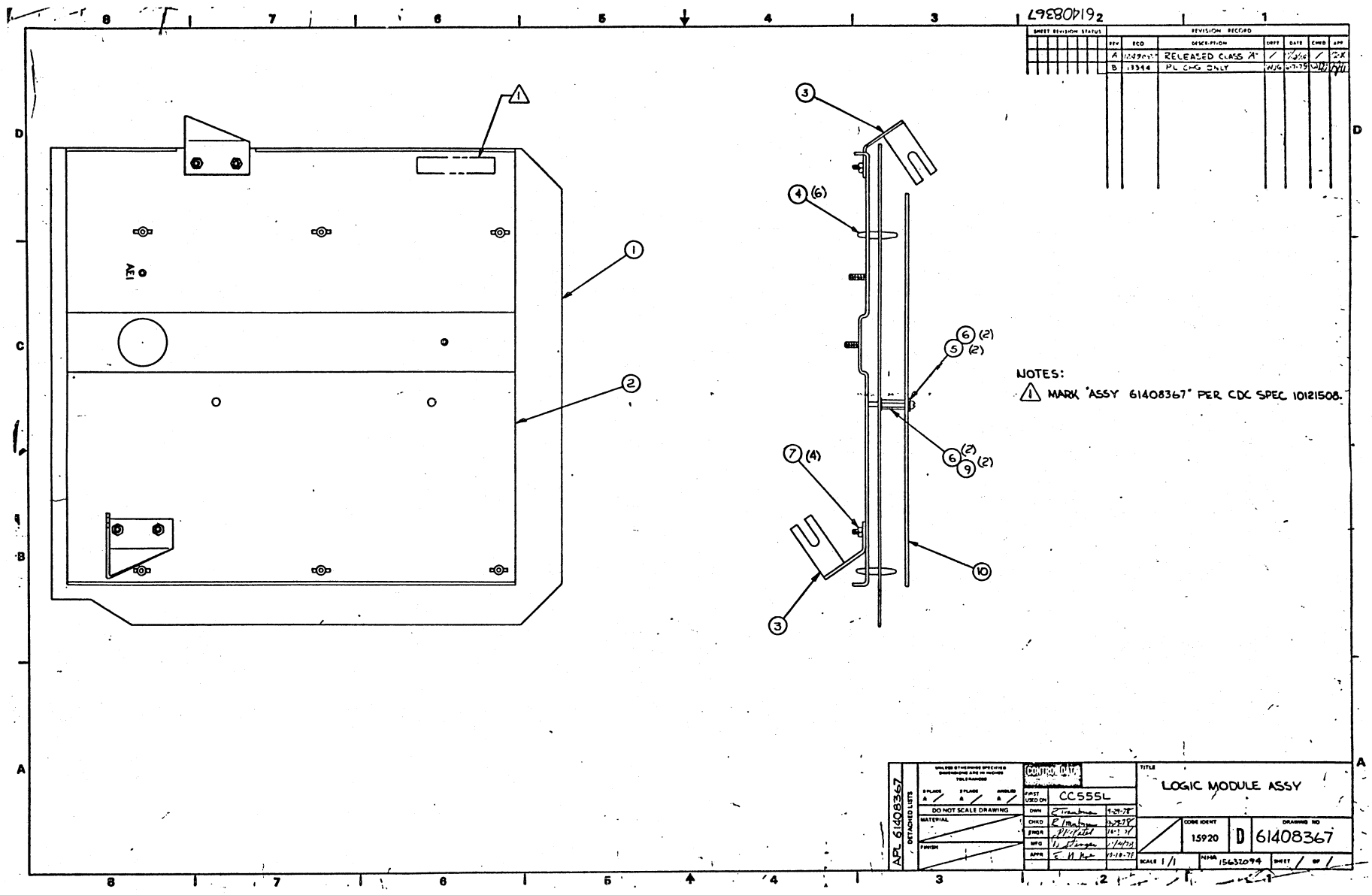

6295400 F

BUILD ARC 440

ASSEMBLY PARTS LIST

PRINT DATE	PAGE	PRE CHANGE NO.
05-14-79	1	00013344

DIV.	ASSEMBLY NUMBER	CD	REV.	DWG.	DESCRIPTION	MC	STATUS	STATUS DATE	ENG. RESP	FILE DATE
0860	61408307	3	B	0	LOGIC MODULE ASSY	N	REL	10-12-78		05-14-79

F	FIND NO	LI	PART NUMBER	CD	M	QUANTITY	U/M	PART DESCRIPTION	MC	YLD	ECO. NO. IN	ECO. NO. OUT	S/N	WE IN	WE OUT
	001	01	90445967	4		1	PC	CD ASSY 8CAD LOG MOD	A			13344			7936
	001	02	90446087	0		1	PC	CD ASSY 9AUD LOG MOD	A		13344			7936	
	002	01	71485900	6		1	PC	MOUNTING PLATE	P						
	003	01	71488500	1		2	PC	BRACKET MTG PLATE	P						
	004	01	51777300	8		6	PC	SPRT, CKT BD 3/16 NYL FIG 1	P						
	005	01	10127104	7		2	PC	MSCR PAN PHL 4-40X.375 STL ZP	B						
	006	01	10126400	0		4	PC	WSHR, NO.4 EXT/T LK STL ZP	B						
	007	01	10122901	1		4	PC	NUT, HEX 6-32 TWIN-LKG STL	B						
	009	01	51875304	1		2	PC	STDOFF, M-F HEX BRS 4-40X5/8	B						
	010	01	71491829	9		1	PC	SHIELD(PWB ASSY)	P						
								0010 TOTAL LINES							

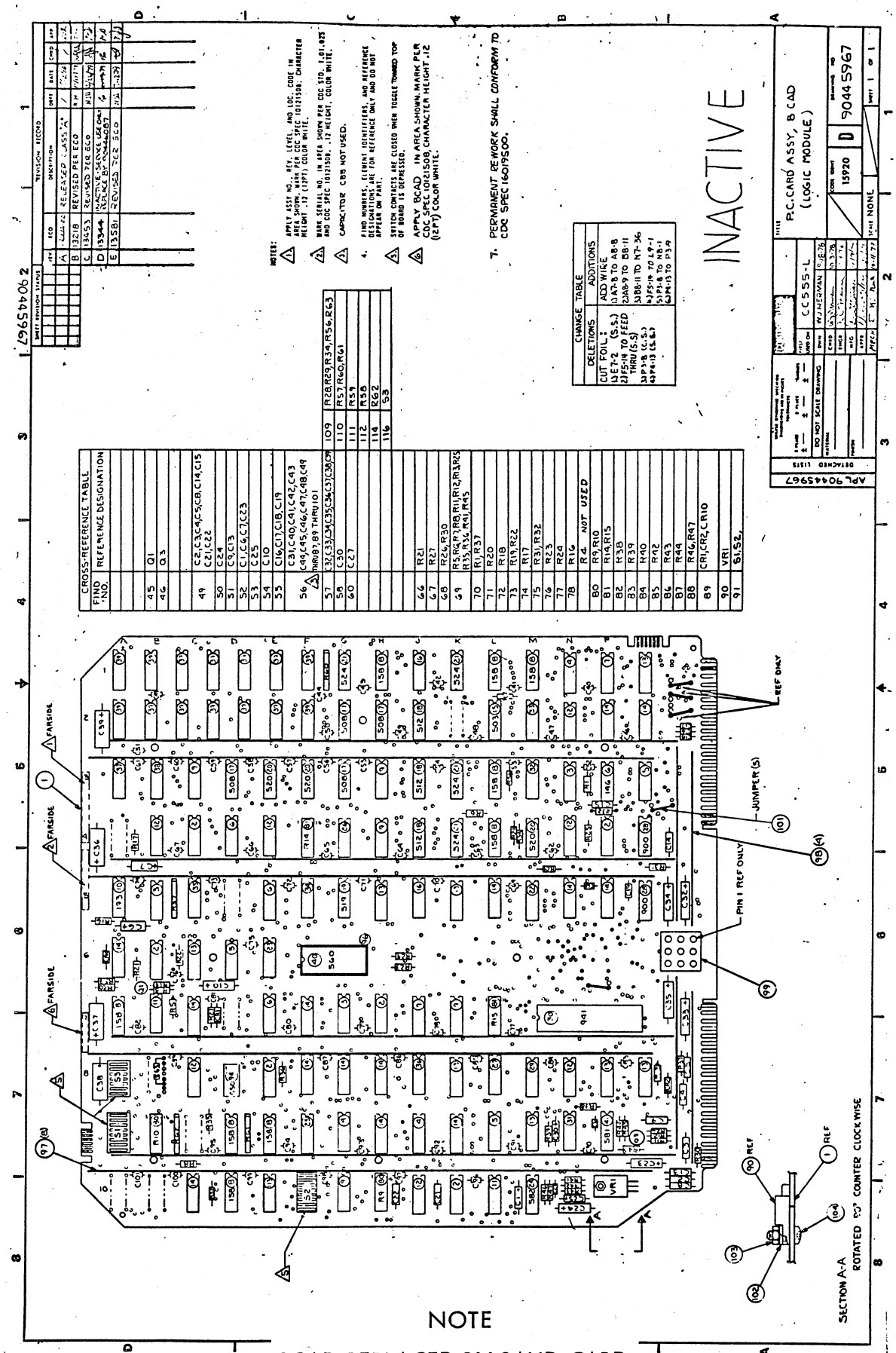

NOTE

8CAD REPLACED BY 9AUD CARD,
PART NUMBER 90446087

BUILD ARC 210

ASSEMBLY PARTS LIST

PRINT DATE 07-03-79 | PAGE 1 | FNF CHANGE NO. 00013581

DIV	ASSEMBLY NUMBER	CD	REV.	DWG	DESCRIPTION	MC	STATUS	STATUS DATE	ENG REQ	FNF DATE
0860	90445967	4	E	D	REPLACED BY 90446087 13344A	A	INA	05-04-79	CC555-L	07-03-79

T	FIND NO	LI	PART NUMBER	CD	M	QUANTITY	U/M	PART DESCRIPTION	MC	YLD	ECO NO. IN	ECO NO OUT	S/N	WK IN	WK OUT
	001	01	90460763	7		1	PC	REPLACED BY 90446100 13403	P						
	002	01	66299099	3		6	PC	IC 7400 TTL QUAD 2-IN NAND	P						
	003	01	66299100	9		3	PC	IC 7410 141 TTL3 3I/P NAND	P						
	004	01	66299102	5		2	PC	IC TTL DUAL 4-IN NAND	P						
	005	01	66299103	3		3	PC	IC 7402 148 TTL QUAD 2-IN NOR	P						
	006	01	39389700	4		4	PC	IC 7404 146-TTL HEX INVTR	P						
	007	01	88885700	0		1	PC	IC TYPE 7486TTL QUAD 2 I/P	P						
	008	01	51761500	1		9	PC	IC 74161/9316 158 TTL CNTR 4	P						
	009	01	88886400	6		6	PC	IC TYPE 74157 TTL QUAD 2I/P	P						
	010	01	50254300	2		1	PC	IC 74123 193 TTL 2 RETGR MVB	P						
	011	01	96744155	1		2	PC	IC 7406 DRVR HEX INV BUFFER	P						
	012	01	88897000	1		7	PC	IC 7408 201 TTL QUAD 2-IN AND	P						
	013	01	96744172	6		8	PC	IC 7432 218 TTL QUAD 2IN OR	P						
	014	01	88885400	7		15	PC	IC TYPE 9024 TTL DUAL FLIP FO	P						
	015	01	95814600	3		1	PC	IC 74160/9310 503 TTL UP DEC	P						
	016	01	66299110	8		2	PC	IC TTL 1 OF 10 DECODER	P						
	017	01	66299111	6		4	PC	IC TTL DUAL 4 TO 1 MUX	P						
	018	01	52342700	3		3	PC	IC 74191/9336 512 TTL 4B BIN	P						
	019	01	88882800	1		1	PC	IC 74174 519 TTL 6BIT D LATCH	P						
	020	01	15104500	2		3	PC	IC 74175 520 TTL 4 BIT D LTCH	P						
	021	01	15108600	6		4	PC	IC 7485 524 TTL 4B MGNTD CPTR	P						

BUILD ARC 210

ASSEMBLY PARTS LIST

PRINT DATE 07-03-79 | PAGE 2 | FNF CHANGE NO. 00013581

DIV	ASSEMBLY NUMBER	CD	REV.	DWG	DESCRIPTION	MC	STATUS	STATUS DATE	ENG REQ	FNF DATE
0860	90445967	4	E	D	REPLACED BY 90446087 13344A	A	INA	05-04-79	CC555-L	07-03-79

T	FIND NO	LI	PART NUMBER	CD	M	QUANTITY	U/M	PART DESCRIPTION	MC	YLD	ECO NO. IN	ECO NO OUT	S/N	WK IN	WK OUT
	022	01	88923600	6		1	PC	IC TYPE 74164 TTL 8BIT	P						
	023	01	88923700	4		1	PC	IC TYPE 74165 TTL 8BIT	P						
	024	01	15105700	7		1	PC	IC 4024 582 TTL OL/V CONT MVB	P						
	025	01	51861706	3		1	PC	IC 256BIT 32X8 BP-ROM ASSY	G						
	026	01	51861711	3		1	PC	IC 256BIT 32X8 BP-ROM ASSY	V						
	027	01	51861709	7		1	PC	IC 256BIT 32X8 BP-ROM ASSY	V						
	028	01	36186400	2		2	PC	IC MC1488 900 DTL QD LN DRVR	P						
	029	01	36186500	9		1	PC	IC MC1489 901 DTL QD LN RCVR	P						
	030	01	15125700	3		1	PC	IC TR1602A 941 MOS ASYN XCVR	P						
	031	01	88896100	0		1	PC	IC 7414 843 TTL HEX NAND RCVR	P						
	032	01	51892308	1		1	PC	IC 1024BIT 256X4 BP-ROM ASSY	V						
	033	01	51892309	9		1	PC	IC 1024BIT 256X4 BP-ROM ASSY	V						
	034	01	51892310	7		1	PC	IC 1024BIT 256X4 BP-ROM ASSY	V						
	035	01	51892311	5		1	PC	IC 1024BIT 256X4 BP-ROM ASSY	V						
	036	01	51892315	6		1	PC	IC 1024BIT 256X4 BP-ROM ASSY	V						
	037	01	51892313	1		1	PC	IC 1024BIT 256X4 BP-ROM ASSY	V						
	038	01	51892314	9		1	PC	IC 1024BIT 256X4 BP-ROM ASSY	V						
	039	01	15140300	3		14	PC	IC 2102A-4 772A MOS 1024B RAM	P						
	040	01	15144500	4		1	PC	IC SCM3750L 560 MOS 8192B ROM	P						
	041	01	15108600	9		1	PC	IC 4044 581 TTL PH/FREQ DETH	P						
	045	01	51003059	6		1	PC	XSTR DD1 106 EPITAX NPN SIL	P						

BUILD ARC 210

ASSEMBLY PARTS LIST

PRINT DATE 07-03-79 | PAGE 3 | PRE CHANGE NO. 00013581

DIV.	ASSEMBLY NUMBER	CD	REV.	DWG.	DESCRIPTION	MC	STATUS	STATUS DATE	ENG. RESP.	FILE DATE
0860	90445967	4	E	D	REPLACED BY 90446087 13344A	A	INA	05-04-79	CC555-L	07-03-79

T	FIND NO	LI	PART NUMBER	CD	M	QUANTITY	U/M	PART DESCRIPTION	MC	YLD	ECO. NO. IN	ECO. NO. OUT	S/N	WK IN	WK OUT
	046	01	51887100	9		1	PC	XSTR TO-18 LOW LVL NPN SIL	P						
	049	01	51839147	9		9	PC	CAP FXD CER .100UF 10P 100VDC	P						
	050	01	24504369	0		1	PC	CAP FXD TANT 10UF 20P 15VDCW	P						
	051	01	51839142	0		2	PC	CAP FXD CER .033UF 10P 100VDC	P						
	052	01	51879165	8		4	PC	CAP FXD TANT 100UF 10P 6VDCW	P						
	053	01	24504317	9		1	PC	CAP FXD TANT .1UF 20P 35VDCW	P						
	054	01	24504322	9		1	PC	CAP FXD TANT 47UF 20P 6VDCW	P						
	055	01	51839119	8		4	PC	CAP FXD CER 390PF 10P 100VDC	P						
	056	01	51001120	8		62	PC	CAP CER F-Z .01UF +80-20P 25V	P						
	057	01	51786437	7		8	PC	CAP SOLID TANT 33UF 20P 15V	P						
	058	01	24504312	0		1	PC	CAP FXD TANT 6.8UF 20P 6WVDC	P						
	060	01	94227216	2		1	PC	CAP DIP MICA 39PF 1PF 300VDCW	P						
	066	01	24500055	9		1	PC	RES FXD COMP 470 OHM 5P 1/4W	P						
	067	01	24500087	2		1	PC	RES FXD COMP 10K OHM 5P 1/4W	P						
	068	01	24500039	3		2	PC	RES FXD COMP 100 OHM 5P 1/4W	P						
	069	01	24500063	3		12	PC	RES FXD COMP 1000 OHM 5P 1/4W	P						
	070	01	24500079	9		2	PC	RES FXD COMP 4700 OHM 5P 1/4W	P						
	071	01	24500027	8		1	PC	RES FXD COMP 33 OHM 5P 1/4W	P						
	072	01	24500036	9		1	PC	RES FXD COMP 75 OHM 5P 1/4W	P						
	073	01	24500048	4		2	PC	RES FXD COMP 240 OHM 5P 1/4W	P						
	074	01	24500081	5		1	PC	RES FXD COMP 5600 OHM 5P 1/4W	P						

BUILD ARC 210

ASSEMBLY PARTS LIST

PRINT DATE 07-03-79 | PAGE 4 | PRE CHANGE NO. 00013581

DIV.	ASSEMBLY NUMBER	CD	REV.	DWG.	DESCRIPTION	MC	STATUS	STATUS DATE	ENG. RESP.	FILE DATE
0860	90445967	4	E	D	REPLACED BY 90446087 13344A	A	INA	05-04-79	CC555-L	07-03-79

T	FIND NO	LI	PART NUMBER	CD	M	QUANTITY	U/M	PART DESCRIPTION	MC	YLD	ECO. NO. IN	ECO. NO. OUT	S/N	WK IN	WK OUT
	075	01	24500073	2		2	PC	RES FXD COMP 2700 OHM 5P 1/4W	P						
	076	01	17705903	7		1	PC	RES FXD COMP 43K OHM 5P 1/4W	P						
	077	01	24500098	9		1	PC	RES FXD COMP 30K OHM 5P 1/4W	P						
	078	01	24500084	9		1	PC	RES FXD COMP 7500 OHM 5P 1/4W	P						
	080	01	62012906	4		2	PC	RES MOD DUAL 1K OHMS 125MW	P						
	081	01	62012920	5		2	PC	RES MOD DUAL 4.7K OHM 125MW	P						
	082	01	24500056	7		1	PC	RES FXD COMP 510 OHM 5P 1/4W	P						
	083	01	24500077	3		1	PC	RES FXD COMP 3900 OHM 5P 1/4W	P						
	084	01	17705908	6		1	PC	RES FXD COMP 68K OHM 5P 1/4W	P						
	085	01	24500071	6		1	PC	RES FXD COMP 2200 OHM 5P 1/4W	P						
	086	01	24500047	6		1	PC	RES FXD COMP 220 OHM 5P 1/4W	P						
	087	01	24500074	0		1	PC	RES FXD COMP 3000 OHM 5P 1/4W	P						
	088	01	94360292	0		2	PC	RES FXD FM 909 OHM 1P 1/4W	P						
	089	01	51007385	1		3	PC	DIO IN4148 10MA MICRO SIL 30V	P						
	090	01	15151500	4		1	PC	IC UA7800+5 3ST4 POS V RGLTR	P						
	091	01	51862504	1		3	PC	SW, PC BD TGL 8 IN-LINE SPST	P			13453			7915
	091	02	51862504	1		2	PC	SW, PC BD TGL 8 IN-LINE SPST	P		13453			7915	
	094	01	51904105	7		1	PC	OSC, TTL DIP 6.745MHZ 500MW	P						
	096	01	51848404	3		1	PC	SOCKET, IC 24 POS D-I-L TIN	P						
	097	01	71486102	8		8	PC	BUS, PWR 11.3LG W/POSTS CU	P						
	098	01	71486101	0		4	PC	BUS, PWR 3.6LG W/POSTS CU	P						

BUILD ARC 210

ASSEMBLY PARTS LIST

PRINT DATE 07-03-79 | PAGE 5 | FAB CHANGE NO 00013581

DIV	ASSEMBLY NUMBER	CO	REV	DWG	DESCRIPTION	MC	STATUS	STATUS DATE	ENG RESP	FILE DATE
0860	90445967	A	E	D	REPLACED BY 90446087 13344A	A	INA	05-04-79	CC555-L	07-03-79

FIND NO	LI	PART NUMBER	CD	M	QUANTITY	U/M	PART DESCRIPTION	MC	VLD	ECO NO IN	ECO NO OUT	S/N	WK IN	WK OUT
099	01	51906111	3		1	PC	CONN, 9 PIN PC MTD GOLD FIG 3	P						
101	01	95642805	6		500	FT	WIR SLD 24GA TINNED	W						
102	01	10125801	0		1	PC	WSHR, NO.4 SPG LOCK STL ZP	B						
103	01	10125103	1		1	PC	NUT, HEX 4-40 HSCR STL ZP	B						
104	01	92780084	7		1	PC	MSCR PAN SLT 4-40X5/16 SST P	B						
105	01	16006500	9		REF	PC	FABRICATION SPECIFICATION	D						
106	01	10121508	5		REF	PC	MARKING, INK STP-STENCIL-S/C	D						
107	01	16019500	4		REF	PC	REQ/INSTALLATION OF EXT CKTS	D						
108	01	90445966	6		REF	PC	SCH DIAG 8CAD MULTI-USE	D						
109	01	24500075	7		5	PC	RES FXD COMP 3300 OHM 5P 1/4W	P						
110	01	94375102	4		3	PC	RES 8SIP NTWK 3300 R 3P 1.0W	P						
111	01	24500061	7		1	PC	RES FXD COMP 820 OHM 5P 1/4W	P						
112	01	24500059	1		1	PC	RES FXD COMP 680 OHM 5P 1/4W	P						
113	01	51892316	4		1	PC	IC 1024BIT 256X4 BP-ROM ASSY	V						
114	01	94375109	9		1	PC	RES 8SIP NTWK 1000 R 3P 1.0W	P						
115	02	52629949	0		2 500	FT	WIR WW 30GA SLD WHT UL KYNAR	W		13218	13581		7846	7926
115	03	52629949	0		3 250	FT	WIR WW 30GA SLD WHT UL KYNAR	W		13581			7926	
116	01	51862500	9		1	PC	SW, PC BD TGL 7 IN-LINE SPST	P		13453			7915	
							0102 TOTAL LINES							

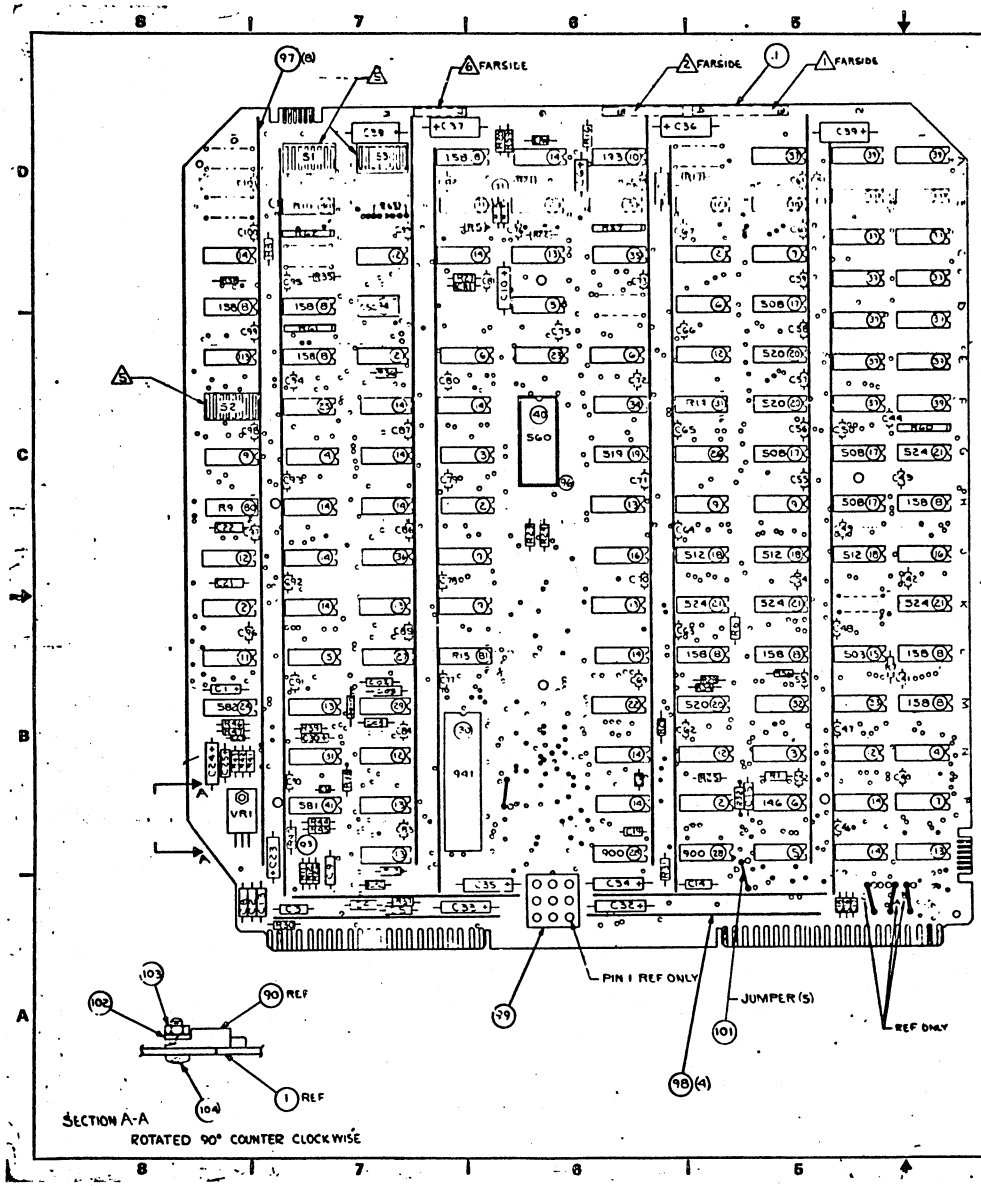

CROSS-REFERENCE TABLE	
FIND NO.	REFERENCE DESIGNATION
45	[illegible]
46	[illegible]
49	C2,C3,C4,C5,C8,C14,C15 C21,C22
50	C24
51	C9,C13
52	C1,C6,C7,C23
53	C25
54	C10
55	C16,C17,C18,C19
56	C31,C40,C41,C42,C43 C44,C45,C46,C47,C48,C49 THRU 87, 89 THRU 101
57	C32,C33,C34,C35,C36,C37,C38,C39
58	C30
60	C27
66	R21
67	R27
68	R26,R30
69	R5,R6,R7,R8,R11,R12,R13,R25 R35,R36,R41,R45
70	R1,R37
71	R20
72	R18
73	R19,R22
74	R17
75	R31,R32
76	R23
77	R24
78	R16
	R4 NOT USED
80	R9,R10
81	R14,R15
82	R38
83	R39
84	R40
85	R42
86	R43
87	R44
88	R46,R47
89	CR1,CR2,CR10
90	VR1
91	S1,S2
109	R28,R29,R34,R56,R63
110	R57,R60,R61
111	R59
112	R58
114	R62
116	S3

CHANGE TABLE	
DELETIONS	ADDITIONS
CUT FOIL: 1) E7-2 (S.S.) 2) P3-8 (C.S.) 3) P4-13 (S.S.)	ADD WIRE 1) A7-8 TO A8-8 2) A8-9 TO B8-11 3) B8-11 TO N7-36 4) P3-8 TO N8-1 5) P4-13 TO P3-9

NOTES:

1. APPLY ASSY NO., REV. LEVEL, AND LOC. CODE IN AREA SHOWN. MARK PER CDC SPEC 10121508, CHARACTER HEIGHT .12 (12PT) COLOR WHITE.
2. MARK SERIAL NO. IN AREA SHOWN PER CDC STD. 1.31.025 AND CDC SPEC 10121508, .12 HEIGHT, COLOR WHITE.
3. CAPACITOR C88 NOT USED.
4. FIND NUMBERS, ELEMENT IDENTIFIERS, AND REFERENCE DESIGNATIONS ARE FOR REFERENCE ONLY AND DO NOT APPEAR ON PART.
5. SWITCH CONTACTS ARE CLOSED WHEN TOGGLE TOWARD TOP OF BOARD IS DEPRESSED.
6. APPLY 9AUD IN AREA SHOWN. MARK PER CDC SPEC 10121508, CHARACTER HEIGHT .12 (12PT) COLOR WHITE.
7. PERMANENT REWORK SHALL CONFORM TO CDC SPEC 16019500.

REVISION RECORD						
REV	ECO	DESCRIPTION	DRFT	DATE	CHKD	APP
A	[illegible]	RELEASED CLASS "A"	[illegible]	[illegible]	[illegible]	[illegible]
B	13344	REVISED PER ECO	[illegible]	[illegible]	[illegible]	[illegible]
C	13581	REVISED PER ECO	[illegible]	[illegible]	[illegible]	[illegible]

APL 90446087	DETACHED LISTS	DO NOT SCALE DRAWING	
FIRST USED ON	CC555	DRWN	WJ HERMAN
TITLE	P.C. CARD ASSY, 9AUD (LOGIC MODULE)	CODE IDENT	15920
D	90446087	SCALE	NONE
SHEET	1 OF 1		

BUILD ARC 210

ASSEMBLY PARTS LIST

PRINT DATE 07-03-79 | PAGE 1 | FSE CHANGE NO. 00013581

DIV.	ASSEMBLY NUMBER	CD	REV.	DWG.	DESCRIPTION	MC	STATUS	STATUS DATE	ENG. RESP.	FILE DATE
0860	90446087	0	C	D	CD ASSY 9AUD LOG MOD	A	REL	02-02-79	CC555	07-03-79

I	FIND NO	LI	PART NUMBER	CD	M	QUANTITY	U/M	PART DESCRIPTION	MC	YLD	ECO NO. IN	ECO NO. OUT	S/N	WK IN	WK OUT
	001	01	90460763	7		1	PC	REPLACED BY 90446100 13403	P			13344			7936
	001	02	90446100	1		1	PC	PW BD MULTI USE	P		13344			7936	
	002	01	66299099	3		6	PC	IC 7400 TTL QUAD 2-IN NAND	P						
	003	01	66299100	9		3	PC	IC 7410 141 TTL3 3I/P NAND	P						
	004	01	66299102	5		2	PC	IC TTL DUAL 4-IN NAND	P						
	005	01	66299103	3		3	PC	IC 7402 148 TTL QUAD 2-IN NOR	P						
	006	01	39389700	4		4	PC	IC 7404 146-TTL HEX INVTR	P						
	007	01	88885700	0		1	PC	IC TYPE 7486TTL QUAD 2 I/P	P						
	008	01	51761500	1		9	PC	IC 74161/9316 158 TTL CNTR 6	P						
	009	01	88886400	6		6	PC	IC TYPE 74157 TTL QUAD 2I/P	P						
	010	01	50254300	2		1	PC	IC 74123 193 TTL 2 RETGR MVB	P						
	011	01	96744155	1		2	PC	IC 7406 DRVR HEX INV BUFFER	P						
	012	01	88897000	1		7	PC	IC 7408 201 TTL QUAD 2-IN AND	P						
	013	01	96744172	6		8	PC	IC 7432 218 TTL QUAD 2IN OR	P						
	014	01	88885400	7		15	PC	IC TYPE 9024 TTL DUAL FLIP FO	P						
	015	01	95814600	3		1	PC	IC 74160/9310 503 TTL UP DEC	P						
	016	01	66299110	8		2	PC	IC TTL 1 OF 10 DECODER	P						
	017	01	66299111	6		4	PC	IC TTL DUAL 4 TO 1 MUX	P						
	018	01	52342700	3		3	PC	IC 74191/9336 512 TTL 4B BIN	P						
	019	01	88882800	1		1	PC	IC 74174 519 TTL 6BIT D LATCH	P						
	020	01	15104500	2		3	PC	IC 74175 520 TTL 4 BIT D LTCH	P						

BUILD ARC 210

ASSEMBLY PARTS LIST

PRINT DATE 07-03-79 | PAGE 2 | FSE CHANGE NO. 00013581

DIV.	ASSEMBLY NUMBER	CD	REV.	DWG.	DESCRIPTION	MC	STATUS	STATUS DATE	ENG. RESP.	FILE DATE
0860	90446087	0	C	D	CD ASSY 9AUD LOG MOD	A	REL	02-02-79	CC555	07-03-79

I	FIND NO	LI	PART NUMBER	CD	M	QUANTITY	U/M	PART DESCRIPTION	MC	YLD	ECO NO. IN	ECO NO. OUT	S/N	WK IN	WK OUT
	021	01	15108600	6		4	PC	IC 7485 524 TTL 4B MGNTD CPTR	P						
	022	01	88923600	6		1	PC	IC TYPE 74164 TTL 8BIT	P						
	023	01	88923700	4		1	PC	IC TYPE 74165 TTL 8BIT	P						
	024	01	15105700	7		1	PC	IC 4024 582 TTL DL/V CONT MVB	P						
	025	01	51861706	3		1	PC	IC 256BIT 32X8 BP-ROM ASSY	Q						
	026	01	51861711	3		1	PC	IC 256BIT 32X8 BP-ROM ASSY	V						
	027	01	51861709	7		1	PC	IC 256BIT 32X8 BP-ROM ASSY	V						
	028	01	36186400	2		2	PC	IC MC1488 900 DTL QD LN DRVR	P						
	029	01	36186500	9		1	PC	IC MC1489 901 DTL QD LN RCVR	P						
	030	01	15125700	3		1	PC	IC TR1602A 941 MOS ASYN XCVR	P						
	031	01	88896100	0		1	PC	IC 7414 843 TTL HEX NAND RCVR	P						
	032	01	51892308	1		1	PC	IC 1024BIT 256X4 BP-ROM ASSY	V						
	033	01	51892309	9		1	PC	IC 1024BIT 256X4 BP-ROM ASSY	V						
	034	01	51892310	7		1	PC	IC 1024BIT 256X4 BP-ROM ASSY	V						
	035	01	51892311	5		1	PC	IC 1024BIT 256X4 BP-ROM ASSY	V						
	036	01	51892315	6		1	PC	IC 1024BIT 256X4 BP-ROM ASSY	V						
	037	01	51892313	1		1	PC	IC 1024BIT 256X4 BP-ROM ASSY	V						
	038	01	51892314	9		1	PC	IC 1024BIT 256X4 BP-ROM ASSY	V						
	039	01	15140300	3		14	PC	IC 2102A-4 772A MOS 1024B RAM	P						
	040	01	15144500	4		1	PC	IC SCM3750L 560 MOS 8192B ROM	P						
	041	01	15105600	9		1	PC	IC 4044 581 TTL PH/FREQ DETR	P						

BUILD ARC 210

ASSEMBLY PARTS LIST

PRINT DATE 07-03-79 | PAGE 3 | FILE CHANGE NO. 00013581

DIV.	ASSEMBLY NUMBER	CD	REV.	DWG.	DESCRIPTION	MC	STATUS	STATUS DATE	ENG. RESP.	FILE DATE
0860	90446087	0	C	D	CD ASSY 9AUD LOG MOD	A	REL	02-02-79	CC855	07-03-79

T	FIND NO.	LI	PART NUMBER	CD	M	QUANTITY	U/M	PART DESCRIPTION	MC	YLD	ECO. NO. IN	ECO. NO. OUT	S/N	WK IN	WK OUT
	045	01	51003059	6		1	PC	XSTR DD1 106 EPITAX NPN SIL	P						
	046	01	51887100	9		1	PC	XSTR TO-18 LOW LVL NPN SIL	P						
	049	01	51839147	9		9	PC	CAP FXD CER .100UF 10P 100VDC	P						
	050	01	24504369	0		1	PC	CAP FXD TANT 10UF 20P 15VDCW	P						
	051	01	51839142	0		2	PC	CAP FXD CER .033UF 10P 100VDC	P						
	052	01	51879105	8		4	PC	CAP FXD TANT 100UF 10P 6VDCW	P						
	053	01	24504317	9		1	PC	CAP FXD TANT .1UF 20P 35VDCW	P						
	054	01	24504322	9		1	PC	CAP FXD TANT 47UF 20P 6VDCW	P						
	055	01	51839119	8		4	PC	CAP FXD CER 390PF 10P 100VDC	P						
	056	01	51001120	8		62	PC	CAP CER F-Z .01UF +80-20P 25V	P						
	057	01	51786437	7		8	PC	CAP SOLID TANT 33UF 20P 15V	P						
	058	01	24504312	0		1	PC	CAP FXD TANT 6.8UF 20P 6WVDC	P						
	060	01	94227216	2		1	PC	CAP DIP MICA 39PF 1PF 300VDCW	P						
	066	01	24500055	9		1	PC	RES FXD COMP 470 OHM 5P 1/4W	P						
	067	01	24500087	2		1	PC	RES FXD COMP 10K OHM 5P 1/4W	P						
	068	01	24500039	3		2	PC	RES FXD COMP 100 OHM 5P 1/4W	P						
	069	01	24500063	3		12	PC	RES FXD COMP 1000 OHM 5P 1/4W	P						
	070	01	24500079	9		2	PC	RES FXD COMP 4700 OHM 5P 1/4W	P						
	071	01	24500027	8		1	PC	RES FXD COMP 33 OHM 5P 1/4W	P						
	072	01	24500036	9		1	PC	RES FXD COMP 75 OHM 5P 1/4W	P						
	073	01	24500048	4		2	PC	RES FXD COMP 240 OHM 5P 1/4W	P						

BUILD ARC 210

ASSEMBLY PARTS LIST

PRINT DATE 07-03-79 | PAGE 4 | FILE CHANGE NO. 00013581

DIV.	ASSEMBLY NUMBER	CD	REV.	DWG.	DESCRIPTION	MC	STATUS	STATUS DATE	ENG. RESP	FILE DATE
0860	90446087	0	C	D	CD ASSY 9AUD LOG MOD	A	REL	02-02-79	CC555	07-03-79

T	FIND NO.	LI	PART NUMBER	CD	M	QUANTITY	U/M	PART DESCRIPTION	MC	YLD	ECO. NO. IN	ECO. NO. OUT	S/N	WK IN	WK OUT
	074	01	24500081	5		1	PC	RES FXD COMP 5600 OHM 5P 1/4W	P						
	075	01	24500073	2		2	PC	RES FXD COMP 2700 OHM 5P 1/4W	P						
	076	01	11705903	7		1	PC	RES FXD COMP 43K OHM 5P 1/4W	P						
	077	01	24500098	9		1	PC	RES FXD COMP 30K OHM 5P 1/4W	P						
	078	01	24500084	9		1	PC	RES FXD COMP 7500 OHM 5P 1/4W	P						
	080	01	62012906	4		2	PC	RES MOD DUAL 1K OHMS 125MW	P						
	081	01	62012920	5		2	PC	RES MOD DUAL 4.7K OHM 125MW	P						
	082	01	24500056	7		1	PC	RES FXD COMP 510 OHM 5P 1/4W	P						
	083	01	24500077	3		1	PC	RES FXD COMP 3900 OHM 5P 1/4W	P						
	084	01	11705908	6		1	PC	RES FXD COMP 68K OHM 5P 1/4W	P						
	085	01	24500071	6		1	PC	RES FXD COMP 2200 OHM 5P 1/4W	P						
	086	01	24500047	6		1	PC	RES FXD COMP 220 OHM 5P 1/4W	P						
	087	01	24500074	0		1	PC	RES FXD COMP 3000 OHM 5P 1/4W	P						
	088	01	94360292	0		2	PC	RES FXD FM 909 OHM 1P 1/4W	P						
	089	01	51007385	1		3	PC	DIO IN4148 10MA MICRO SIL 30V	P						
	090	01	15151500	4		1	PC	IC UA7800+5 3ST POS V RGLTR	P						
	091	01	51862504	1		3	PC	SW, PC BD TGL 8 IN-LINE SPST	P			13344			7936
	091	02	51862504	1		2	PC	SW, PC BD TGL 8 IN-LINE SPST	P		13344			7936	
	094	01	51904105	7		1	PC	OSC, TTL DIP 6.745MHZ 500MW	P						
	096	01	51848404	3		1	PC	SOCKET, IC 24 POS D-I-L TIN	P						
	097	01	71486102	8		8	PC	BUS, PWR 11.35LG W/POSTS CU	P						

BUILD ARC 210

ASSEMBLY PARTS LIST

PRINT DATE 07-03-79 | PAGE 5 | PRE CHANGE NO. 00013581

DIV.	ASSEMBLY NUMBER	CD	REV.	DWG.	DESCRIPTION	MC	STATUS	STATUS DATE	ENG. RESP.	FILE DATE
0860	90446087	0	C	D	CD ASSY 9AUD LOG MOD	A	REL	02-02-79	CC555	07-03-79

I	FIND NO	LI	PART NUMBER	CD	M	QUANTITY	U/M	PART DESCRIPTION	MC	YLD	ECO NO IN	ECO NO OUT	S/N	WK IN	WK OUT
	098	01	71486101	0		4	PC	BUS, PWR 3.6LG W/POSTS CU	P						
	099	01	51906111	3		1	PC	CONN, 9 PIN PC MTD GOLD FIG 3	P						
	101	01	95642805	6		500	FT	WIR SLD 24GA TINNED	W						
	102	01	10125801	0		1	PC	WSHR, NO.4 SPG LOCK STL ZP	B						
	103	01	10125103	1		1	PC	NUT, HEX 4-40 MSCR STL ZP	B						
	104	01	92780084	7		1	PC	MSCR PAN SLT 4-40X5/16 SST P	B						
	105	01	16006500	9		REF	PC	FABRICATION SPECIFICATION	D						
	106	01	10121508	8		REF	PC	MARKING, INK STP-STENCIL-S/C	D						
	107	01	16019500	4		REF	PC	REQ/INSTALLATION OF EXT CKTS	D						
	108	01	62201025	4		REF	PC	LOG DIAG	D						
	109	01	24500075	7		5	PC	RES FXD COMP 3300 OHM 5P 1/4W	P						
	110	01	94375102	4		3	PC	RES SSIP NTWK 3300 R 3P 1.0W	P						
	111	01	24500061	7		1	PC	RES FXD COMP 820 OHM 5P 1/4W	P						
	112	01	24500059	1		1	PC	RES FXD COMP 680 OHM 5P 1/4W	P						
	113	01	51892316	4		1	PC	IC 1024BIT 256X4 BP-ROM ASSY	V						
	114	01	94375109	9		1	PC	RES SSIP NTWK 1000 R 3P 1.0W	P						
	115	01	52629949	0		3	500 FT	WIR WW 30GA SLD WHT UL KYNAR	W			13344			7936
	115	02	52629949	0		2	FT	WIR WW 30GA SLD WHT UL KYNAR	W		13344	13581		7936	7936
	115	03	52629949	0		2	750 FT	WIR WW 30GA SLD WHT UL KYNAR	W		13581			7936	
	116	01	51862500	9		1	PC	SW, PC BD TGL 7 IN-LINE SPST	P		13344			7936	

BUILD ARC 210

ASSEMBLY PARTS LIST

PRINT DATE 07-03-79 | PAGE 6 | PRE CHANGE NO. 00013581

DIV 0860 | ASSEMBLY NUMBER 90446087 | CD 0 | REV. C | DWG. D | DESCRIPTION CD ASSY 9AUD LOG MOD | MC A | STATUS REL | STATUS DATE 02-02-79 | ENG. RESP. CC555 | FILE DATE 07-03-79

I	FIND NO	LI	PART NUMBER	CD	M	QUANTITY	U/M	PART DESCRIPTION	MC	YLD	ECO NO IN	ECO NO OUT	S/N	WK IN	WK OUT
								0104 TOTAL LINES							

7-82.4

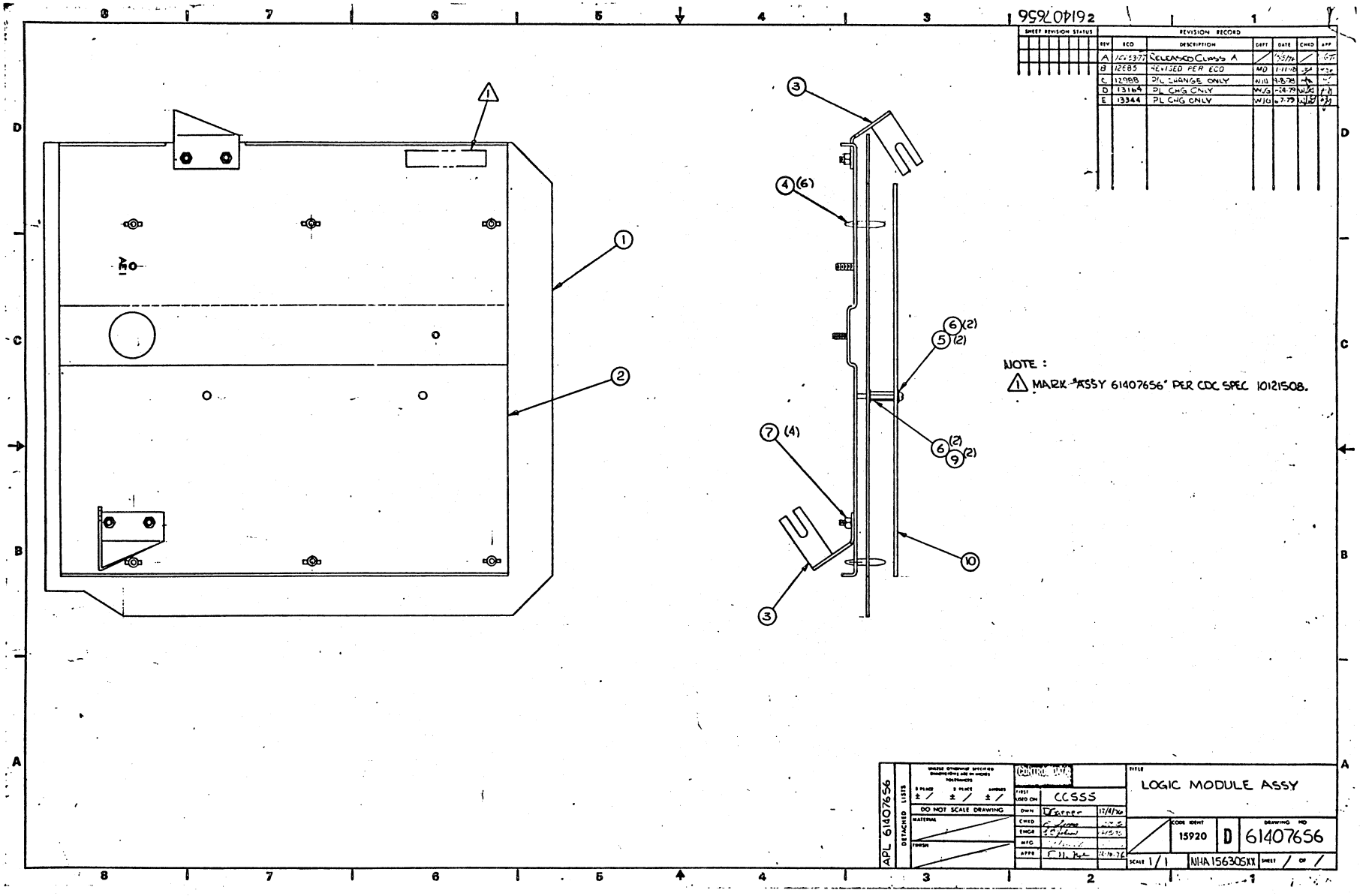

6295400 F

BUILD ARC 440

ASSEMBLY PARTS LIST

PRINT DATE 05-14-79 | PAGE 1 | PRE CHANGE NO 00013344

DIV.	ASSEMBLY NUMBER	CO	REV	DWG	DESCRIPTION	MC	STATUS	STATUS DATE	ENG. RESP.	PRE DATE
0860	61407656	U	E	D	LOGIC MODULE ASSY	N	REL	12-15-76	USE19502	05-14-79

FIND NO	LI	PART NUMBER	CD	M	QUANTITY	U/M	PART DESCRIPTION	MC	TLD	ECO NO. IN	ECO NO. OUT	E/M	WK IN	WK OUT
001	01	90460701	7		1	PC	REPLACED BY 90445941 12988	S			12988			7848
001	02	90445941	9		1	PC	REPLACED BY 90445992 13164	A		12988	13164		7848	7848
001	03	90445992	2		1	PC	REPLACED BY 90446086 13344	S		13164	13344		7848	7936
001	04	90446086	2		1	PC	PC CARD ASSY 9ATD	S		13344			7936	
002	01	71485900	6		1	PC	MOUNTING PLATE	P						
003	01	71488500	1		2	PC	BRACKET MTG PLATE	P						
004	01	51777300	8		6	PC	SPRT, CKT BD 3/16 NYL FIG 1	P						
005	01	10127104	7		2	PC	MSCR PAN PHL 4-40X.375 STL ZP	B						
006	01	10126400	0		4	PC	WSHR, NO.4 EXT/T LK STL ZP	B						
007	01	10122901	1		4	PC	NUT, HEX 6-32 TWIN-LKG STL	B						
009	01	51875304	1		2	PC	STDOFF, H-F HEX BHS 4-40X5/8	B						
010	01	71491829	9		1	PC	SHIELD(PWB ASSY)	P						
							0012 TOTAL LINES							

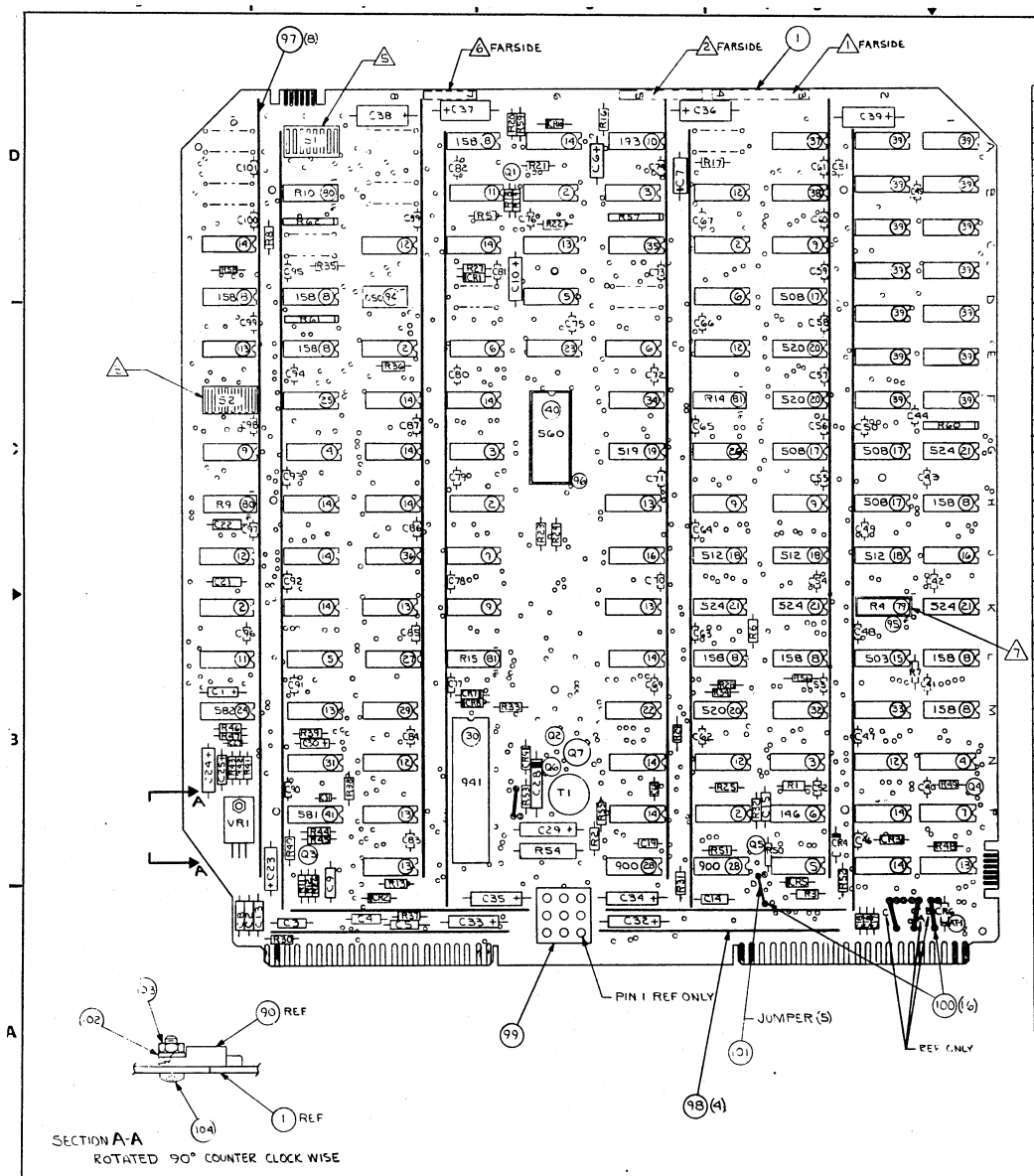

CROSS REFERENCE TABLE	
FIND NO.	REFERENCE DESIGNATION
42	Q7
43	Q2
44	Q6
45	Q1,Q4,Q5
46	Q3
47	C29
48	C28
49	C2,C3,C4,C5,C8,C14,C15 C21,C22
50	C24
51	C9,C13
52	C1,C6,C7,C23
53	C25
54	C10
55	C16,C17,C18,C19
56 (3)	C31,C40,C41,C42,C43 C44,C45,C46,C47,C48,C49 THRU87,89 THRU101
57	C32,C33,C34,C35,C36,C37,C38,C39
58	C30
60	C27
61	R54
62	R48,R49,R51,R55
63	R2,R3
64	R53
65	R33
66	R21,R52
67	R27,R50
68	R26,R30
69	R5,R6,R7,R8,R11,R12,R13,R25 R35,R36,R41,R45
70	R1,R37
71	R20
72	R18
73	R19,R22
74	R17
75	R31,R32
76	R23
77	R24
78	R16
79	R4 (7)
80	R9,R10
81	R14,R15
82	R38
83	R39
84	R40
85	R42
86	R43
87	R44
88	R46,R47
89	CR1,CR2,CR3,CR4,CR5 CR6,CR7,CR8,CR9,CR10
90	VR1
91	S1,S2
92	T1
93	AT-1
109	R28,R29,R34,R56
110	R57,R60,R61
111	R59
112	R58
114	R62

NOTES:

1. APPLY ASSY NO., REV. LEVEL, AND LOC CODE IN AREA SHOWN. MARK PER CDC SPEC 10121508; CHARACTER HEIGHT .12 (12PT) COLOR WHITE
2. MARK SERIAL NO. IN AREA SHOWN PER CDC STD 1.01.025 AND CDC SPEC 10121508, .12 HEIGHT, COLOR WHITE
3. CAPACITOR C88 NOT USED.
4. FIND NUMBERS, ELEMENT IDENTIFIERS, AND REFERENCE DESIGNATIONS ARE FOR REFERENCE ONLY AND DO NOT APPEAR ON PART
5. SWITCH CONTACTS ARE CLOSED WHEN TOGGLE TOWARD TOP OF BOARD IS DEPRESSED.
6. APPLY 6CVD-0 IN AREA SHOWN. MARK PER CDC SPEC 10121508; CHARACTER HEIGHT .12 (12PT) COLOR WHITE.
7. TEST SOCKET (FIND NO. 95) AND RESISTOR PACK (FIND NO. 79) LOCATED AT K2 NOT USED ON PC BLANK 90460763.

CHANGE TABLE	
DELETIONS	ADDITIONS

INACTIVE

SHEET REVISION STATUS	REVISION RECORD					
	REV	ECO	DESCRIPTION	DRFT	DATE	CHKD	APP
	-	—	RELEASED CLASS	WJN	12-1-76		
	A	[illegible]	[illegible]				
	B	12170	PL CHANGE ONLY	[illegible]	4-2-77	JH	
	C	CD 2756	REVISED PER ECO	[illegible]	[illegible]		
	D	CD12943	P/L CHG ONLY	W.G	6-29-78	[illegible]	
	E	12988	INACTIVE, SERVICE USE ONLY, SUPERSEDED BY 90445741	WJN	9-7-78	[illegible]	

APL 90460701

DETACHED LISTS

UNLESS OTHERWISE SPECIFIED DIMENSIONS ARE IN INCHES TOLERANCES
3 PLACE ± — 2 PLACE ± — ANGLES ± —
DO NOT SCALE DRAWING
MATERIAL
FINISH

FIRST USED ON	CC 555-C	
DWN	W. HERMAN	2-1-76
CHKD		
ENGR	[illegible]	
MFG		
APPR	[illegible]	12-6-76
MECH		

TITLE: P.C CARD ASSY 6CVD-C (LOGIC MODULE WITH CURRENT LOOP)

CODE IDENT 15920 | D | DRAWING NO 90460701

SCALE NONE | SHEET 1 OF 1

BUILD ARC 214

ASSEMBLY PARTS LIST

PRINT DATE 07-24-78 | PAGE 1 | FILE CHANGE NO 00012988

DIV	ASSEMBLY NUMBER	CD	REV	DWG	DESCRIPTION	MC	STATUS	STATUS DATE	ENG RESP	FILE DATE
0860	90460701	7	E	D	REPLACED BY 90445941 12988	S	INA	07-11-78	CC555	07-24-78

TRIND NO	LI	PART NUMBER	CD	M	QUANTITY	U M	PART DESCRIPTION	MC	YLD	ECO NO IN	ECO NO OUT	S/N	WK IN	WK OUT
001	01	90460533	4		1	PC	PC BD 6AQD-0 REFRESH BD	P			12756			7814
001	02	90460763	7		1	PC	PW BD MULTI USE	P		12756			7814	
002	01	88924400	0		6	PC	IC TYPE 7400 TTL QUAD 2-I/P	P			12170			7740
002	02	66299099	3		6	PC	IC TTL QUAD 2-IN NAND	P		12170			7740	
003	01	88898200	6		3	PC	IC TYPE 7410 TTL 3I/P POS	P			12170			7740
003	02	66299100	9		3	PC	IC TTL3 3I/P NAND PLASTIC	P		12170			7740	
004	01	66299102	5		2	PC	IC TTL DUAL 4-IN NAND	P						
005	01	88885500	4		3	PC	IC TYPE 7402 TTL QUAD NOR GA	P			12170			7740
005	02	66299103	3		3	PC	IC TTL QUAD 2-IN NOR	P		12170			7740	
006	01	88924500	7		4	PC	IC TYPE 7404 TTL HEX INVERTER	P			12170			7740
006	02	39389700	4		4	PC	IC 7404 TTL QUAD 2 1/P	P		12170			7740	
007	01	88885700	0		1	PC	IC TYPE 7486TTL QUAD 2 I/P	P						
008	01	51761500	1		9	PC	IC 74161/9316 158 TTL CNTR 6	P						
009	01	88886400	6		6	PC	IC TYPE 74157 TTL QUAD 2I/P	P						
010	01	50254300	2		1	PC	IC 74123 1o3 TTL 2 RETGR MVB	P						
011	01	96744155	1		2	PC	IC 7406 DRVR HEX INV BUFFER	P						
012	01	88897000	1		7	PC	IC TYPE 7408 TTL QUAD 2I/P	P						
013	01	96744172	6		8	PC	IC 7432 21a TTL QUAD 2IN OR	P						
014	01	88885400	7		15	PC	IC TYPE 9024 TTL DUAL FLIP FO	P						
015	01	95814600	3		1	PC	IC 74160/9310 503 TTL UP DEC	P						
016	01	66299110	8		2	PC	IC TTL 1 OF 10 DECODER	P						
017	01	66299111	6		4	PC	IC TTL DUAL 4 TO 1 MUX	P						
018	01	52342700	3		3	PC	IC 74191/9336 512 TTL 4R BIN	P						

BUILD ARC 214

ASSEMBLY PARTS LIST

PRINT DATE 07-24-78 | PAGE 2 | FILE CHANGE NO 00012988

DIV	ASSEMBLY NUMBER	CD	REV	DWG	DESCRIPTION	MC	STATUS	STATUS DATE	ENG RESP	FILE DATE
0860	90460701	7	E	D	REPLACED BY 90445941 12988	S	INA	07-11-78	CC555	07-24-78

TRIND NO	LI	PART NUMBER	CD	M	QUANTITY	U M	PART DESCRIPTION	MC	YLD	ECO NO IN	ECO NO OUT	S/N	WK IN	WK OUT
019	02	88882800	1		1	PC	IC 74174 519 TTL 6BIT D LATCH	P		12200-13			7727	
020	01	15104500	2		3	PC	IC 74175 520 TTL 4 BIT D LTCH	P						
021	01	15108600	6		4	PC	IC 7485 524 TTL 4B MGNTD CPTR	P						
022	01	88923600	6		1	PC	IC TYPE 74164 TTL 8BIT	P						
023	01	88923700	4		1	PC	IC TYPE 74165 TTL 8BIT	P						
024	01	15105700	7		1	PC	IC 4024 589 TTL DL/V CONT MVB	P						
025	01	51861706	3		1	PC	IC 256BIT 32X8 BP-ROM ASSY	G						
026	01	51861711	3		1	PC	IC 256BIT 32X8 BP-ROM ASSY	V						
027	01	51861709	7		1	PC	IC 256BIT 32X8 BP-ROM ASSY	V						
028	01	36186400	2		2	PC	IC MC1488 900 DTL QD LN DRVR	P						
029	01	66299116	5		1	PC	IC TTL QUAD LINE RECEIVER	P			12170			7740
029	02	36186500	9		1	PC	IC MC1489 901 DTL QD LN RCVR	P		12170			7740	
030	01	15125700	3		1	PC	IC TR1602A 941 MOS ASYN XCVR	P						
031	01	88896100	0		1	PC	IC 7414 RCVR TTL HEX NAND	P						
032	01	51892308	1		1	PC	IC 1024BIT 256X4 BP-ROM ASSY	V						
033	01	51892309	9		1	PC	IC 1024BIT 256X4 BP-ROM ASSY	V						
034	01	51892310	7		1	PC	IC 1024BIT 256X4 BP-ROM ASSY	V						
035	01	51892311	5		1	PC	IC 1024BIT 256X4 BP-ROM ASSY	V						
036	01	51892315	6		1	PC	IC 1024BIT 256X4 BP-ROM ASSY	V						
037	01	51892313	1		1	PC	IC 1024BIT 256X4 BP-ROM ASSY	V						
038	01	51892314	9		1	PC	IC 1024BIT 256X4 BP-ROM ASSY	V						

BUILD ARC 214

ASSEMBLY PARTS LIST

PRINT DATE	PAGE	FILE CHANGE NO.
07-24-78	3	00012988

DIV.	ASSEMBLY NUMBER	CD	REV.	DWG.	DESCRIPTION	MC	STATUS	STATUS DATE	ENG. RESP.	FILE DATE
0860	90460701	7	E	D	REPLACED BY 90445941 12988	S	INA	07-11-78	CC555	07-24-78

T	FIND NO	LI	PART NUMBER	CD	M	QUANTITY	U/M	PART DESCRIPTION	MC	YLD	ECO. NO. IN	ECO. NO. OUT	S/N	WK IN	WK OUT
	039	01	15140300	3		14	PC	IC 2102A-4 772A MOS 1024B RAM	P						
	040	01	15144500	4		1	PC	IC SCM3750L 560 MOS 8192B ROM	P						
	041	01	15105600	9		1	PC	IC 4044 5BI TTL PH/FREQ DETR	P						
	042	01	51681100	7		1	PC	XSTR 2N5189 NPN SIL	P						
	043	01	51003092	7		1	PC	XSTR 2N2222 HI SPEED NPN SIL	P						
	044	01	51714000	0		1	PC	XSTR 2N2907 PNP SIL	P						
	045	01	51003059	6		3	PC	XSTR DD1 106 EPITAX NPN SIL	P						
	046	01	51887100	9		1	PC	XSTR TO-18 LOW LVL NPN SIL	P						
	047	01	24504373	2		1	PC	CAP FXD TANT 47UF 20P 15VDCW	P						
	048	01	24506809	3		1	PC	CAP FXD MYL .022UF 10P 100V	P						
	049	01	51839147	9		9	PC	CAP FXD CER .1UF 10P 100VDCW	P						
	050	01	24504369	0		1	PC	CAP FXD TANT 10UF 20P 15VDCW	P						
	051	01	51839142	0		2	PC	CAP FXD CER .033UF 100V 10P	P						
	052	01	51879105	8		4	PC	CAP FXD TANT 100UF 10P 6VDCW	P						
	053	01	24504317	9		1	PC	CAP FXD TANT .1UF 20P 35VDCW	P						
	054	01	24504322	9		1	PC	CAP FXD TANT 47UF 20P 6VDCW	P						
	055	01	51839119	8		4	PC	CAP FXD CER 390PF 10P 100VDCW	P						
	056	01	51001119	0		62	PC	CAP CER BY PASS .01MFD 25WVDC	P			12943			7831
	056	02	51001120	8		62	PC	CAP CER .01UF 25VDCW	P		12943			7831	
	057	01	51786437	7		8	PC	CAP SOLID TANT 33UF 20P 15V	P						
	058	01	24504312	0		1	PC	CAP FXD TANT 6.8UF 20P 6WVDC	P						

BUILD ARC 214

ASSEMBLY PARTS LIST

PRINT DATE	PAGE	FILE CHANGE NO.
07-24-78	4	00012988

DIV.	ASSEMBLY NUMBER	CD	REV.	DWG.	DESCRIPTION	MC	STATUS	STATUS DATE	ENG. RESP.	FILE DATE
0860	90460701	7	E	D	REPLACED BY 90445941 12988	S	INA	07-11-78	CC555	07-24-78

T	FIND NO	LI	PART NUMBER	CD	M	QUANTITY	U/M	PART DESCRIPTION	MC	YLD	ECO. NO. IN	ECO. NO. OUT	S/N	WK IN	WK OUT
	060	01	94227216	2		1	PC	CAP DIP MICA 39PF 1PF 300VDCW	P						
	061	01	24504817	8		1	PC	RES FXD COMP 12 OHM 5P 2WATT	P						
	062	01	24500065	8		4	PC	RES COMP 1.2K OHM 1/4W 5P	P						
	063	01	24500051	8		2	PC	RES COMP 330 OHM 1/4W 5P	P						
	064	01	24500043	5		1	PC	RES COMP 150 OHM 1/4W 5P	P						
	065	01	17705914	4		1	PC	RES FXD COMP 0.12MEG .25W 5P	P						
	066	01	24500055	9		2	PC	RES COMP 470 OHM 1/4W 5P	P						
	067	01	24500087	2		2	PC	RES COMP 10K OHM 1/4W 5P	P						
	068	01	24500039	3		2	PC	RES COMP 100 OHM 1/4W 5P	P						
	069	01	24500063	3		12	PC	RES COMP 1K OHM 1/4W 5P	P						
	070	01	24500079	9		2	PC	RES COMP 4.7K OHM 1/4W 5P	P						
	071	01	24500027	8		1	PC	RES COMP 33 OHM 1/4W 5P	P						
	072	01	24500036	9		1	PC	RES COMP 75 OHM 1/4W 5P	P						
	073	01	24500048	4		2	PC	RES COMP 240 OHM 1/4W 5P	P						
	074	01	24500081	5		1	PC	RES COMP 5.6K OHM 1/4W 5P	P						
	075	01	24500073	2		2	PC	RES COMP 2.7K OHM 1/4W 5P	P						
	076	01	17705903	7		1	PC	RES FXD COMP 43K OHM .25W 5P	P						
	077	01	24500098	9		1	PC	RES COMP 30K OHM 1/4W 5P	P						
	078	01	24500084	9		1	PC	RES COMP 7.5K OHM 1/4W 5P	P						
	079	01	62012900	7		1	PC	RES MOD DUAL 56 OHMS 125MW	P			12756			7814
	080	01	62012906	4		2	PC	RES MOD DUAL 1K OHMS 125MW	P						

BUILD ARC 214

ASSEMBLY PARTS LIST

PRINT DATE	PAGE	FILE CHANGE NO.
07-24-78	5	00012988

DIV.	ASSEMBLY NUMBER	CD	REV.	DWG.	DESCRIPTION	MC	STATUS	STATUS DATE	ENG. RESP.	FILE DATE
0860	90460701	7	E	D	REPLACED BY 90445941 12988	S	INA	07-11-78	CC555	07-24-78

T	FIND NO	LI	PART NUMBER	CD	M	QUANTITY	U/M	PART DESCRIPTION	MC	YLD	ECO. NO. IN	ECO. NO. OUT	S/N	WK IN	WK OUT
	081	01	62012920	5		2	PC	RES MOD DUAL 4.7K OHM 125MW	P						
	082	01	24500056	7		1	PC	RES COMP 510 OHM 1/4W 5P	P						
	083	01	24500077	3		1	PC	RES COMP 3.9K OHM 1/4W 5P	P						
	084	01	17705908	6		1	PC	RES FXD COMP 68K OHM .25W 5P	P						
	085	01	24500071	6		1	PC	RES COMP 2.2K OHM 1/4W 5P	P						
	086	01	24500047	6		1	PC	RES COMP 220 OHM 1/4W 5P	P						
	087	01	24500074	0		1	PC	RES COMP 3K OHM 1/4W 5P	P						
	088	01	94360292	0		2	PC	RES FXD FILM 9090HMS 1/4W 1P	P						
	089	01	51001239	6		10	PC	REPLACED BY 51007385 12937	P			12937			7840
	089	02	51007385	1		10	PC	DIO MICRO SIL 30V 10MA	P		12937			7840	
	090	01	15151500	4		1	PC	IC UA7800+5 357A POS V RGLTR	P						
	091	01	51862504	1		2	PC	SW, PC BD TGL 8 IN-LINE SPST	P						
	092	01	30001000	6		1	PC	PULSE TRANSFORMER	P						
	093	01	51825700	1		1	PC	OPTICAL ISOLATOR	P						
	094	01	51904105	7		1	PC	OSCILLATOR TTL DIP(6.745 MHZ)	P						
	095	01	51848401	9		1	PC	SOCKET, IC 16 POS DL-IN-LINE	P			12756			7814
	096	01	51848404	3		1	PC	SOCKET, IC 24 POS DL-IN-LINE	P						
	097	01	71486102	8		8	PC	BUS, PWR 11.35LG W/POSTS CU	P						
	098	01	71486101	0		4	PC	BUS, PWR 3.6LG W/POSTS CU	P						
	099	01	51906111	3		1	PC	CONN, 9 PIN PC MTD GOLD FIG 3	P						
	100	01	65832100	5		16	PC	SOCKET MINI SPRING	P						

BUILD ARC 214

ASSEMBLY PARTS LIST

PRINT DATE	PAGE	FILE CHANGE NO.
07-24-78	6	00012988

DIV.	ASSEMBLY NUMBER	CD	REV.	DWG.	DESCRIPTION	MC	STATUS	STATUS DATE	ENG. RESP.	FILE DATE
0860	90460701	7	E	D	REPLACED BY 90445941 12988	S	INA	07-11-78	CC555	07-24-78

T	FIND NO	LI	PART NUMBER	CD	M	QUANTITY	U/M	PART DESCRIPTION	MC	YLD	ECO. NO. IN	ECO. NO. OUT	S/N	WK IN	WK OUT
	101	01	95642805	6		500	FT	WIR SLD 24GA TINNED	W						
	102	01	10125801	0		1	PC	WSHR NO.4 SPG LOCK STL CP	B						
	103	01	10125103	1		1	PC	NUT, HEX MSCR 4-40 STL CP/ZP	B						
	104	01	92780084	7		1	PC	SCR PAN HD SLT 4-40X5/16	B						
	105	01	16006500	9		REF	PC	FABRICATION SPECIFICATION	D						
	106	01	10121508	5		REF	PC	MARKING METHODS (SILK-SC,ETC)	D						
	107	01	16019500	4		REF	PC	REQ/INSTALLATION OF EXT CKTS	D						
	108	01	90460532	6		REF	PC	SCH DIAG 6ABD-0 MET LOG BASIC	D						
	109	01	24500075	7		4	PC	RES COMP 3.3K OHM 1/4W 5P	P						
	110	01	94375102	4		3	PC	RES 8PIN NTWK 3.3K 3P 1/8W	P						
	111	01	24500061	7		1	PC	RES COMP 820 OHM 1/4W 5P	P						
	112	01	24500059	1		1	PC	RES COMP 680 OHM 1/4W 5P	P						
	113	01	51892316	4		1	PC	IC 1024BIT 256X4 BP-ROM ASSY	V						
	114	01	94375109	9		1	PC	RES MOD 1K OHMS 125MW	P						
	115	01	52629949	0		1	500 FT	WIR WW 30GA SLD WHT UL KYNAR	W						
								0122 TOTAL LINES							

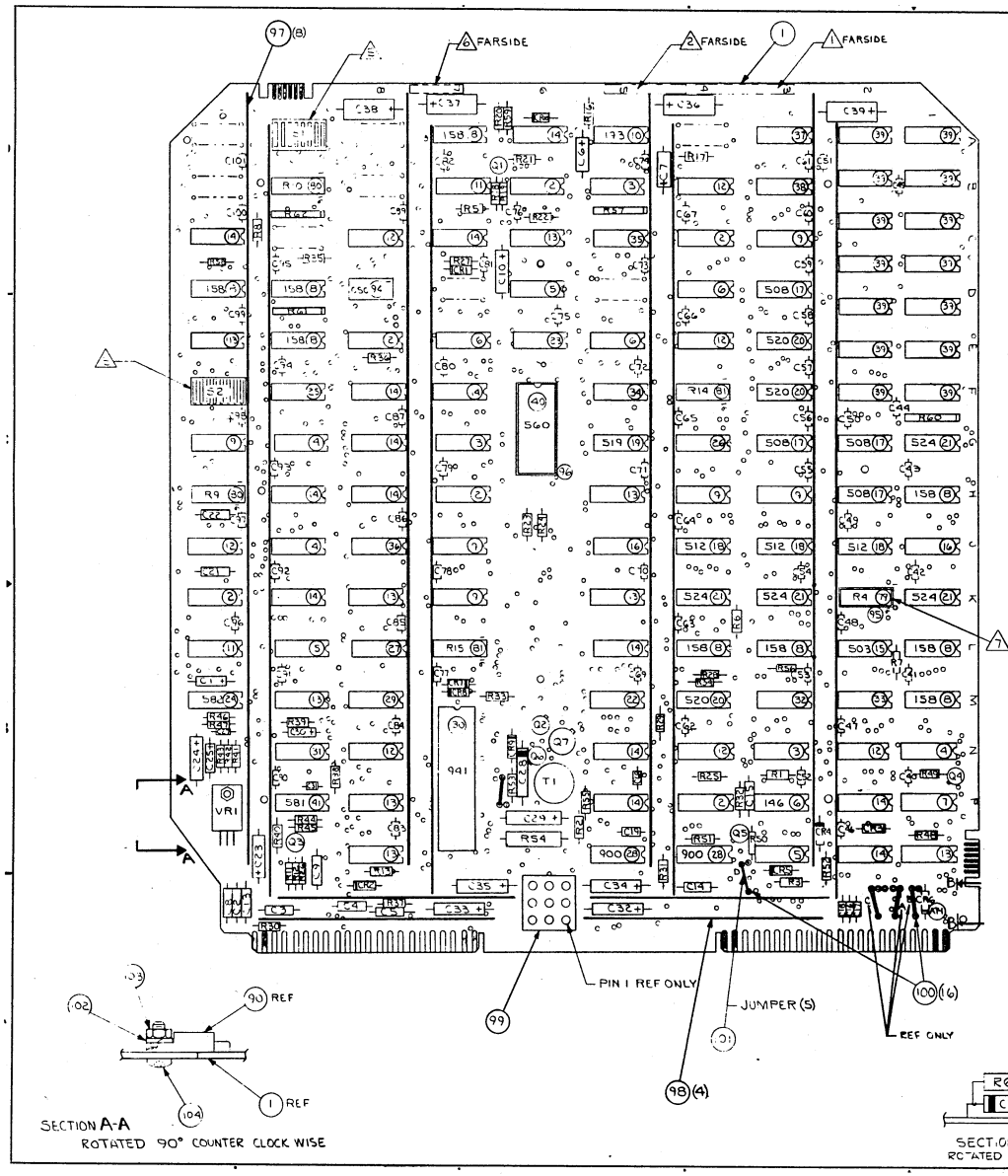

CROSS REFERENCE TABLE	
FIND NO.	REFERENCE DESIGNATION
42	Q7
43	Q2
44	Q6
45	Q1,Q4,Q5
46	Q3
47	C29
48	C28
49	C2,C3,C4,C5,C8,C14,C15 C21,C22
50	C24
51	C9,C13
52	C1,C6,C7,C23
53	C25
54	C10
55	C16,C17,C18,C19
56 (3)	C31,C40,C41,C42,C43 C44,C45,C46,C47,C48,C49 THRU87,89 THRU101
57	C32,C33,C34,C35,C36,C37,C38,C39
58	C30
60	C27
61	R54
62	R48,R49,R51,R55
63	R2,R3
64	R53
65	R33
66	R21,R52
67	R27,R50
68	R26,R30
69	R5,R6,R7,R8,R11,R12,R13,R25 R35,R36,R41,R45
70	R1,R37
71	R20
72	R18
73	R19,R22
74	R17
75	R31,R32
76	R23
77	R24
78	R16
79	R4 (7)
80	R9,R10
81	R14,R15
82	R38
83	R39
84	R40
85	R42
86	R43,R63
87	R44
88	R46,R47
89	CR1,CR2,CR3,CR4,CR5, CR6,CR7,CR8,CR9,CR10
90	VR1
91	S1,S2
92	T1
93	AT-1
109	R28,R29,R34,R56
110	R57,R60,R61
111	R59
112	R58
114	R62

SHEET REVISION STATUS	REVISION RECORD					
	REV	ECO	DESCRIPTION	DEPT	DATE	CHKD	APP
	A	[illegible]	RELEASED CLASS "A"	[illegible]	[illegible]		[illegible]
	B	2993	PL CHG ONLY	[illegible]	[illegible]	[illegible]	
	C	5059	P/L CHG ONLY	W.U	6-5-78	[illegible]	[illegible]
	D	13164	ACTIVE- SUPERSEDED BY 6445558	W.G	1-4-79	[illegible]	[illegible]

NOTES:

1. APPLY ASSY NO., REV. LEVEL, AND LOC. CODE IN AREA SHOWN. MARK PER CDC SPEC 10121508; CHARACTER HEIGHT .12 (12PT) COLOR WHITE.
2. MARK SERIAL NO. IN AREA SHOWN PER CDC STD. 1.01.025 AND CDC SPEC 10121508, .12 HEIGHT, COLOR WHITE.
3. CAPACITOR C88 NOT USED.
4. FIND NUMBERS, ELEMENT IDENTIFIERS, AND REFERENCE DESIGNATIONS ARE FOR REFERENCE ONLY AND DO NOT APPEAR ON PART.
5. SWITCH CONTACTS ARE CLOSED WHEN TOGGLE TOWARD TOP OF BOARD IS DEPRESSED.
6. APPLY 6CVD-1 IN AREA SHOWN, MARK PER CDC SPEC 10121508; CHARACTER HEIGHT .12 (12PT), COLOR WHITE.
7. TEST SOCKET (FIND NO. 95) AND RESISTOR PACK (FIND NO. 79) LOCATED AT K2 NOT USED ON PC BLANK 90460763.

CHANGE TABLE	
DELETIONS	ADDITIONS

INACTIVE

APL 90445941

DETACHED LISTS

UNLESS OTHERWISE SPECIFIED DIMENSIONS ARE IN INCHES TOLERANCES 3 PLACE ± — 2 PLACE ± — ANGLES ± —

DO NOT SCALE DRAWING

MATERIAL

FINISH

FIRST USED ON CC555-C

DWN W.J. HERMAN 5-11-78

CHKD [illegible]

ENGR [illegible] 6-21-78

MFG [illegible] 6-26-78

APPR [illegible] 6-23-78

MECH [illegible]

TITLE P.C CARD ASSY 6CVD-1 (LOGIC MODULE WITH CURRENT LOOP)

CODE IDENT 15920 D DRAWING NO 90445941

SCALE NONE SHEET 1 OF 1

BUILD ARC 214

ASSEMBLY PARTS LIST

PRINT DATE	PAGE	FILE CHANGE NO.
12-28-78	1	00013164

DIV.	ASSEMBLY NUMBER	CD	REV.	DWG.	DESCRIPTION	MC	STATUS	STATUS DATE	ENG. RESP.	FILE DATE
0860	90445941	9	D	D	REPLACED BY 90445992 13164	A	INA	11-09-78	CC555	12-28-78

T	FIND NO	LI	PART NUMBER	CD	M	QUANTITY	U/M	PART DESCRIPTION	MC	YLD	ECO. NO. IN	ECO. NO. OUT	S/N	WK IN	WK OUT
	001	01	90460763	7		1	PC	PW BD MULTI USE	P						
	002	01	66299099	3		6	PC	IC 7400 TTL QUAD 2-IN NAND	P						
	003	01	66299100	9		3	PC	IC TTL3 3I/P NAND PLASTIC	P						
	004	01	66299102	5		2	PC	IC TTL DUAL 4-IN NAND	P						
	005	01	66299103	3		3	PC	IC TTL QUAD 2-IN NOR	P						
	006	01	39389700	4		4	PC	IC 7404 TTL QUAD 2 1/P	P						
	007	01	88885700	0		1	PC	IC TYPE 7486TTL QUAD 2 I/P	P						
	008	01	51761500	1		9	PC	IC 74161/9316 158 TTL CNTR 6	P						
	009	01	88886400	6		6	PC	IC TYPE 74157 TTL QUAD 2I/P	P						
	010	01	50254300	2		1	PC	IC 74123 193 TTL 2 RETGR MVB	P						
	011	01	96744155	1		2	PC	IC 7406 DRVR HEX INV BUFFER	P						
	012	01	88897000	1		7	PC	IC TYPE 7408 TTL QUAD 2I/P	P						
	013	01	96744172	6		8	PC	IC 7432 218 TTL QUAD 2IN OR	P						
	014	01	88885400	7		15	PC	IC TYPE 9024 TTL DUAL FLIP FO	P						
	015	01	95814600	3		1	PC	IC 74160/9310 503 TTL UP DEC	P						
	016	01	66299110	8		2	PC	IC TTL 1 OF 10 DECODER	P						
	017	01	66299111	6		4	PC	IC TTL DUAL 4 TO 1 MUX	P						
	018	01	52342700	3		3	PC	IC 74191/9336 512 TTL 4B BIN	P						
	019	01	88882800	1		1	PC	IC 74174 519 TTL 6BIT D LATCH	P						
	020	01	15104500	2		3	PC	IC 74175 520 TTL 4 BIT D LTCH	P						
	021	01	15108600	6		4	PC	IC 7485 524 TTL 4B MGNTD CPTR	P						

BUILD ARC 214

ASSEMBLY PARTS LIST

PRINT DATE	PAGE	FILE CHANGE NO.
12-28-78	2	00013164

DIV.	ASSEMBLY NUMBER	CD	REV.	DWG.	DESCRIPTION	MC	STATUS	STATUS DATE	ENG. RESP.	FILE DATE
0860	90445941	9	D	D	REPLACED BY 90445992 13164	A	INA	11-09-78	CC555	12-28-78

T	FIND NO	LI	PART NUMBER	CD	M	QUANTITY	U/M	PART DESCRIPTION	MC	YLD	ECO. NO. IN	ECO. NO. OUT	S/N	WK IN	WK OUT
	022	01	88923600	6		1	PC	IC TYPE 74164 TTL 8BIT	P						
	023	01	88923700	4		1	PC	IC TYPE 74165 TTL 8BIT	P						
	024	01	15105700	7		1	PC	IC 4024 582 TTL DL/V CONT MVB	P						
	025	01	51861706	3		1	PC	IC 256BIT 32X8 BP-ROM ASSY	G						
	026	01	51861711	3		1	PC	IC 256BIT 32X8 BP-ROM ASSY	V						
	027	01	51861709	7		1	PC	IC 256BIT 32X8 BP-ROM ASSY	V						
	028	01	36186400	2		2	PC	IC MC1488 900 DTL QD LN DRVR	P						
	029	01	36186500	9		1	PC	IC MC1489 901 DTL QD LN RCVR	P						
	030	01	15125700	3		1	PC	IC TR1602A 941 MOS ASYN XCVR	P						
	031	01	88896100	0		1	PC	IC 7414 RCVR TTL HEX NAND	P						
	032	01	51892308	1		1	PC	IC 1024BIT 256X4 BP-ROM ASSY	V						
	033	01	51892309	9		1	PC	IC 1024BIT 256X4 BP-ROM ASSY	V						
	034	01	51892310	7		1	PC	IC 1024BIT 256X4 BP-ROM ASSY	V						
	035	01	51892311	5		1	PC	IC 1024BIT 256X4 BP-ROM ASSY	V						
	036	01	51892315	6		1	PC	IC 1024BIT 256X4 BP-ROM ASSY	V						
	037	01	51892313	1		1	PC	IC 1024BIT 256X4 BP-ROM ASSY	V						
	038	01	51892314	9		1	PC	IC 1024BIT 256X4 BP-ROM ASSY	V						
	039	01	15140300	3		14	PC	IC 2102A-4 772A MOS 1024B RAM	P						
	040	01	15144500	4		1	PC	IC SCM3750L 560 MOS 8192B ROM	P						
	041	01	15105600	9		1	PC	IC 4044 581 TTL PH/FREQ DETR	P						
	042	01	51681100	7		1	PC	XSTR 2N5189 NPN SIL	P						

BUILD ARC 214

ASSEMBLY PARTS LIST

PRINT DATE	PAGE	FILE CHANGE NO.
12-28-78	3	00013164

DIV.	ASSEMBLY NUMBER	CD	REV.	DWG.	DESCRIPTION	MC	STATUS	STATUS DATE	ENG. RESP.	FILE DATE
0860	90445941	9	D	D	REPLACED BY 90445992 13164	A	INA	11-09-78	CC555	12-28-78

T	FIND NO	LI	PART NUMBER	CD	M	QUANTITY	U/M	PART DESCRIPTION	MC	YLD	ECO. NO. IN	ECO. NO. OUT	S/N	WK IN	WK OUT
	043	01	51003092	7		1	PC	XSTR 2N2222 HI SPEED NPN SIL	P						
	044	01	51714000	0		1	PC	XSTR 2N2907 PNP SIL	P						
	045	01	51003059	6		3	PC	XSTR DD1 106 EPITAX NPN SIL	P						
	046	01	51887100	9		1	PC	XSTR TO-18 LOW LVL NPN SIL	P						
	047	01	24504373	2		1	PC	CAP FXD TANT 47UF 20P 15VDCW	P						
	048	01	24506809	3		1	PC	CAP FXD MYL .022UF 10P 100V	P						
	049	01	51839147	9		9	PC	CAP FXD CER .100UF 10P 100VDC	P						
	050	01	24504369	0		1	PC	CAP FXD TANT 10UF 20P 15VDCW	P						
	051	01	51839142	0		2	PC	CAP FXD CER .033UF 10P 100VDC	P						
	052	01	51879105	8		4	PC	CAP FXD TANT 100UF 10P 6VDCW	P						
	053	01	24504317	9		1	PC	CAP FXD TANT .1UF 20P 35VDCW	P						
	054	01	24504322	9		1	PC	CAP FXD TANT 47UF 20P 6VDCW	P						
	055	01	51839119	8		4	PC	CAP FXD CER 390PF 10P 100VDC	P						
	056	01	51001120	8		62	PC	CAP CER .01UF 25VDCW	P						
	057	01	51786437	7		8	PC	CAP SOLID TANT 33UF 20P 15V	P						
	058	01	24504312	0		1	PC	CAP FXD TANT 6.8UF 20P 6WVDC	P			13059			7840
	058	02	24504325	2		1	PC	CAP FXD TANT .47UF 20P 35VDCW	P		13059			7840	
	060	01	94227216	2		1	PC	CAP DIP MICA 39PF 1PF 300VDCW	P						
	061	01	24504817	8		1	PC	RES FXD COMP 12 OHM 5P 2WATT	P						
	062	01	24500065	8		4	PC	RES FXD COMP 1200 OHM 5P 1/4W	P						
	063	01	24500051	8		2	PC	RES FXD COMP 330 OHM 5P 1/4W	P						

BUILD ARC 214

ASSEMBLY PARTS LIST

PRINT DATE	PAGE	FILE CHANGE NO.
12-28-78	4	00013164

DIV.	ASSEMBLY NUMBER	CD	REV.	DWG.	DESCRIPTION	MC	STATUS	STATUS DATE	ENG. RESP.	FILE DATE
0860	90445941	9	D	D	REPLACED BY 90445992 13164	A	INA	11-09-78	CC555	12-28-78

T	FIND NO	LI	PART NUMBER	CD	M	QUANTITY	U/M	PART DESCRIPTION	MC	YLD	ECO. NO. IN	ECO. NO. OUT	S/N	WK IN	WK OUT
	064	01	24500043	5		1	PC	RES FXD COMP 150 OHM 5P 1/4W	P						
	065	01	17705914	4		1	PC	RES FXD COMP 120K OHM 5P 1/4W	P						
	066	01	24500055	9		2	PC	RES FXD COMP 470 OHM 5P 1/4W	P						
	067	01	24500087	2		2	PC	RES FXD COMP 10K OHM 5P 1/4W	P						
	068	01	24500039	3		2	PC	RES FXD COMP 100 OHM 5P 1/4W	P						
	069	01	24500063	3		12	PC	RES FXD COMP 1000 OHM 5P 1/4W	P						
	070	01	24500079	9		2	PC	RES FXD COMP 4700 OHM 5P 1/4W	P						
	071	01	24500027	8		1	PC	RES FXD COMP 33 OHM 5P 1/4W	P						
	072	01	24500036	9		1	PC	RES FXD COMP 75 OHM 5P 1/4W	P						
	073	01	24500048	4		2	PC	RES FXD COMP 240 OHM 5P 1/4W	P						
	074	01	24500081	5		1	PC	RES FXD COMP 5600 OHM 5P 1/4W	P						
	075	01	24500073	2		2	PC	RES FXD COMP 2700 OHM 5P 1/4W	P						
	076	01	17705903	7		1	PC	RES FXD COMP 43K OHM 5P 1/4W	P						
	077	01	24500098	9		1	PC	RES FXD COMP 30K OHM 5P 1/4W	P						
	078	01	24500084	9		1	PC	RES FXD COMP 7500 OHM 5P 1/4W	P						
	079	01	62012900	7		1	PC	RES MOD DUAL 56 OHMS 125MW	P						
	080	01	62012906	4		2	PC	RES MOD DUAL 1K OHMS 125MW	P						
	081	01	62012920	5		2	PC	RES MOD DUAL 4.7K OHM 125MW	P						
	082	01	24500056	7		1	PC	RES FXD COMP 510 OHM 5P 1/4W	P						
	083	01	24500077	3		1	PC	RES FXD COMP 3900 OHM 5P 1/4W	P						
	084	01	17705908	6		1	PC	RES FXD COMP 68K OHM 5P 1/4W	P						

BUILD ARC 214

ASSEMBLY PARTS LIST

PRINT DATE	PAGE	FILE CHANGE NO.
12-28-78	5	00013164

DIV.	ASSEMBLY NUMBER	CD	REV.	DWG.	DESCRIPTION	MC	STATUS	STATUS DATE	ENG. RESP.	FILE DATE
0860	90445941	9	D	D	REPLACED BY 90445992 13164	A	INA	11-09-78	CC555	12-28-78

T	FIND NO	LI	PART NUMBER	CD	M	QUANTITY		U/M	PART DESCRIPTION	MC	YLD	ECO. NO. IN	ECO. NO. OUT	S/N	WK IN	WK OUT
	085	01	24500071	6		1		PC	RES FXD COMP 220Ω OHM 5P 1/4W	P						
	086	01	24500047	6		2		PC	RES FXD COMP 220 OHM 5P 1/4W	P						
	087	01	24500074	0		1		PC	RES FXD COMP 3000 OHM 5P 1/4W	P						
	088	01	94360292	0		2		PC	RES FXD FM 909 OHM 1P 1/4W	P						
	089	01	51001239	6		10		PC	REPLACED BY 51007385 12937	P						
	090	01	15151500	4		1		PC	IC UA7800+5 357A POS V RGLTR	P						
	091	01	51862504	1		2		PC	SW, PC BD TGL 8 IN-LINE SPST	P						
	092	01	30001000	6		1		PC	XFMR, PULSE COUPLING MEM DRVR	P						
	093	01	51825700	1		1		PC	OPTICAL ISOLATOR	P			12988			7848
	093	02	95791300	7		1		PC	IC 4N26 OPT COUPLED ISOLATOR	P		12988	13164A		7848	7848
	093	03	51825700	1		1		PC	OPTICAL ISOLATOR	P		13164A			7848	
	094	01	51904105	7		1		PC	OSC, TTL DIP 6.745MHZ 500MW	P						
	095	01	51848401	9		1		PC	SOCKET, IC 16 POS DL-IN-LINE	P						
	096	01	51848404	3		1		PC	SOCKET, IC 24 POS DL-IN-LINE	P						
	097	01	71486102	8		8		PC	BUS, PWR 11.35LG W/POSTS CU	P						
	098	01	71486101	0		4		PC	BUS, PWR 3.6LG W/POSTS CU	P						
	099	01	51906111	3		1		PC	CONN, 9 PIN PC MTD GOLD FIG 3	P						
	100	01	65832100	5		16		PC	SOCKET MINI SPRING	P						
	101	01	95642805	6			500	FT	WIR SLD 24GA TINNED	W						
	102	01	10125801	0		1		PC	WSHR, SPG LOCK NO.4 STL C/ZP	B						
	103	01	10125103	1		1		PC	NUT, HEX MSCR 4-40 STL CP/ZP	B						
	104	01	92780084	7		1		PC	SCR PAN HD SLT 4-40X5/16	B						

BUILD ARC 214

ASSEMBLY PARTS LIST

PRINT DATE	PAGE	FILE CHANGE NO.
12-28-78	6	00013164

DIV.	ASSEMBLY NUMBER	CD	REV.	DWG.	DESCRIPTION	MC	STATUS	STATUS DATE	ENG. RESP.	FILE DATE
0860	90445941	9	D	D	REPLACED BY 90445992 13164	A	INA	11-09-78	CC555	12-28-78

T	FIND NO	LI	PART NUMBER	CD	M	QUANTITY		U/M	PART DESCRIPTION	MC	YLD	ECO. NO. IN	ECO. NO. OUT	S/N	WK IN	WK OUT
	105	01	16006500	9		REF		PC	FABRICATION SPECIFICATION	D						
	106	01	10121508	5		REF		PC	MARKING METHODS (SILK-SC,ETC)	D						
	107	01	16019500	4		REF		PC	REQ/INSTALLATION OF EXT CKTS	D						
	108	01	90460532	6		REF		PC	SCH DIAG 6ABD-0 MET LOG BASIC	D						
	109	01	24500075	7		4		PC	RES FXD COMP 3300 OHM 5P 1/4W	P						
	110	01	94375102	4		3		PC	RES 8PIN SIP 3.3K OHM 3P 1/8W	P						
	111	01	24500061	7		1		PC	RES FXD COMP 820 OHM 5P 1/4W	P						
	112	01	24500059	1		1		PC	RES FXD COMP 680 OHM 5P 1/4W	P						
	113	01	51892316	4		1		PC	IC 1024BIT 256X4 BP-ROM ASSY	V						
	114	01	94375109	9		1		PC	RES 8PIN SIP 1K OHM 3P 1/8W	P						
	115	01	52629949	0		1	500	FT	WIR WW 30GA SLD WHT UL KYNAR	W						
									0117 TOTAL LINES							

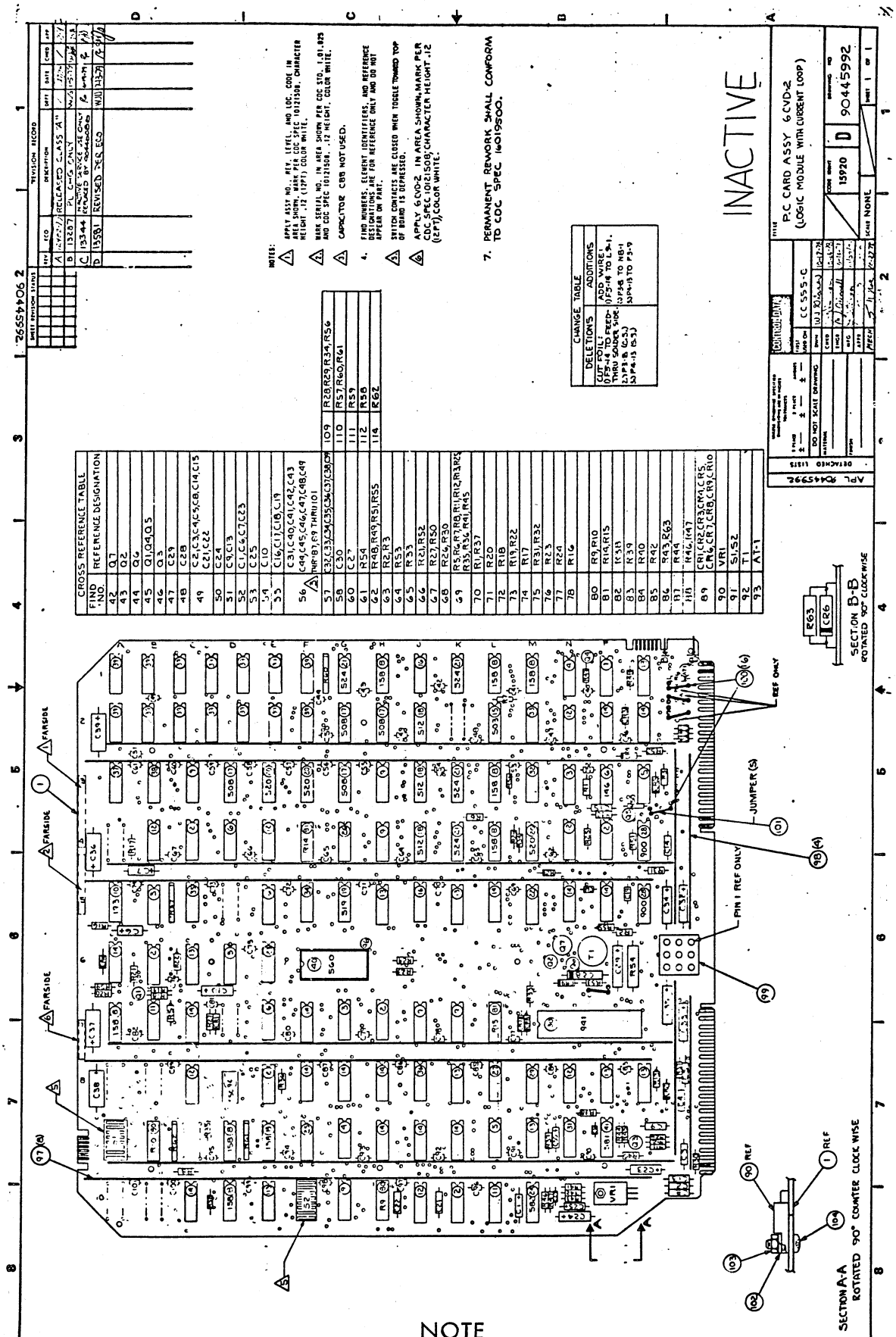

NOTE

6CVD-2 REPLACED BY 9ATD CARD,
PART NUMBER 90446086

BUILD ARC 214

ASSEMBLY PARTS LIST

PRINT DATE 07-05-79 | PAGE 1 | FRE CHANGE NO 00013581

DIV	ASSEMBLY NUMBER	CO	REV	DWG	DESCRIPTION	MC	STATUS	STATUS DATE	ENG RESP	FRE DATE
0860	90445992	2	D	D	REPLACED BY 90446086 13344	S	INA	05-04-79		07-03-79

T	FIND NO	LI	PART NUMBER	CO	M	QUANTITY	U/M	PART DESCRIPTION	MC	YLD	ECO NO IN	ECO NO OUT	S/N	WE IN	WE OUT
	001	01	90460763	7		1	PC	REPLACED BY 90446100 13403	P						
	002	01	66299099	3		6	PC	IC 7400 TTL QUAD 2-IN NAND	P						
	003	01	66299100	9		3	PC	IC 7410 141 TTL3 3I/P NAND	P						
	004	01	66299102	5		2	PC	IC TTL DUAL 4-IN NAND	P						
	005	01	66299103	3		3	PC	IC 7402 148 TTL QUAD 2-IN NOR	P						
	006	01	39389700	4		4	PC	IC 7404 146-TTL HEX INVTR	P						
	007	01	88885700	0		1	PC	IC TYPE 7486TTL QUAD 2 I/P	P						
	008	01	51761500	1		9	PC	IC 74161/9316 158 TTL CNTR 6	P						
	009	01	88886400	6		6	PC	IC TYPE 74157 TTL QUAD 2I/P	P						
	010	01	50254300	2		1	PC	IC 74123 193 TTL 2 RETGR MVB	P						
	011	01	96744155	1		2	PC	IC 7406 DRVR HEX INV BUFFER	P						
	012	01	88897000	1		7	PC	IC 7408 201 TTL QUAD 2-IN AND	P						
	013	01	96744172	6		8	PC	IC 7432 218 TTL QUAD 2IN OR	P						
	014	01	88885400	7		15	PC	IC TYPE 9024 TTL DUAL FLIP FO	P						
	015	01	95814600	3		1	PC	IC 74160/9310 503 TTL UP DEC	P						
	016	01	66299110	8		2	PC	IC TTL 1 OF 10 DECODER	P						
	017	01	66299111	6		4	PC	IC TTL DUAL 4 TO 1 MUX	P						
	018	01	52342700	3		3	PC	IC 74191/9336 512 TTL 4B BIN	P						
	019	01	88882800	1		1	PC	IC 74174 519 TTL 6BIT D LATCH	P						
	020	01	15104500	2		3	PC	IC 74175 520 TTL 4 BIT D LTCH	P						
	021	01	15108600	6		4	PC	IC 7485 524 TTL 4B MGNID CPTR	P						

BUILD ARC 214

ASSEMBLY PARTS LIST

PRINT DATE 07-05-79 | PAGE 2 | FRE CHANGE NO 00013581

DIV	ASSEMBLY NUMBER	CO	REV	DWG	DESCRIPTION	MC	STATUS	STATUS DATE	ENG RESP	FRE DATE
0860	90445992	2	D	D	REPLACED BY 90446086 13344	S	INA	05-04-79		07-03-79

T	FIND NO	LI	PART NUMBER	CO	M	QUANTITY	U/M	PART DESCRIPTION	MC	YLD	ECO NO IN	ECO NO OUT	S/N	WE IN	WE OUT
	022	01	88923600	6		1	PC	IC TYPE 74164 TTL 8BIT	P						
	023	01	88923700	4		1	PC	IC TYPE 74165 TTL 8BIT	P						
	024	01	15105700	7		1	PC	IC 4024 582 TTL DL/V CONT MVB	P						
	025	01	51861706	3		1	PC	IC 256BIT 32X8 BP-ROM ASSY	G						
	026	01	51861711	3		1	PC	IC 256BIT 32X8 BP-ROM ASSY	V						
	027	01	51861709	7		1	PC	IC 256BIT 32X8 BP-ROM ASSY	V						
	028	01	36186400	2		2	PC	IC MC1488 900 DTL QD LN DRVR	P						
	029	01	36186500	9		1	PC	IC MC1489 901 DTL QD LN RCVR	P						
	030	01	15125700	3		1	PC	IC TR1602A 941 MOS ASYN XCVR	P						
	031	01	88896100	0		1	PC	IC 7414 843 TTL HEX NAND RCVR	P						
	032	01	51892308	1		1	PC	IC 1024BIT 256X4 BP-ROM ASSY	V						
	033	01	51892309	9		1	PC	IC 1024BIT 256X4 BP-ROM ASSY	V						
	034	01	51892310	7		1	PC	IC 1024BIT 256X4 BP-ROM ASSY	V						
	035	01	51892311	5		1	PC	IC 1024BIT 256X4 BP-ROM ASSY	V						
	036	01	51892315	6		1	PC	IC 1024BIT 256X4 BP-ROM ASSY	V						
	037	01	51892313	1		1	PC	IC 1024BIT 256X4 BP-ROM ASSY	V						
	038	01	51892314	9		1	PC	IC 1024BIT 256X4 BP-ROM ASSY	V						
	039	01	15140300	3		14	PC	IC 2102A-4 772A MOS 1024B RAM	P						
	040	01	15144500	4		1	PC	IC SCM3750L 560 MOS 8192B ROM	P						
	041	01	15105600	9		1	PC	IC 4044 581 TTL PH/FREQ DETR	P						
	042	01	51681100	7		1	PC	XSTR 2N5189 NPN SIL	P						

BUILD ARC 214

ASSEMBLY PARTS LIST

PRINT DATE 07-05-79 | PAGE 3 | PRE CHANGE NO 00013581

DIV	ASSEMBLY NUMBER	CD	REV.	DWG	DESCRIPTION	MC	STATUS	STATUS DATE	ENG RESP	PRE DATE
0860	90445992	2	D	D	REPLACED BY 90446086 13344	S	INA	05-04-79		07-03-79

T	FIND NO	LI	PART NUMBER	CD	M	QUANTITY	U/M	PART DESCRIPTION	MC	YLD	ECO NO IN	ECO NO OUT	S/N	WK IN	WK OUT
	043	01	51003092	7		1	PC	XSTR 2N2222 HI SPEED NPN SIL	P						
	044	01	51714000	0		1	PC	XSTR 2N2907 PNP SIL	P						
	045	01	51003059	6		3	PC	XSTR DD1 106 EPITAX NPN SIL	P						
	046	01	51887100	9		1	PC	XSTR TO-18 LOW LVL NPN SIL	P						
	047	01	24504373	2		1	PC	CAP FXD TANT 47UF 20P 15VDCW	P						
	048	01	24506809	3		1	PC	CAP FXD MYL .022UF 10P 100V	P						
	049	01	51839147	9		9	PC	CAP FXD CER .100UF 10P 100VDC	P						
	050	01	24504369	0		1	PC	CAP FXD TANT 10UF 20P 15VDCW	P						
	051	01	51839142	0		2	PC	CAP FXD CER .033UF 10P 100VDC	P						
	052	01	51879105	8		4	PC	CAP FXD TANT 100UF 10P 6VDCW	P						
	053	01	24504317	9		1	PC	CAP FXD TANT .1UF 20P 35VDCW	P						
	054	01	24504322	9		1	PC	CAP FXD TANT 47UF 20P 6VDCW	P						
	055	01	51839119	8		4	PC	CAP FXD CER 390PF 10P 100VDC	P						
	056	01	51001120	8		62	PC	CAP CER F-2 .01UF +80-20P 25V	P						
	057	01	51786437	7		8	PC	CAP SOLID TANT 33UF 20P 15V	P						
	058	01	24504325	2		1	PC	CAP FXD TANT .47UF 20P 35VDCW	P						
	060	01	94227216	2		1	PC	CAP DIP MICA 39PF 1PF 300VDCW	P						
	061	01	24504817	8		1	PC	RES FXD COMP 12 OHM 5P 2WATT	P						
	062	01	24500065	8		4	PC	RES FXD COMP 1200 OHM 5P 1/4W	P						
	063	01	24500051	8		2	PC	RES FXD COMP 330 OHM 5P 1/4W	P						
	064	01	24500043	5		1	PC	RES FXD COMP 150 OHM 5P 1/4W	P						

BUILD ARC 214

ASSEMBLY PARTS LIST

PRINT DATE 07-05-79 | PAGE 4 | PRE CHANGE NO 00013581

DIV	ASSEMBLY NUMBER	CD	REV.	DWG	DESCRIPTION	MC	STATUS	STATUS DATE	ENG RESP	PRE DATE
0860	90445992	2	D	D	REPLACED BY 90446086 13344	S	INA	05-04-79		07-03-79

T	FIND NO	LI	PART NUMBER	CD	M	QUANTITY	U/M	PART DESCRIPTION	MC	YLD	ECO NO IN	ECO NO OUT	S/N	WK IN	WK OUT
	065	01	17705914	4		1	PC	RES FXD COMP 120K OHM 5P 1/4W	P						
	066	01	24500055	9		2	PC	RES FXD COMP 470 OHM 5P 1/4W	P						
	067	01	24500087	2		2	PC	RES FXD COMP 10K OHM 5P 1/4W	P						
	068	01	24500039	3		2	PC	RES FXD COMP 100 OHM 5P 1/4W	P						
	069	01	24500063	3		12	PC	RES FXD COMP 1000 OHM 5P 1/4W	P						
	070	01	24500079	9		2	PC	RES FXD COMP 4700 OHM 5P 1/4W	P						
	071	01	24500027	8		1	PC	RES FXD COMP 33 OHM 5P 1/4W	P						
	072	01	24500036	9		1	PC	RES FXD COMP 75 OHM 5P 1/4W	P						
	073	01	24500048	4		2	PC	RES FXD COMP 240 OHM 5P 1/4W	P						
	074	01	24500081	5		1	PC	RES FXD COMP 5600 OHM 5P 1/4W	P						
	075	01	24500073	2		2	PC	RES FXD COMP 2700 OHM 5P 1/4W	P						
	076	01	17705903	7		1	PC	RES FXD COMP 43K OHM 5P 1/4W	P						
	077	01	24500098	9		1	PC	RES FXD COMP 30K OHM 5P 1/4W	P						
	078	01	24500084	9		1	PC	RES FXD COMP 7500 OHM 5P 1/4W	P						
	080	01	62012906	4		2	PC	RES MOD DUAL 1K OHMS 125MW	P						
	081	01	62012920	5		2	PC	RES MOD DUAL 4.7K OHM 125MW	P						
	082	01	24500056	7		1	PC	RES FXD COMP 510 OHM 5P 1/4W	P						
	083	01	24500077	3		1	PC	RES FXD COMP 3900 OHM 5P 1/4W	P						
	084	01	17705908	6		1	PC	RES FXD COMP 68K OHM 5P 1/4W	P						
	085	01	24500071	6		1	PC	RES FXD COMP 2200 OHM 5P 1/4W	P						
	086	01	24500047	6		2	PC	RES FXD COMP 220 OHM 5P 1/4W	P						

BUILD ARC 214

ASSEMBLY PARTS LIST

PRINT DATE 07-05-79 | PAGE 5 | PRE CHANGE NO 00013581

DIV.	ASSEMBLY NUMBER	CD	REV.	DWG.	DESCRIPTION	MC	STATUS	STATUS DATE	ENG RESP	FILE DATE
0860	90445992	2	D	D	REPLACED BY 90446086 13344	S	INA	05-04-79		07-03-79

T	FIND NO	LI	PART NUMBER	CD	M	QUANTITY	U/M	PART DESCRIPTION	MC	VLD	ECO NO IN	ECO NO OUT	S/N	WK IN	WK OUT
	087	01	24500074	0		1	PC	RES FXD COMP 3000 OHM 5P 1/4W	P						
	088	01	94360292	0		2	PC	RES FXD FH 909 OHM 1P 1/4W	P						
	089	01	51001239	6		10	PC	REPLACED BY 51007385 12937	P						
	090	01	15151500	4		1	PC	IC UA7800+5 357A POS V RGLTR	P						
	091	01	51862504	1		2	PC	SW, PC BD TGL 8 IN-LINE SPST	P						
	092	01	30001000	6		1	PC	XFMR, PULSE COUPLING HEM DRVR	P						
	093	01	95791300	7		1	PC	IC 4N26 OPT COUPLED ISOLATOR	P			13287			7852
	093	02	51825700	1		1	PC	OPTICAL ISOLATOR	P		13287			7852	
	094	01	51904105	7		1	PC	OSC, TTL DIP 6.745MHZ 500HW	P						
	096	01	51848404	3		1	PC	SOCKET, IC 24 POS D-I-L TIN	P						
	097	01	71486102	8		0	PC	BUS, PWR 11.35LG W/POSTS CU	P						
	098	01	71486101	0		4	PC	BUS, PWR 3.6LG W/POSTS CU	P						
	099	01	51906111	3		1	PC	CONN, 9 PIN PC MTD GOLD FIG 3	P						
	100	01	65832100	5		16	PC	SOCKET MINI SPRING	P						
	101	01	95642805	6		500	FT	WIR SLD 24GA TINNED	W						
	102	01	10125801	0		1	PC	WSHR, NO.4 SPG LOCK STL ZP	B						
	103	01	10125103	1		1	PC	NUT, HEX 4-40 MSCR STL ZP	B						
	104	01	92780084	7		1	PC	MSCR PAN SLT 4-40X5/16 SST P	B						
	105	01	16006500	9		REF	PC	FABRICATION SPECIFICATION	D						
	106	01	10121508	5		REF	PC	MARKING, INK STP-STENCIL-B/C	D						
	107	01	16019500	4		REF	PC	REQ/INSTALLATION OF EXT CKTS	D						

BUILD ARC 214

ASSEMBLY PARTS LIST

PRINT DATE 07-05-79 | PAGE 6 | PRE CHANGE NO 00013581

DIV.	ASSEMBLY NUMBER	CD	REV.	DWG.	DESCRIPTION	MC	STATUS	STATUS DATE	ENG RESP	FILE DATE
0860	90445992	2	D	D	REPLACED BY 90446086 13344	S	INA	05-04-79		07-03-79

T	FIND NO	LI	PART NUMBER	CD	M	QUANTITY	U/M	PART DESCRIPTION	MC	VLD	ECO NO IN	ECO NO OUT	S/N	WK IN	WK OUT
	108	01	62201031	2		REF	PC	LOGIC DIAG	D						
	109	01	24500075	7		4	PC	RES FXD COMP 3300 OHM 5P 1/4W	P						
	110	01	94375102	4		3	PC	RES 8SIP NTWK 3300 R 3P 1.0W	P						
	111	01	24500061	7		1	PC	RES FXD COMP 820 OHM 5P 1/4W	P						
	112	01	24500059	1		1	PC	RES FXD COMP 680 OHM 5P 1/4W	P						
	113	01	51892316	4		1	PC	IC 1024BIT 256X4 BP-ROM ASSY	V						
	114	01	94375109	9		1	PC	RES 8SIP NTWK 1000 R 3P 1.0W	P						
	115	01	52629949	0		500	FT	WIR WW 30GA SLD WHT UL KYNAR	W			13581			7926
	116	02	52629949	0		1 250	FT	WIR WW 30GA SLD WHT UL KYNAR	W		13581			7926	
								0114 TOTAL LINES							

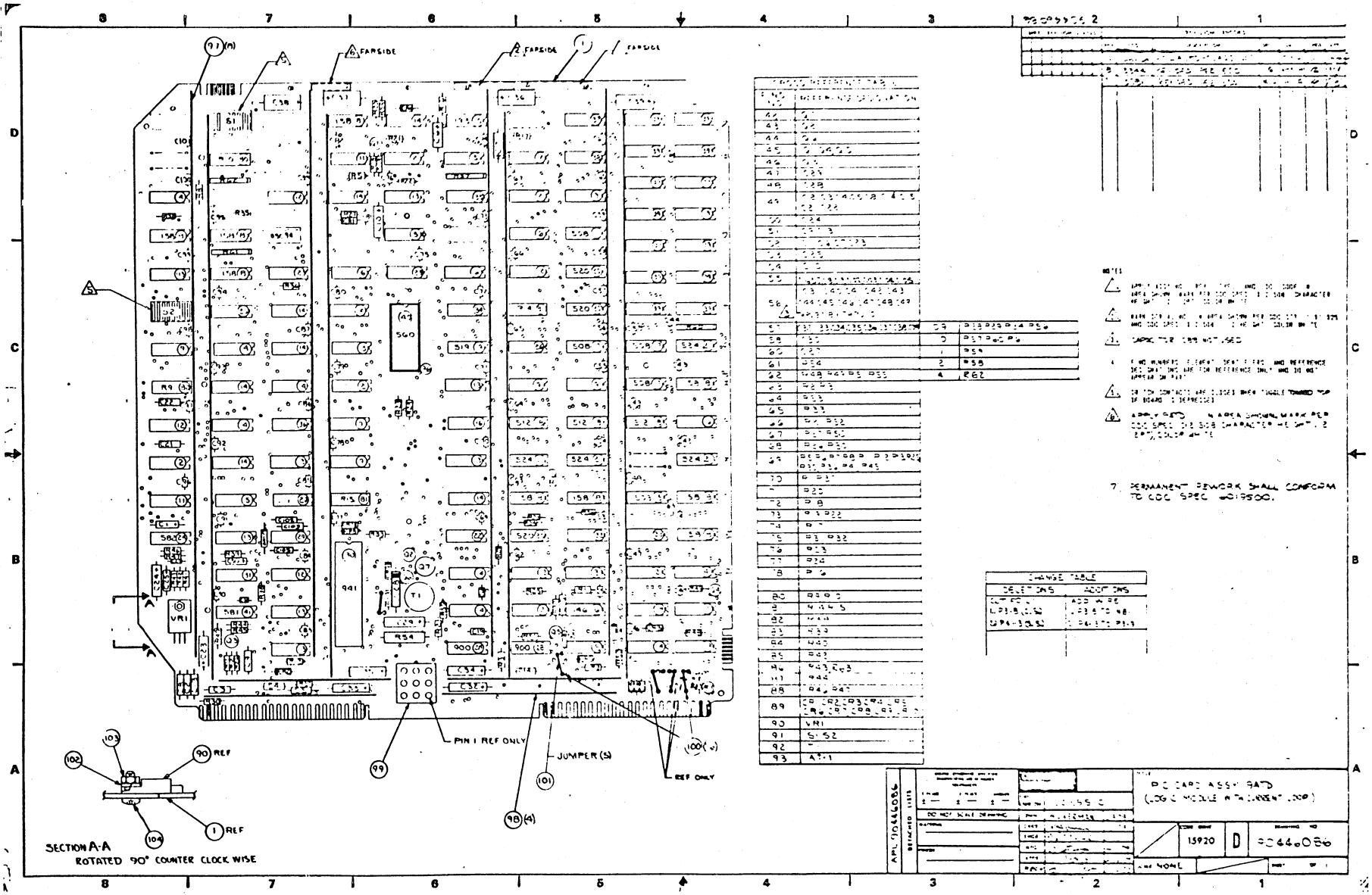
FARSIDE
FARSIDE
FARSIDE
PIN 1 REF ONLY
JUMPER (S)
REF ONLY
REF
REF
SECTION A-A
ROTATED 90° COUNTER CLOCK WISE

BUILD ARC 214

ASSEMBLY PARTS LIST

PRINT DATE 07-03-79 | PAGE 1 | PRE CHANGE NO. 00013581

DIV	ASSEMBLY NUMBER	CO	REV.	DWG.	DESCRIPTION	MK	STATUS	STATUS DATE	ENG. RESP	PRE DATE
0860	90446086	2	C	D	PC CARD ASSY 9ATD	S	REL	02-19-79	CC555C	07-03-79

T	FIND NO.	LI	PART NUMBER	CD	M	QUANTITY	U/M	PART DESCRIPTION	MK	TED	ECO NO. IN	ECO NO. OUT	S/N	WK IN	WK OUT
	001	01	90460763	7		1	PC	REPLACED BY 90446100 13403	P			13344			7936
	001	02	90446100	1		1	PC	PW BD MULTI USE	P		13344			7936	
	002	01	66299099	3		6	PC	IC 7400 TTL QUAD 2-IN NAND	P						
	003	01	66299100	9		3	PC	IC 7410 141 TTL3 3I/P NAND	P						
	004	01	66299102	5		2	PC	IC TTL DUAL 4-IN NAND	P						
	005	01	66299103	3		3	PC	IC 7402 148 TTL QUAD 2-IN NOR	P						
	006	01	39389700	4		4	PC	IC 7404 146-TTL HEX INVTR	P						
	007	01	88888700	0		1	PC	IC TYPE 7486TTL QUAD 2 I/P	P						
	008	01	51761500	1		9	PC	IC 74161/9316 158 TTL CNTR 6	P						
	009	01	88886400	6		6	PC	IC TYPE 74157 TTL QUAD 2I/P	P						
	010	01	50254300	2		1	PC	IC 74123 193 TTL 2 RETGR MVB	P						
	011	01	96744155	1		2	PC	IC 7406 DRVR HEX INV BUFFER	P						
	012	01	88897000	1		7	PC	IC 7408 201 TTL QUAD 2-IN AND	P						
	013	01	96744172	6		8	PC	IC 7432 218 TTL QUAD 2IN OR	P						
	014	01	88885400	7		15	PC	IC TYPE 9024 TTL DUAL FLIP FO	P						
	015	01	95814600	3		1	PC	IC 74160/9310 503 TTL UP DEC	P						
	016	01	66299110	8		2	PC	IC TTL 1 OF 10 DECODER	P						
	017	01	66299111	6		4	PC	IC TTL DUAL 4 TO 1 MUX	P						
	018	01	52342700	3		3	PC	IC 74191/9336 512 TTL 4B BIN	P						
	019	01	88882800	1		1	PC	IC 74174 519 TTL 6BIT D LATCH	P						
	020	01	15104500	2		3	PC	IC 74175 520 TTL 4 BIT D LTCH	P						

BUILD ARC 214

ASSEMBLY PARTS LIST

PRINT DATE 07-03-79 | PAGE 2 | PRE CHANGE NO. 00013581

DIV	ASSEMBLY NUMBER	CO	REV.	DWG.	DESCRIPTION	MK	STATUS	STATUS DATE	ENG. RESP	PRE DATE
0860	90446086	2	C	D	PC CARD ASSY 9ATD	S	REL	02-19-79	CC555C	07-03-79

T	FIND NO.	LI	PART NUMBER	CD	M	QUANTITY	U/M	PART DESCRIPTION	MK	TED	ECO NO. IN	ECO NO. OUT	S/N	WK IN	WK OUT
	021	01	15108600	6		4	PC	IC 7485 524 TTL 4B MGNTD CPTR	P						
	022	01	88923600	6		1	PC	IC TYPE 74164 TTL 8BIT	P						
	023	01	88923700	4		1	PC	IC TYPE 74165 TTL 8BIT	P						
	024	01	15105700	7		1	PC	IC 4024 582 TTL DL/V CONT MVB	P						
	025	01	51861709	3		1	PC	IC 256BIT 32X8 BP-ROM ASSY	0						
	026	01	51861711	3		1	PC	IC 256BIT 32X8 BP-ROM ASSY	V						
	027	01	51861709	7		1	PC	IC 256BIT 32X8 BP-ROM ASSY	V						
	028	01	36186400	2		2	PC	IC MC1488 900 DTL QD LN DRVR	P						
	029	01	36186500	9		1	PC	IC MC1489 901 DTL QD LN RCVR	P						
	030	01	15125700	3		1	PC	IC TR1602A 941 MOS ASYN XCVR	P						
	031	01	88896100	0		1	PC	IC 7414 843 TTL HEX NAND RCVR	P						
	032	01	51892308	1		1	PC	IC 1024BIT 256X4 BP-ROM ASSY	V						
	033	01	51892309	9		1	PC	IC 1024BIT 256X4 BP-ROM ASSY	V						
	034	01	51892310	7		1	PC	IC 1024BIT 256X4 BP-ROM ASSY	V						
	035	01	51892311	5		1	PC	IC 1024BIT 256X4 BP-ROM ASSY	V						
	036	01	51892315	6		1	PC	IC 1024BIT 256X4 BP-ROM ASSY	V						
	037	01	51892313	1		1	PC	IC 1024BIT 256X4 BP-ROM ASSY	V						
	038	01	51892314	9		1	PC	IC 1024BIT 256X4 BP-ROM ASSY	V						
	039	01	15140300	3		14	PC	IC 2102A-4 772A MOS 1024B RAM	P						
	040	01	15144500	4		1	PC	IC SCH3750L 560 MOS 8192B ROM	P						
	041	01	15105600	9		1	PC	IC 4044 581 TTL PH/FREQ DETR	P						

BUILD ARC 214

ASSEMBLY PARTS LIST

PRINT DATE 07-03-79 | PAGE 3 | PRE CHANGE NO. 00013581

DIV.	ASSEMBLY NUMBER	CD	REV.	DWG	DESCRIPTION	MC	STATUS	STATUS DATE	ENG. RESP.	FILE DATE
0860	90446086	2	C	D	PC CARD ASSY 9ATD	S	REL	02-19-79	CC555C	07-03-79

T	FIND NO	LI	PART NUMBER	CD	M	QUANTITY	U/M	PART DESCRIPTION	MC	YLD	ECO. NO. IN	ECO. NO. OUT	S/N	WK IN	WK OUT
	042	01	51681100	7		1	PC	XSTR 2N5189 NPN SIL	P						
	043	01	51003092	7		1	PC	XSTR 2N2222 HI SPEED NPN SIL	P						
	044	01	51714000	0		1	PC	XSTR 2N2907 PNP SIL	P						
	045	01	51003059	6		3	PC	XSTR D01 106 EPITAX NPN SIL	P						
	046	01	51887100	9		1	PC	XSTR TO-18 LOW LVL NPN SIL	P						
	047	01	24504373	2		1	PC	CAP FXD TANT 47UF 20P 15VDCW	P						
	048	01	24506809	3		1	PC	CAP FXD MYL .022UF 10P 100V	P						
	049	01	51839147	9		9	PC	CAP FXD CER .100UF 10P 100VDC	P						
	050	01	24504369	0		1	PC	CAP FXD TANT 10UF 20P 15VDCW	P						
	051	01	51839142	0		2	PC	CAP FXD CER .033UF 10P 100VDC	P						
	052	01	51879105	8		4	PC	CAP FXD TANT 100UF 10P 6VDCW	P						
	053	01	24504317	9		1	PC	CAP FXD TANT .1UF 20P 35VDCW	P						
	054	01	24504322	9		1	PC	CAP FXD TANT 47UF 20P 6VDCW	P						
	055	01	51839119	8		8	PC	CAP FXD CER 390PF 10P 100VDC	P						
	056	01	51001120	8		62	PC	CAP CER F=2 .01UF +80-20P 25V	P						
	057	01	51786437	7		8	PC	CAP SOLID TANT 33UF 20P 15V	P						
	058	01	24504325	2		1	PC	CAP FXD TANT .47UF 20P 35VDCW	P						
	060	01	94227216	2		1	PC	CAP DIP MICA 39PF 1PF 300VDCW	P						
	061	01	24504817	8		1	PC	RES FXD COMP 12 OHM 5P 2WATT	P						
	062	01	24500065	8		4	PC	RES FXD COMP 1200 OHM 5P 1/4W	P						
	063	01	24500051	8		2	PC	RES FXD COMP 330 OHM 5P 1/4W	P						

BUILD ARC 214

ASSEMBLY PARTS LIST

PRINT DATE 07-03-79 | PAGE 4 | PRE CHANGE NO. 00013581

DIV.	ASSEMBLY NUMBER	CD	REV.	DWG	DESCRIPTION	MC	STATUS	STATUS DATE	ENG. RESP.	FILE DATE
0860	90446086	2	C	D	PC CARD ASSY 9ATD	S	REL	02-19-79	CC555C	07-03-79

T	FIND NO	LI	PART NUMBER	CD	M	QUANTITY	U/M	PART DESCRIPTION	MC	YLD	ECO. NO. IN	ECO. NO. OUT	S/N	WK IN	WK OUT
	064	01	24500043	5		1	PC	RES FXD COMP 150 OHM 5P 1/4W	P						
	065	01	17705914	4		1	PC	RES FXD COMP 120K OHM 5P 1/4W	P						
	066	01	24500055	9		2	PC	RES FXD COMP 470 OHM 5P 1/4W	P						
	067	01	24500087	2		2	PC	RES FXD COMP 10K OHM 5P 1/4W	P						
	068	01	24500039	3		2	PC	RES FXD COMP 100 OHM 5P 1/4W	P						
	069	01	24500063	3		12	PC	RES FXD COMP 1000 OHM 5P 1/4W	P						
	070	01	24500079	9		2	PC	RES FXD COMP 4700 OHM 5P 1/4W	P						
	071	01	24500027	8		1	PC	RES FXD COMP 33 OHM 5P 1/4W	P						
	072	01	24500036	9		1	PC	RES FXD COMP 75 OHM 5P 1/4W	P						
	073	01	24500048	4		2	PC	RES FXD COMP 240 OHM 5P 1/4W	P						
	074	01	24500081	5		1	PC	RES FXD COMP 5600 OHM 5P 1/4W	P						
	075	01	24500073	2		2	PC	RES FXD COMP 2700 OHM 5P 1/4W	P						
	076	01	17705903	7		1	PC	RES FXD COMP 43K OHM 5P 1/4W	P						
	077	01	24500098	9		1	PC	RES FXD COMP 30K OHM 5P 1/4W	P						
	078	01	24500084	9		1	PC	RES FXD COMP 7500 OHM 5P 1/4W	P						
	080	01	62012906	4		2	PC	RES MOD DUAL 1K OHMS 125MW	P						
	081	01	62012920	5		2	PC	RES MOD DUAL 4.7K OHM 125MW	P						
	082	01	24500056	7		1	PC	RES FXD COMP 510 OHM 5P 1/4W	P						
	083	01	24500077	3		1	PC	RES FXD COMP 3900 OHM 5P 1/4W	P						
	084	01	17705908	6		1	PC	RES FXD COMP 68K OHM 5P 1/4W	P						
	085	01	24500071	6		1	PC	RES FXD COMP 2200 OHM 5P 1/4W	P						

BUILD ARC 214

ASSEMBLY PARTS LIST

PRINT DATE 07-03-79 | PAGE 5 | PRE CHANGE NO. 00013581

DIV.	ASSEMBLY NUMBER	CD	REV.	DWG.	DESCRIPTION	MC	STATUS	STATUS DATE	ENG. RESP	FILE DATE
0860	90446086	2	C	D	PC CARD ASSY 9ATD	S	REL	02-19-79	CC555C	07-03-79

T	FIND NO	LI	PART NUMBER	CD	M	QUANTITY	U/M	PART DESCRIPTION	MC	YLD	ECO. NO. IN	ECO NO. OUT	S/N	WK IN	WK OUT
	086	01	24500047	6		2	PC	RES FXD COMP 220 OHM 5P 1/4W	P						
	087	01	24500074	0		1	PC	RES FXD COMP 3000 OHM 5P 1/4W	P						
	088	01	94360292	0		2	PC	RES FXD FM 909 OHM 1P 1/4W	P						
	089	01	51001239	6		10	PC	REPLACED BY 51007385 12937	P						
	090	01	15151500	4		1	PC	IC UA7800+5 357A POS V RGLTR	P						
	091	01	51062504	1		2	PC	SW, PC BD TGL 8 IN-LINE SPST	P						
	092	01	30001000	6		1	PC	XFMR, PULSE COUPLING MEM DRVR	P						
	093	01	51825700	1		1	PC	OPTICAL ISOLATOR	P						
	094	01	51904105	7		1	PC	OSC, TTL DIP 6.745MHZ 500HW	P						
	096	01	51848404	3		1	PC	SOCKET, IC 24 POS D-I-L TIN	P						
	097	01	71486102	8		0	PC	BUS, PWR 11.35LG W/POSTS CU	P						
	098	01	71486101	0		4	PC	BUS, PWR 3.6LG W/POSTS CU	P						
	099	01	51906111	3		1	PC	CONN, 9 PIN PC MTD GOLD FIG 3	P						
	100	01	65832100	5		16	PC	SOCKET MINI SPRING	P						
	101	01	95642805	6		500	FT	WIR SLD 24GA TINNED	W						
	102	01	10125801	0		1	PC	WSHR, NO.4 SPG LOCK STL ZP	B						
	103	01	10125103	1		1	PC	NUT, HEX 4-40 HSCR STL ZP	B						
	104	01	92780084	7		1	PC	HSCR PAN SLT 4-40X5/16 SST P	B						
	105	01	16006500	9		REF	PC	FABRICATION SPECIFICATION	D						
	106	01	10121508	5		REF	PC	MARKING, INK STP-STENCIL-S/C	D						
	107	01	16019500	4		REF	PC	REQ/INSTALLATION OF EXT CKTS	D						

BUILD ARC 214

ASSEMBLY PARTS LIST

PRINT DATE 07-03-79 | PAGE 6 | PRE CHANGE NO. 00013581

DIV.	ASSEMBLY NUMBER	CD	REV.	DWG.	DESCRIPTION	MC	STATUS	STATUS DATE	ENG. RESP	FILE DATE
0860	90446086	2	C	D	PC CARD ASSY 9ATD	S	REL	02-19-79	CC555C	07-03-79

T	FIND NO	LI	PART NUMBER	CD	M	QUANTITY	U/M	PART DESCRIPTION	MC	YLD	ECO. NO. IN	ECO NO. OUT	S/N	WK IN	WK OUT
	108	01	62201031	2		REF	PC	LOGIC DIAG	D						
	109	01	24500075	7		4	PC	RES FXD COMP 3300 OHM 5P 1/4W	P						
	110	01	94375102	4		3	PC	RES 8SIP NTWK 3300 R 3P 1.0W	P						
	111	01	24500061	7		1	PC	RES FXD COMP 820 OHM 5P 1/4W	P						
	112	01	24500059	1		1	PC	RES FXD COMP 680 OHM 5P 1/4W	P						
	113	01	51892316	4		1	PC	IC 1024BIT 256X4 BP-ROM ASSY	V						
	114	01	94375109	9		1	PC	RES 8SIP NTWK 1000 R 3P 1.0W	P						
	115	01	52629949	0		750	FT	WIR WW 30GA SLD WHT UL KYNAR	W		13581			7926	
								0113 TOTAL LINES							

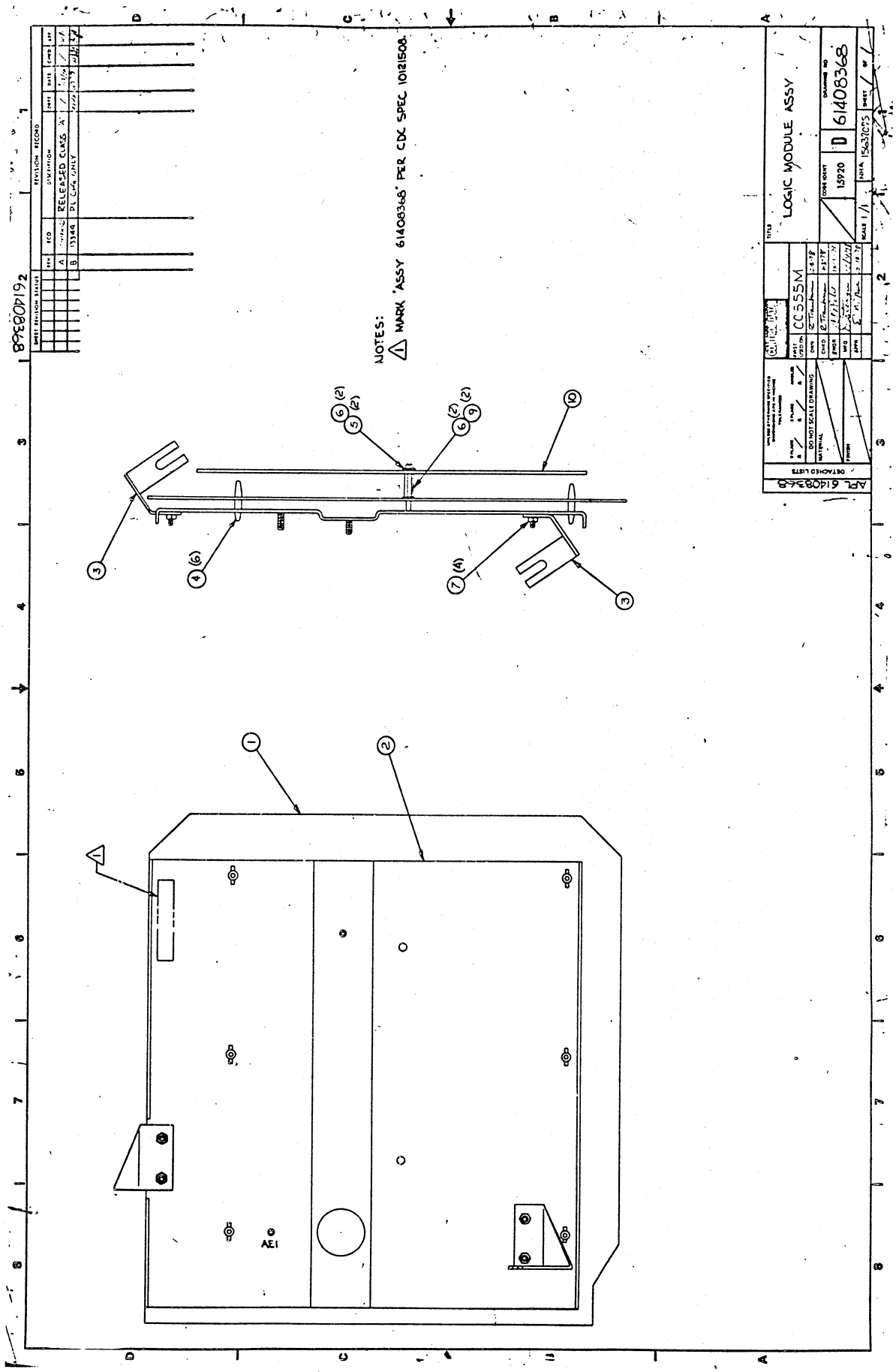
NOTES:
1 MARK 'ASSY 61408368' PER CDC SPEC 10121508.
LOGIC MODULE ASSY
61408368
D
15920
CC555M
DO NOT SCALE DRAWING
APL 61408368
AE1
61408368

BUILD ARC 440

ASSEMBLY PARTS LIST

PRINT DATE 05-14-79 | PAGE 1 | PRE CHANGE NO 00013744

DIV	ASSEMBLY NUMBER	TYP	REV	RWO	DESCRIPTION	MC	STATUS	STATUS DATE	ENG RESP	PRE DATE
0860	614 8368	1	B	D	LOGIC MODULE ASSY	N	REL	10-12-78		05-14-79

TRANS NO	LI	PART NUMBER	CD	M	QUANTITY	U/M	PART DESCRIPTION	MK	VEN	ECO NO IN	ECO NO OUT	U/M	WK IN	WK OUT
001	01	9044[illegible]9	6		1	PC	CD ASSY PCBD LOG MOD	A			13344			7936
001	02	9044[illegible]8	B		1	PC	PC CARD ASSY BAVP	S		13344			7936	
002	01	71485900	6		1	PC	MOUNTING PLATE	P						
003	01	71480500	1		2	PC	BRACKET MTG PLATE	P						
004	01	51777300	H		6	PC	SPRT, CKT BD 3/16 NYL FIR 1	P						
005	01	10127104	7		2	PC	MSCR PAN PHL 4-40X.375 STL ZP	B						
006	01	10124400	0		4	PC	WSHR, NO.4 EXT/T LK STL ZP	B						
007	01	10122901	1		4	PC	NUT, HEX 6-32 TWIN-LKG STL	B						
009	01	51875304	1		2	PC	STDOFF, H-F HEX MCS 4-40X5/8	B						
010	01	71491829	9		1	PC	SHIELD(P-B ASSY)	P						
							0010 TOTAL LINES							

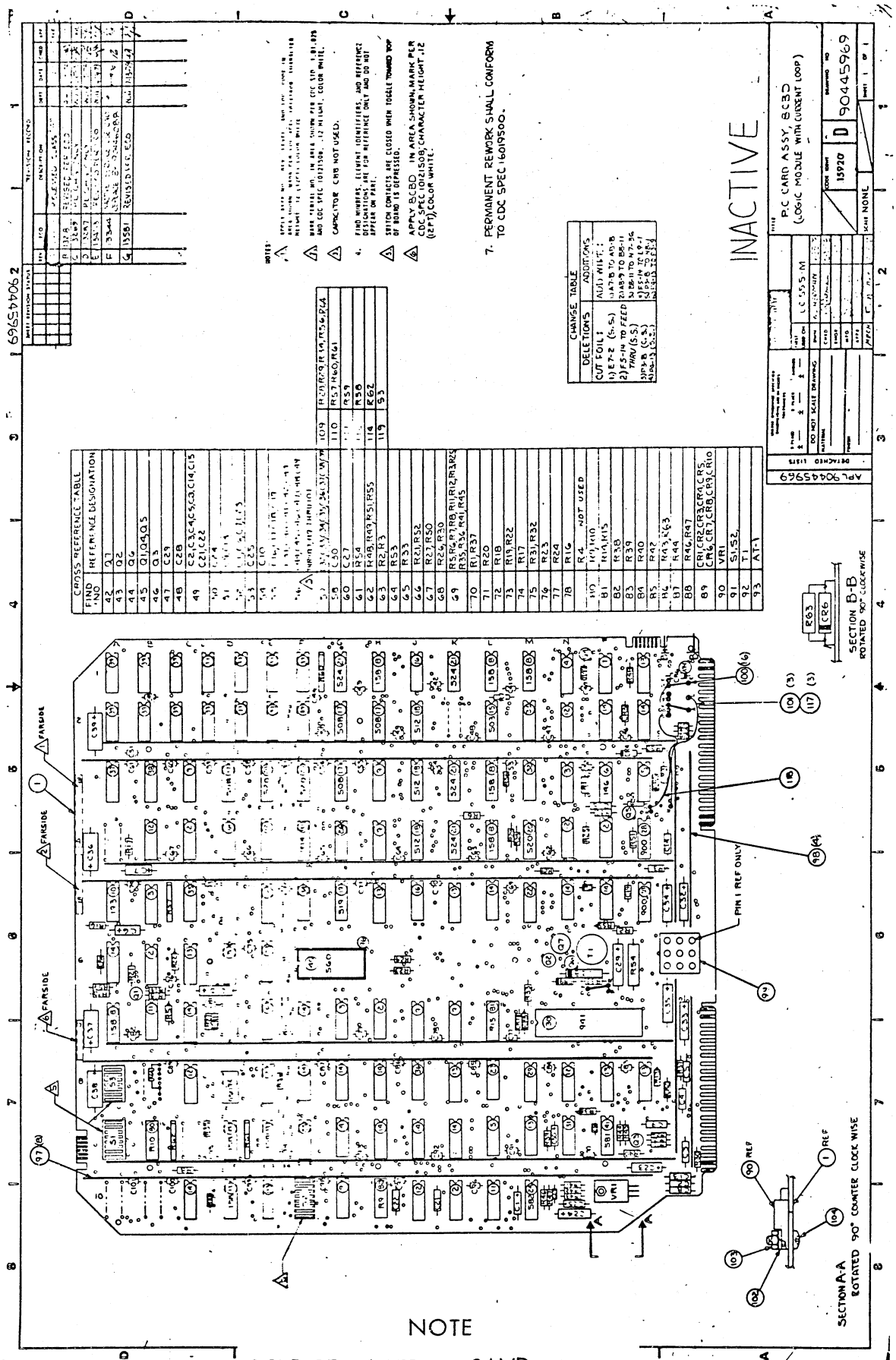

NOTE

8CBD REPLACED BY 9AVD CARD,
PART NUMBER 90446088

BUILD ARC 210

ASSEMBLY PARTS LIST

PRINT DATE 07-03-79 | PAGE 1 | FILE CHANGE NO 00013581

DIV	ASSEMBLY NUMBER	CO	REV	DWG	DESCRIPTION	MC	STATUS	STATUS DATE	ENG RESP	FILE DATE
0860	90445969	0	G	D	REPLACED BY 90446088 13344A	A	INA	05-04-79		07-03-79

I	FIND NO	LI	PART NUMBER	CO	M	QUANTITY	U/M	PART DESCRIPTION	MC	YLD	ECO NO IN	ECO NO OUT	S/N	WK IN	WK OUT
	001	01	90460763	7		1	PC	REPLACED BY 90446100 13403	P						
	002	01	66299099	3		6	PC	IC 7400 TTL QUAD 2-IN NAND	P						
	003	01	66299100	9		3	PC	IC 7410 141 TTL3 3I/P NAND	P						
	004	01	66299102	5		2	PC	IC TTL DUAL 4-IN NAND	P						
	005	01	66299103	3		3	PC	IC 7402 148 TTL QUAD 2-IN NOR	P						
	006	01	39389700	4		4	PC	IC 7404 146-TTL HEX INVTR	P						
	007	01	88885700	0		1	PC	IC TYPE 7486TTL QUAD 2 I/P	P						
	008	01	51761500	1		9	PC	IC 74161/9316 158 TTL CNTR 6	P						
	009	01	88886400	6		6	PC	IC TYPE 74157 TTL QUAD 2I/P	P						
	010	01	50254300	2		1	PC	IC 74123 193 TTL 2 RETGR MVB	P						
	011	01	96744155	1		2	PC	IC 7406 DRVR HEX INV BUFFER	P						
	012	01	88897000	1		7	PC	IC 7408 201 TTL QUAD 2-IN AND	P						
	013	01	96744172	6		8	PC	IC 7432 218 TTL QUAD 2IN OR	P						
	014	01	88885400	7		15	PC	IC TYPE 9024 TTL DUAL FLIP FO	P						
	015	01	95814600	3		1	PC	IC 74160/9310 503 TTL UP DEC	P						
	016	01	66299110	8		2	PC	IC TTL 1 OF 10 DECODER	P						
	017	01	66299111	6		4	PC	IC TTL DUAL 4 TO 1 MUX	P						
	018	01	52342700	3		3	PC	IC 74191/9336 512 TTL 4B BIN	P						
	019	01	88882800	1		1	PC	IC 74174 519 TTL 6BIT D LATCH	P						
	020	01	15104500	2		3	PC	IC 74175 520 TTL 4 BIT D LTCH	P						
	021	01	15108600	6		4	PC	IC 7485 524 TTL 4B MGNTD CPTR	P						

BUILD ARC 210

ASSEMBLY PARTS LIST

PRINT DATE 07-03-79 | PAGE 2 | FILE CHANGE NO 00013581

DIV	ASSEMBLY NUMBER	CO	REV	DWG	DESCRIPTION	MC	STATUS	STATUS DATE	ENG RESP	FILE DATE
0860	90445969	0	G	D	REPLACED BY 90446088 13344A	A	INA	05-04-79		07-03-79

I	FIND NO	LI	PART NUMBER	CO	M	QUANTITY	U/M	PART DESCRIPTION	MC	YLD	ECO NO IN	ECO NO OUT	S/N	WK IN	WK OUT
	022	01	88923600	6		1	PC	IC TYPE 74164 TTL 8BIT	P						
	023	01	88923700	4		1	PC	IC TYPE 74165 TTL 8BIT	P						
	024	01	15105700	7		1	PC	IC 4024 582 TTL DL/V CONT MVB	P						
	025	01	51861706	3		1	PC	IC 256BIT 32X8 BP-ROM ASSY	Q						
	026	01	51861711	3		1	PC	IC 256BIT 32X8 BP-ROM ASSY	V						
	027	01	51861709	7		1	PC	IC 256BIT 32X8 BP-ROM ASSY	V						
	028	01	36186400	2		2	PC	IC MC1488 900 DTL QD LN DRVR	P						
	029	01	36186500	9		1	PC	IC MC1489 901 DTL QD LN RCVR	P						
	030	01	15125700	3		1	PC	IC TR1602A 941 MOS ASYN XCVR	P						
	031	01	88896100	0		1	PC	IC 7414 843 TTL HEX NAND RCVR	P						
	032	01	51892308	1		1	PC	IC 1024BIT 256X4 BP-ROM ASSY	V						
	033	01	51892309	9		1	PC	IC 1024BIT 256X4 BP-ROM ASSY	V						
	034	01	51892310	7		1	PC	IC 1024BIT 256X4 BP-ROM ASSY	V						
	035	01	51892311	5		1	PC	IC 1024BIT 256X4 BP-ROM ASSY	V						
	036	01	51892315	6		1	PC	IC 1024BIT 256X4 BP-ROM ASSY	V						
	037	01	51892313	1		1	PC	IC 1024BIT 256X4 BP-ROM ASSY	V						
	038	01	51892314	9		1	PC	IC 1024BIT 256X4 BP-ROM ASSY	V						
	039	01	15140300	3		14	PC	IC 2102A-4 772A MOS 1024B RAM	P						
	040	01	15144500	4		1	PC	IC SCM3750L 560 MOS 8192B ROM	P						
	041	01	15105600	9		1	PC	IC 4044 581 TTL PH/FREQ DETR	P						
	042	01	51681100	7		1	PC	XSTR 2N5189 NPN SIL	P						

BUILD ARC 210

ASSEMBLY PARTS LIST

PRINT DATE 07-03-79 | PAGE 3 | FILE CHANGE NO 00013581

DIV	ASSEMBLY NUMBER	CD	REV.	DWG	DESCRIPTION	MC	STATUS	STATUS DATE	ENG. RESP	FILE DATE
0860	90445969	0	G	D	REPLACED BY 90446088 13344A	A	INA	05-04-79		07-03-79

FIND NO	LI	PART NUMBER	CD	M	QUANTITY	U/M	PART DESCRIPTION	MC	YLD	ECO NO IN	ECO NO OUT	S/N	WK IN	WK OUT
043	01	51003092	7		1	PC	XSTR 2N2222 HI SPEED NPN SIL	P						
044	01	51714000	0		1	PC	XSTR 2N2907 PNP SIL	P						
045	01	51003059	6		3	PC	XSTR DD1 106 EPITAX NPN SIL	P						
046	01	51887100	9		1	PC	XSTR TO-18 LOW LVL NPN SIL	P						
047	01	24504373	2		1	PC	CAP FXD TANT 47UF 20P 15VDCW	P						
048	01	24506809	3		1	PC	CAP FXD MYL .022UF 10P 100V	P						
049	01	51839147	9		9	PC	CAP FXD CER .100UF 10P 100VDC	P						
050	01	24504369	0		1	PC	CAP FXD TANT 10UF 20P 15VDCW	P						
051	01	51839142	0		2	PC	CAP FXD CER .033UF 10P 100VDC	P						
052	01	51879105	8		4	PC	CAP FXD TANT 100UF 10P 6VDCW	P						
053	01	24504317	9		1	PC	CAP FXD TANT .1UF 20P 35VDCW	P						
054	01	24504322	9		1	PC	CAP FXD TANT 47UF 20P 6VDCW	P						
055	01	51839119	8		4	PC	CAP FXD CER 390PF 10P 100VDC	P						
056	01	51001120	8		62	PC	CAP CER F-2 .01UF +80-20P 25V	P						
057	01	51786437	7		8	PC	CAP SOLID TANT 33UF 20P 15V	P						
058	01	24504312	0		1	PC	CAP FXD TANT 6.8UF 20P 6WVDC	P						
060	01	94227216	2		1	PC	CAP DIP MICA 39PF 1PF 300VDCW	P						
061	01	24504817	8		1	PC	RES FXD COMP 12 OHM 5P 2WATT	P						
062	01	24500065	8		4	PC	RES FXD COMP 1200 OHM 5P 1/4W	P						
063	01	24500051	8		2	PC	RES FXD COMP 330 OHM 5P 1/4W	P						
064	01	24500043	5		1	PC	RES FXD COMP 150 OHM 5P 1/4W	P						

BUILD ARC 210

ASSEMBLY PARTS LIST

PRINT DATE 07-03-79 | PAGE 4 | FILE CHANGE NO 00013581

DIV 0860 | ASSEMBLY NUMBER 90445969 | CD 0 | REV. G | DWG D | DESCRIPTION REPLACED BY 90446088 13344A | MC A | STATUS INA | STATUS DATE 05-04-79 | ENG. RESP | FILE DATE 07-03-79

FIND NO	LI	PART NUMBER	CD	M	QUANTITY	U/M	PART DESCRIPTION	MC	YLD	ECO NO IN	ECO NO OUT	S/N	WK IN	WK OUT
065	01	17705914	4		1	PC	RES FXD COMP 120K OHM 5P 1/4W	P						
066	01	24500055	9		2	PC	RES FXD COMP 470 OHM 5P 1/4W	P						
067	01	24500087	2		2	PC	RES FXD COMP 10K OHM 5P 1/4W	P						
068	01	24500039	3		2	PC	RES FXD COMP 100 OHM 5P 1/4W	P						
069	01	24500063	3		12	PC	RES FXD COMP 1000 OHM 5P 1/4W	P						
070	01	24500079	9		2	PC	RES FXD COMP 4700 OHM 5P 1/4W	P						
071	01	24500027	8		1	PC	RES FXD COMP 33 OHM 5P 1/4W	P						
072	01	24500036	9		1	PC	RES FXD COMP 75 OHM 5P 1/4W	P						
073	01	24500048	4		2	PC	RES FXD COMP 240 OHM 5P 1/4W	P						
074	01	24500081	5		1	PC	RES FXD COMP 5600 OHM 5P 1/4W	P						
075	01	24500073	2		2	PC	RES FXD COMP 2700 OHM 5P 1/4W	P						
076	01	17705903	7		1	PC	RES FXD COMP 43K OHM 5P 1/4W	P						
077	01	24500098	9		1	PC	RES FXD COMP 30K OHM 5P 1/4W	P						
078	01	24500084	9		1	PC	RES FXD COMP 7500 OHM 5P 1/4W	P						
080	01	62012906	4		2	PC	RES MOD DUAL 1K OHMS 125MW	P						
081	01	62012920	5		2	PC	RES MOD DUAL 4.7K OHM 125MW	P						
082	01	24500056	7		1	PC	RES FXD COMP 510 OHM 5P 1/4W	P						
083	01	24500077	3		1	PC	RES FXD COMP 3900 OHM 5P 1/4W	P						
084	01	17705908	6		1	PC	RES FXD COMP 68K OHM 5P 1/4W	P						
085	01	24500071	6		1	PC	RES FXD COMP 2200 OHM 5P 1/4W	P						
086	01	24500047	6		2	PC	RES FXD COMP 220 OHM 5P 1/4W	P						

BUILD ARC 210

ASSEMBLY PARTS LIST

PRINT DATE 07-03-79 | PAGE 5 | FRE CHANGE NO. 00013581

DIV.	ASSEMBLY NUMBER	CD	REV.	DWG.	DESCRIPTION	MC	STATUS	STATUS DATE	ENG. RESP.	FRE DATE
0860	90445969	0	G	D	REPLACED BY 90446088 13344A	A	INA	05-04-79		07-03-79

T	FIND NO	LI	PART NUMBER	CD	M	QUANTITY	U/M	PART DESCRIPTION	MC	YLD	ECO. NO. IN	ECO. NO. OUT	S/N	WE IN	WE OUT
	087	01	24500074	0		1	PC	RES FXD COMP 3000 OHM 5P 1/4W	P						
	088	01	94360292	0		2	PC	RES FXD FM 909 OHM 1P 1/4W	P						
	089	01	51001239	6		10	PC	REPLACED BY 51007385 12937	P			13269			7850
	089	02	51007385	1		10	PC	DIO IN4148 10MA MICRO SIL 30V	P		13269			7850	
	090	01	15151500	4		1	PC	IC UA7800+5 357A POS V RGLTR	P						
	091	01	51862504	1		1	PC	SW, PC BD TGL 8 IN-LINE SPST	P			13483			7915
	091	02	51862504	1		2	PC	SW, PC BD TGL 8 IN-LINE SPST	P		13483			7915	
	092	01	30001000	6		1	PC	XFMR, PULSE COUPLING MEM DRVR	P						
	093	01	95791300	7		1	PC	IC 4N26 OPT COUPLED ISOLATOR	P			13287			7852
	093	02	51825700	1		1	PC	OPTICAL ISOLATOR	P		13287			7852	
	094	01	51904105	7		1	PC	OSC, TTL DIP 6.745MHZ 500MW	P						
	096	01	51848404	3		1	PC	SOCKET, IC 24 POS D-I-L TIN	P						
	097	01	71486102	8		8	PC	BUS, PWR 11.38LG W/POSTS CU	P						
	098	01	71486101	0		4	PC	BUS, PWR 3.6LG W/POSTS CU	P						
	099	01	51906111	3		1	PC	CONN, 9 PIN PC MTD GOLD FIG 3	P						
	100	01	65832100	5		16	PC	SOCKET MINI SPRING	P						
	101	01	95642805	6		400	FT	WIR SLD 24GA TINNED	W						
	102	01	10125801	0		1	PC	WSHR, NO.4 SPG LOCK STL ZP	B						
	103	01	10125103	1		1	PC	NUT, HEX 4-40 MSCR STL ZP	B						
	104	01	92780084	7		1	PC	MSCR PAN SLT 4-40X5/16 SST P	B						
	105	01	16006500	9		REF	PC	FABRICATION SPECIFICATION	D						
	106	01	10121508	5		REF	PC	MARKING, INK STP-STENCIL-S/C	D						

BUILD ARC 210

ASSEMBLY PARTS LIST

PRINT DATE 07-03-79 | PAGE 6 | FRE CHANGE NO. 00013581

DIV. 0860 | ASSEMBLY NUMBER 90445969 | CD 0 | REV. G | DWG. D | DESCRIPTION REPLACED BY 90446088 13344A | MC A | STATUS INA | STATUS DATE 05-04-79 | ENG. RESP. | FRE DATE 07-03-79

T	FIND NO	LI	PART NUMBER	CD	M	QUANTITY	U/M	PART DESCRIPTION	MC	YLD	ECO. NO. IN	ECO. NO. OUT	S/N	WE IN	WE OUT
	107	01	16019500	4		REF	PC	REQ/INSTALLATION OF EXT CKTS	D						
	108	01	90445966	6		REF	PC	SCH DIAG BCAD MULTI-USE	D						
	109	02	24500075	7		5	PC	RES FXD COMP 3300 OHM 5P 1/4W	P		13269			7850	
	110	01	94375102	4		3	PC	RES BSIP NTWK 3300 R 3P 1.0W	P						
	111	01	24500061	7		1	PC	RES FXD COMP 820 OHM 5P 1/4W	P						
	112	01	24500059	1		1	PC	RES FXD COMP 680 OHM 5P 1/4W	P						
	113	01	51892316	4		1	PC	IC 1024BIT 256X4 BP-ROM ASSY	V						
	114	01	94375109	9		1	PC	RES BSIP NTWK 1000 R 3P 1.0W	P						
	115	03	52629949	0		2	500 FT	WIR WW 30GA SLD WHT UL KYNAR	W		13218	13581		7846	7926
	115	04	52629949	0		3	250 FT	WIR WW 30GA SLD WHT UL KYNAR	W		13581			7926	
	117	01	24528619	0		400	FT	TBG, NO. 22 INS CLR UL PVC	B						
	118	01	61408352	5		1	PC	JUMPER WIRE ASSY	A						
	119	01	51862500	9		1	PC	SW, PC BD TGL 7 IN-LINE SPST	P		13483			7915	

0119 TOTAL LINES

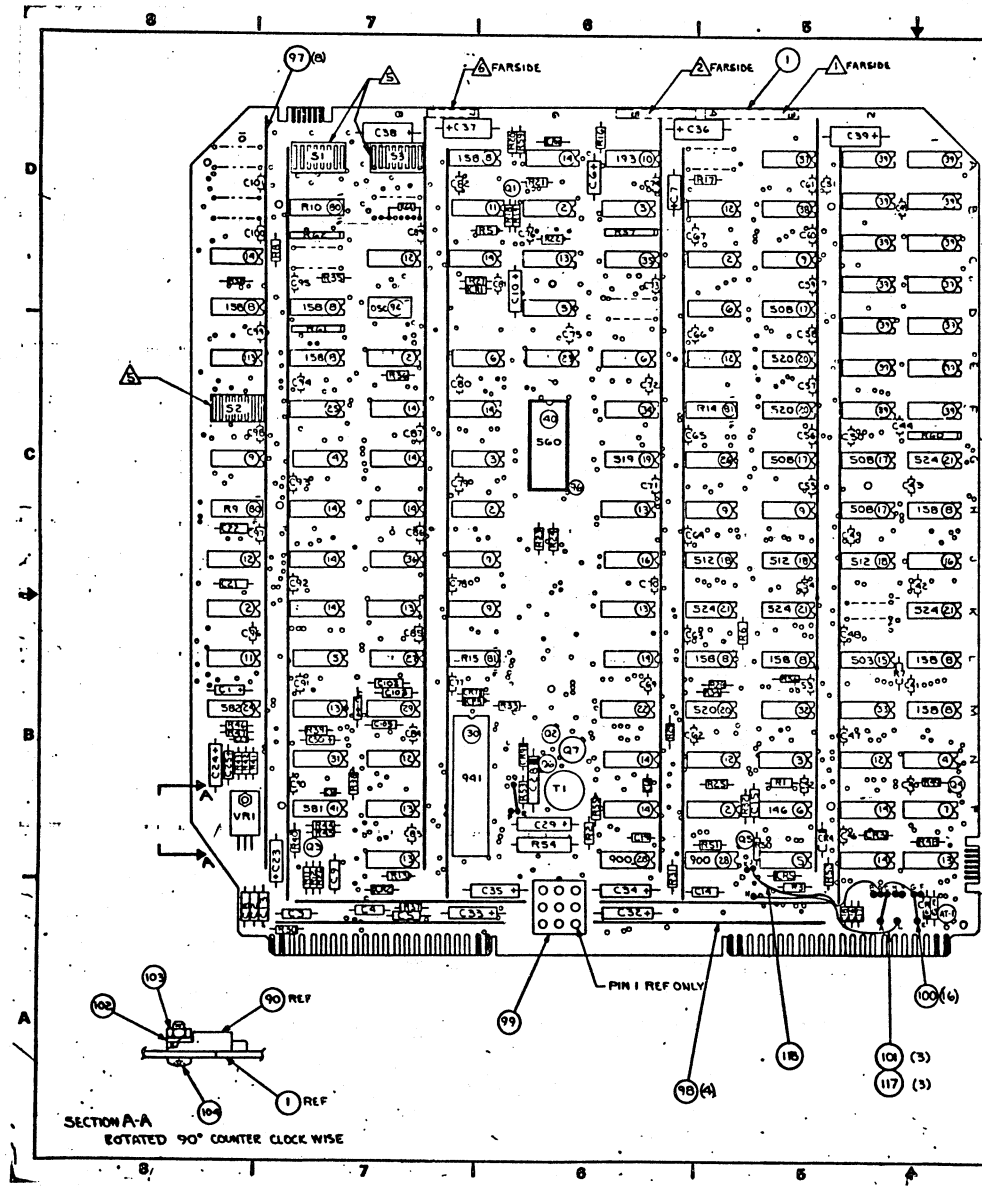

CROSS REFERENCE TABLE	
FIND NO.	REFERENCE DESIGNATION
42	Q7
43	Q2
44	Q6
45	Q1,Q4,Q5
46	Q3
47	C29
48	C28
49	C2,C3,C4,C5,C8,C14,C15 C21,C22
50	C24
51	C9,C13
52	C1,C6,C7,C23
53	C25
54	C10
55	C16,C17,C18,C19 C102,C103,C104,C105
56 △3	C31,C40,C41,C42,C43 C44,C45,C46,C47,C48,C49 THRU 87,89 THRU 101
57	C32,C33,C34,C35,C36,C37,C38,C39
58	C30
60	C27
61	R54
62	R48,R49,R51,R55
63	R2,R3
64	R53
65	R33
66	R21,R52
67	R27,R50
68	R26,R30
69	R5,R6,R7,R8,R11,R12,R13,R25 R35,R36,R41,R45
70	R1,R37
71	R20
72	R18
73	R19,R22
74	R17
75	R31,R32
76	R23
77	R24
78	R16
	R4 NOT USED
80	R9,R10
81	R14,R15
82	R38
83	R39
84	R40
85	R42
86	R43,R63
87	R44
88	R46,R47
89	CR1,CR2,CR3,CR4,CR5, CR6,CR7,CR8,CR9,CR10
90	VR1
91	S1,S2
92	T1
93	AT-1
109	R28,R29,R34,R56,R64
110	R57,R60,R61
111	R59
112	R58
114	R62
119	S3

REVISION RECORD						
REV	ECO	DESCRIPTION	DEPT	DATE	CHKD	APP
A	[illegible]	RELEASED CLASS "A"		[illegible]	[illegible]	[illegible]
B	13344	REVISED PER ECO	[illegible]	[illegible]	[illegible]	[illegible]
C	13581	REVISED PER ECO	[illegible]	7-12-79	[illegible]	[illegible]

NOTES:

1. APPLY ASSY NO., REV. LEVEL, AND LOC. CODE IN AREA SHOWN, MARK PER CDC SPEC 10121508, CHARACTER HEIGHT .12 (12PT) COLOR WHITE.
2. MARK SERIAL NO. IN AREA SHOWN PER CDC STD. 1.01.025 AND CDC SPEC 10121508, .12 HEIGHT, COLOR WHITE.
3. CAPACITOR C88 NOT USED.
4. FIND NUMBERS, ELEMENT IDENTIFIERS, AND REFERENCE DESIGNATIONS ARE FOR REFERENCE ONLY AND DO NOT APPEAR ON PART.
5. SWITCH CONTACTS ARE CLOSED WHEN TOGGLE TOWARD TOP OF BOARD IS DEPRESSED.
6. APPLY 9AVD IN AREA SHOWN. MARK PER CDC SPEC 10121508; CHARACTER HEIGHT .12 (12PT), COLOR WHITE.
7. PERMANENT REWORK SHALL CONFORM TO CDC SPEC 16019500.

CHANGE TABLE	
DELETIONS	ADDITIONS
CUT FOIL: 1.) E7-2 (S.S.) 2.) P3-8 (C.S.) 3.) P4-13 (S.S.)	ADD WIRE: 1.) A7-8 TO A8-8 2.) A8-9 TO B8-11 3.) B8-11 TO N7-36 4.) P3-8 TO N8-1 5.) P4-13 TO P3-9

APL 90446088 DETACHED LISTS

DO NOT SCALE DRAWING

CONTROL DATA

CC 555-M

DWN W.J. HERMAN

TITLE P.C CARD ASSY, 9AVD (LOGIC MODULE WITH CURRENT LOOP)

CODE IDENT 15920 D 90446088

SCALE NONE SHEET 1 OF 1

BUILD ARC 210

ASSEMBLY PARTS LIST

PRINT DATE 07-03-79 | PAGE 1 | PRE CHANGE NO 00013981

DIV	ASSEMBLY NUMBER	CD	REV.	DWG.	DESCRIPTION	MC	STATUS	STATUS DATE	ENG. RESP	PRE DATE
0860	90446088	8	C	D	PC CARD ASSY 9AVD	A	REL	02-19-79	CC555H	07-03-79

T	FIND NO	LI	PART NUMBER	CD	M	QUANTITY	U/M	PART DESCRIPTION	MC	YLD	ECO NO IN	ECO NO OUT	S/N	WE IN	WE OUT
	001	01	90460763	7		1	PC	REPLACED BY 90446100 13403	P			13344			7936
	001	02	90446100	1		1	PC	PW BD MULTI USE	P		13344			7936	
	002	01	66299099	3		6	PC	IC 7400 TTL QUAD 2-IN NAND	P						
	003	01	66299100	9		3	PC	IC 7410 141 TTL3 3I/P NAND	P						
	004	01	66299102	5		2	PC	IC TTL DUAL 4-IN NAND	P						
	005	01	66299103	3		3	PC	IC 7402 148 TTL QUAD 2-IN NOR	P						
	006	01	39389700	4		4	PC	IC 7404 146-TTL HEX INVTR	P						
	007	01	88885700	0		1	PC	IC TYPE 7486TTL QUAD 2 I/P	P						
	008	01	51761500	1		9	PC	IC 74161/9316 158 TTL CNTR 6	P						
	009	01	88886400	6		6	PC	IC TYPE 74157 TTL QUAD 2I/P	P						
	010	01	50254300	2		1	PC	IC 74123 193 TTL 2 RETGR MVB	P						
	011	01	96744155	1		2	PC	IC 7406 DRVR HEX INV BUFFER	P						
	012	01	88897000	1		7	PC	IC 7408 201 TTL QUAD 2-IN AND	P						
	013	01	96744172	6		8	PC	IC 7432 218 TTL QUAD 2IN OR	P						
	014	01	88885400	7		15	PC	IC TYPE 9024 TTL DUAL FLIP FO	P						
	015	01	95814600	3		1	PC	IC 74160/9310 503 TTL UP DEC	P						
	016	01	66299110	8		2	PC	IC TTL 1 OF 10 DECODER	P						
	017	01	66299111	6		4	PC	IC TTL DUAL 4 TO 1 MUX	P						
	018	01	52342700	3		3	PC	IC 74191/9336 512 TTL 4B BIN	P						
	019	01	88882800	1		1	PC	IC 74174 519 TTL 6BIT D LATCH	P						
	020	01	15104500	2		3	PC	IC 74175 520 TTL 4 BIT D LTCH	P						

BUILD ARC 210

ASSEMBLY PARTS LIST

PRINT DATE 07-03-79 | PAGE 2 | PRE CHANGE NO 00013981

DIV	ASSEMBLY NUMBER	CD	REV.	DWG.	DESCRIPTION	MC	STATUS	STATUS DATE	ENG. RESP	PRE DATE
0860	90446088	8	C	D	PC CARD ASSY 9AVD	A	REL	02-19-79	CC555H	07-03-79

T	FIND NO	LI	PART NUMBER	CD	M	QUANTITY	U/M	PART DESCRIPTION	MC	YLD	ECO NO IN	ECO NO OUT	S/N	WE IN	WE OUT
	021	01	15108600	6		4	PC	IC 7485 524 TTL 4B MGNTD CPTR	P						
	022	01	88923600	6		1	PC	IC TYPE 74164 TTL 8BIT	P						
	023	01	88923700	4		1	PC	IC TYPE 74165 TTL 8BIT	P						
	024	01	15105700	7		1	PC	IC 4024 582 TTL DL/V CONT MVB	P						
	025	01	51861706	3		1	PC	IC 256BIT 32X8 BP-ROM ASSY	G						
	026	01	51861711	3		1	PC	IC 256BIT 32X8 BP-ROM ASSY	V						
	027	01	51861709	7		1	PC	IC 256BIT 32X8 BP-ROM ASSY	V						
	028	01	36186400	2		2	PC	IC MC1488 900 DTL QD LN DRVR	P						
	029	01	36186500	9		1	PC	IC MC1489 901 DTL QD LN RCVR	P						
	030	01	15125700	3		1	PC	IC TR1602A 941 MOS ASYN XCVR	P						
	031	01	88896100	0		1	PC	IC 7414 843 TTL HEX NAND RCVR	P						
	032	01	51892308	1		1	PC	IC 1024BIT 256X4 BP-ROM ASSY	V						
	033	01	51892309	9		1	PC	IC 1024BIT 256X4 BP-ROM ASSY	V						
	034	01	51892310	7		1	PC	IC 1024BIT 256X4 BP-ROM ASSY	V						
	035	01	51892311	5		1	PC	IC 1024BIT 256X4 BP-ROM ASSY	V						
	036	01	51892315	6		1	PC	IC 1024BIT 256X4 BP-ROM ASSY	V						
	037	01	51892313	1		1	PC	IC 1024BIT 256X4 BP-ROM ASSY	V						
	038	01	51892314	9		1	PC	IC 1024BIT 256X4 BP-ROM ASSY	V						
	039	01	15140300	3		14	PC	IC 2102A-4 772A MOS 1024B RAM	P						
	040	01	15144500	4		1	PC	IC SCH3750L 560 MOS 8192B ROM	P						
	041	01	15105600	9		1	PC	IC 4044 581 TTL PH/FREQ DETR	P						

BUILD ARC 210

ASSEMBLY PARTS LIST

PRINT DATE 07-03-79 | PAGE 3 | PRE CHANGE NO 00013581

DIV	ASSEMBLY NUMBER	CD	REV	DWG.	DESCRIPTION	MC	STATUS	STATUS DATE	ENG. RESP	PRE DATE
0860	90446088	8	C	D	PC CARD ASSY 9AVD	A	REL	02-19-79	CC555M	07-03-79

FIND NO	LI	PART NUMBER	CD	QUANTITY	U/M	PART DESCRIPTION	MC	YLD	ECO NO IN	ECO NO OUT	S/N	WE IN	WE OUT
042	01	51681100	7	1	PC	XSTR 2N5189 NPN SIL	P						
043	01	51003092	7	1	PC	XSTR 2N2222 HI SPEED NPN SIL	P						
044	01	51714000	0	1	PC	XSTR 2N2907 PNP SIL	P						
045	01	51003059	6	3	PC	XSTR DDI 1n6 EPITAX NPN SIL	P						
046	01	51887100	9	1	PC	XSTR TO-18 LOW LVL NPN SIL	P						
047	01	24504373	2	1	PC	CAP FXD TANT 47UF 20P 15VDCW	P						
048	01	24506809	3	1	PC	CAP FXD MYL .022UF 10P 100V	P						
049	01	51839147	9	9	PC	CAP FXD CER .100UF 10P 100VDC	P						
050	01	24504369	0	1	PC	CAP FXD TANT 10UF 20P 15VDCW	P						
051	01	51839142	0	2	PC	CAP FXD CER .033UF 10P 100VDC	P						
052	01	51879105	8	4	PC	CAP FXD TANT 100UF 10P 6VDCW	P						
053	01	24504317	9	1	PC	CAP FXD TANT .1UF 20P 35VDCW	P						
054	01	24504322	9	1	PC	CAP FXD TANT 47UF 20P 6VDCW	P						
055	01	51839119	8	8	PC	CAP FXD CER 390PF 10P 100VDC	P						
056	01	51001120	8	62	PC	CAP CER F-2 .01UF +80-20P 25V	P						
057	01	51786437	7	8	PC	CAP SOLID TANT 33UF 20P 15V	P						
058	01	24504312	0	1	PC	CAP FXD TANT 6.8UF 20P 6WVDC	P						
060	01	94227216	2	1	PC	CAP DIP MICA 39PF 1PF 300VDCW	P						
061	01	24504817	8	1	PC	RES FXD COMP 12 OHM 5P 2WATT	P						
062	01	24500065	6	4	PC	RES FXD COMP 1200 OHM 5P 1/4W	P						
063	01	24500051	8	2	PC	RES FXD COMP 330 OHM 5P 1/4W	P						

BUILD ARC 210

ASSEMBLY PARTS LIST

PRINT DATE 07-03-79 | PAGE 4 | PRE CHANGE NO 00013581

DIV	ASSEMBLY NUMBER	CD	REV	DWG.	DESCRIPTION	MC	STATUS	STATUS DATE	ENG. RESP	PRE DATE
0860	90446088	8	C	D	PC CARD ASSY 9AVD	A	REL	02-19-79	CC555M	07-03-79

FIND NO	LI	PART NUMBER	CD	QUANTITY	U/M	PART DESCRIPTION	MC	YLD	ECO NO IN	ECO NO OUT	S/N	WE IN	WE OUT
064	01	24500043	5	1	PC	RES FXD COMP 150 OHM 5P 1/4W	P						
065	01	17705914	4	1	PC	RES FXD COMP 120K OHM 5P 1/4W	P						
066	01	24500055	9	2	PC	RES FXD COMP 470 OHM 5P 1/4W	P						
067	01	24500087	2	2	PC	RES FXD COMP 10K OHM 5P 1/4W	P						
068	01	24500039	3	2	PC	RES FXD COMP 100 OHM 5P 1/4W	P						
069	01	24500063	3	12	PC	RES FXD COMP 1000 OHM 5P 1/4W	P						
070	01	24500079	9	2	PC	RES FXD COMP 4700 OHM 5P 1/4W	P						
071	01	24500027	8	1	PC	RES FXD COMP 33 OHM 5P 1/4W	P						
072	01	24500036	9	1	PC	RES FXD COMP 75 OHM 5P 1/4W	P						
073	01	24500048	4	2	PC	RES FXD COMP 240 OHM 5P 1/4W	P						
074	01	24500081	5	1	PC	RES FXD COMP 5600 OHM 5P 1/4W	P						
075	01	24500073	2	2	PC	RES FXD COMP 2700 OHM 5P 1/4W	P						
076	01	17705903	7	1	PC	RES FXD COMP 43K OHM 5P 1/4W	P						
077	01	24500098	9	1	PC	RES FXD COMP 30K OHM 5P 1/4W	P						
078	01	24500084	9	1	PC	RES FXD COMP 7500 OHM 5P 1/4W	P						
080	01	62012906	4	2	PC	RES MOD DUAL 1K OHMS 125MW	P						
081	01	62012920	5	2	PC	RES MOD DUAL 4.7K OHM 125MW	P						
082	01	24500056	7	1	PC	RES FXD COMP 510 OHM 5P 1/4W	P						
083	01	24500077	3	1	PC	RES FXD COMP 3900 OHM 5P 1/4W	P						
084	01	17705908	8	1	PC	RES FXD COMP 68K OHM 5P 1/4W	P						
085	01	24500071	6	1	PC	RES FXD COMP 2200 OHM 5P 1/4W	P						

BUILD ARC 210

ASSEMBLY PARTS LIST

PRINT DATE 07-03-79 | PAGE 5 | FILE CHANGE NO. 00013581

DIV.	ASSEMBLY NUMBER	CD	REV.	DWG.	DESCRIPTION	MC	STATUS	STATUS DATE	ENG. RESP.	FILE DATE
0860	90446088	8	C	D	PC CARD ASSY 9AVD	A	REL	02-19-79	CC555M	07-03-79

T	FIND NO	LI	PART NUMBER	CD	M	QUANTITY	U/M	PART DESCRIPTION	MC	YLD	ECO. NO. IN	ECO. NO. OUT	S/N	WK IN	WK OUT
	086	01	24500047	6		2	PC	RES FXD COMP 220 OHM 5P 1/4W	P						
	087	01	24500074	0		1	PC	RES FXD COMP 3000 OHM 5P 1/4W	P						
	088	01	94360292	0		2	PC	RES FXD FM 909 OHM 1P 1/4W	P						
	089	01	51007385	1		10	PC	DIO IN4148 10MA MICRO SIL 30V	P						
	090	01	15151500	4		1	PC	IC UA78005 357A POS V RGLTR	P						
	091	01	51862504	1		3	PC	SW, PC BD TGL 8 IN-LINE SPST	P			13344			7936
	091	02	51862504	1		2	PC	SW, PC BD TGL 8 IN-LINE SPST	P		13344			7936	
	092	01	30001000	6		1	PC	XFMR, PULSE COUPLING MEM DRVR	P						
	093	01	51825700	1		1	PC	OPTICAL ISOLATOR	P						
	094	01	51904105	7		1	PC	OSC, TTL DIP 6.745MHZ 500MW	P						
	096	01	51848404	3		1	PC	SOCKET, IC 24 POS D-I-L TIN	P						
	097	01	71486102	8		8	PC	BUS, PWR 11.35LG W/POSTS CU	P						
	098	01	71486101	0		4	PC	BUS, PWR 3.6LG W/POSTS CU	P						
	099	01	51906111	3		1	PC	CONN, 9 PIN PC MTD GOLD FIG 3	P						
	100	01	65832100	5		16	PC	SOCKET MINI SPRING	P						
	101	01	95642805	6		400	FT	WIR SLD 24GA TINNED	W						
	102	01	10129801	0		1	PC	WSHR, NO.4 SPG LOCK STL ZP	B						
	103	01	10125103	1		1	PC	NUT, HEX 4-40 MSCR STL ZP	B						
	104	01	92780084	7		1	PC	MSCR PAN SLT 4-40X5/16 SST P	B						
	105	01	16006500	9		REF	PC	FABRICATION SPECIFICATION	D						
	106	01	10121508	5		REF	PC	MARKING, INK STP-STENCIL-S/C	D						

BUILD ARC 210

ASSEMBLY PARTS LIST

PRINT DATE 07-03-79 | PAGE 6 | FILE CHANGE NO. 00013581

DIV. 0860 | ASSEMBLY NUMBER 90446088 | CD 8 | REV. C | DWG. D | DESCRIPTION PC CARD ASSY 9AVD | MC A | STATUS REL | STATUS DATE 02-19-79 | ENG. RESP. CC555M | FILE DATE 07-03-79

T | FIND NO | LI | PART NUMBER | CD | M | QUANTITY | U/M | PART DESCRIPTION | MC | YLD | ECO. NO. IN | ECO. NO. OUT | S/N | WK IN | WK OUT

	107	01	16019500	4		REF	PC	REQ/INSTALLATION OF EXT CKTS	D						
	108	01	62201025	4		REF	PC	LOG DIAG	D						
	109	01	24500075	7		5	PC	RES FXD COMP 3300 OHM 5P 1/4W	P						
	110	01	94379102	4		3	PC	RES SSIP NTWK 3300 R 3P 1.0W	P						
	111	01	24500061	7		1	PC	RES FXD COMP 820 OHM 5P 1/4W	P						
	112	01	24500059	1		1	PC	RES FXD COMP 680 OHM 5P 1/4W	P						
	113	01	51892316	4		1	PC	IC 1024BIT 256X4 BP-ROM ASSY	V						
	114	01	94375109	9		1	PC	RES SSIP NTWK 1000 R 3P 1.0W	P						
	115	01	52629949	0		3	FT	WIR WW 30GA SLD WHT UL KYNAR	W			13344			7936
	115	02	52629949	0		2	FT	WIR WW 30GA SLD WHT UL KYNAR	W		13344	13581		7936	7936
	115	03	52629949	0		2	FT	WIR WW 30GA SLD WHT UL KYNAR	W		13581			7936	
	117	01	24528619	0		400	FT	TBG, NO. 22 INS CLR UL PVC	B						
	118	01	61408352	5		1	PC	JUMPER WIRE ASSY	A						
	119	01	51862500	9		1	PC	SW, PC BD TGL 7 IN-LINE SPST	P		13344			7936	
								0119 TOTAL LINES							

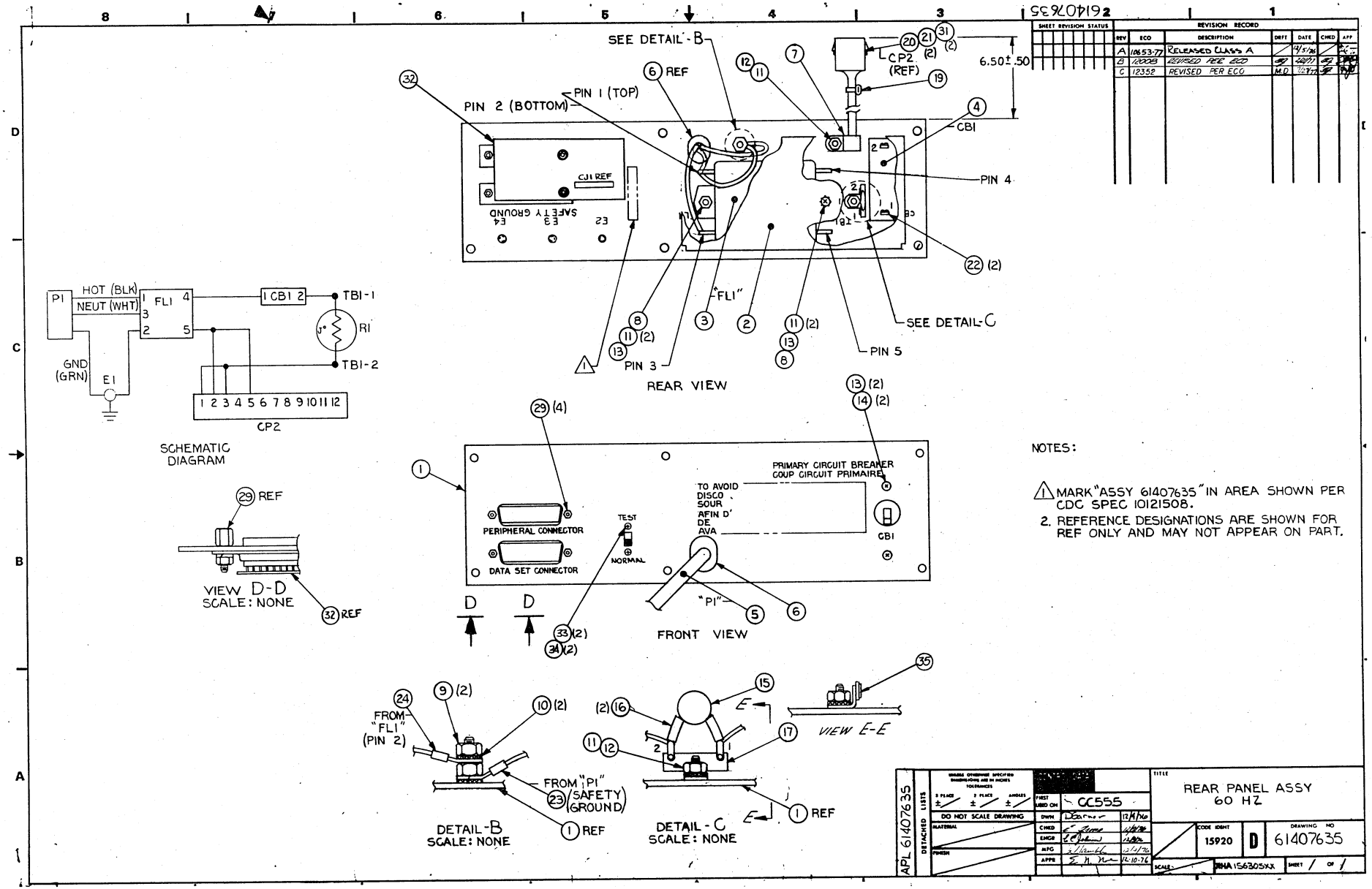

SEE DETAIL-B
PIN 2 (BOTTOM)
PIN 1 (TOP)
6 REF
CP2 (REF)
6.50±.50
CB1
PIN 4
CJ1 REF
SAFETY GROUND
E2
E3
E4
"FL1"
PIN 3
PIN 5
SEE DETAIL-C
REAR VIEW
P1
HOT (BLK)
NEUT (WHT)
FL1
CB1
TB1-1
TB1-2
R1
GND (GRN)
E1
CP2
SCHEMATIC DIAGRAM
VIEW D-D
SCALE: NONE
PRIMARY CIRCUIT BREAKER
COUP CIRCUIT PRIMAIRE
TO AVOID DISCO SOUR AFIN D' DE AVA
PERIPHERAL CONNECTOR
DATA SET CONNECTOR
TEST
NORMAL
"P1"
FRONT VIEW
FROM "FL1" (PIN 2)
FROM "P1" (SAFETY GROUND)
DETAIL-B
SCALE: NONE
DETAIL-C
SCALE: NONE
VIEW E-E
NOTES:
1. MARK "ASSY 61407635" IN AREA SHOWN PER CDC SPEC 10121508.
2. REFERENCE DESIGNATIONS ARE SHOWN FOR REF ONLY AND MAY NOT APPEAR ON PART.
REVISION RECORD
A 10653-77 RELEASED CLASS A
B 12008 REVISED PER ECO
C 12352 REVISED PER ECO
APL 61407635
DETACHED LISTS
DO NOT SCALE DRAWING
CC555
REAR PANEL ASSY 60 HZ
CODE IDENT 15920
D
61407635
SCALE
SHEET 1 OF 1

BUILD ARC 230

ASSEMBLY PARTS LIST

PRINT DATE 10-06-77 | PAGE 1 | FILE CHANGE NO. 00012332

DIV.	ASSEMBLY NUMBER	CD	REV.	DWG.	DESCRIPTION	MC	STATUS	STATUS DATE	ENG. RESP.	FILE DATE
0860	61407635	4	C	A	REAR PNL ASSY 60HZ	A	REL	12-15-76		09-15-77

T	FIND NO	LI	PART NUMBER	CD	M	QUANTITY	U/M	PART DESCRIPTION	MC	YLD	ECO. NO. IN	ECO. NO. OUT	S/N	WK IN	WK OUT
	001	01	71492220	0		.1	PC	PANEL, REAR 60HZ (CRS)	P						
	002	01	71491951	1		1	PC	COVER AC ENTRY PANEL	P						
	003	01	51899703	6		1	PC	FILTER, RFI 5A 115-275V SLD	P						
	004	01	95587003	5		1	PC	CB S-P 65VDC 3AMP	P						
	005	01	51899900	8		1	PC	CORD, 3 WIRE PWR UL 9FT GRA	P						
	006	01	36158909	6		1	PC	BUSHING, STRAIN-REL BLK NYL	B						
	007	01	51776603	6		1	PC	CLAMP, CBL (4) 3/16DIA NOM	B			12008			7708
	007	02	24565000	7		1	PC	CLAMP, 1/8DIA CABLE BLK NYLON	B		12008			7708	
	008	01	36053423	4		2	PC	STANDOFF, HEX CFS 6-32X2.500	P						
	009	01	10125108	0		3	PC	NUT HEX MCH 10-32 STL CP OR Z	B			12008			7708
	009	02	10125108	0		2	PC	NUT HEX MCH 10-32 STL CP OR Z	B		12008			7708	
	010	01	10126403	4		4	PC	WSHR NO.10 EXT TOOTH LK TYP A	B			12008			7708
	010	02	10126403	4		2	PC	WSHR NO.10 EXT TOOTH LK TYP A	B		12008			7708	
	011	01	10126401	8		6	PC	WSHR NO.6 EXT TOOTH LK TYP A	B						
	012	01	10125105	6		2	PC	NUT HEX MCH 6-32 STL CP OR ZP	B						
	013	01	10127111	2		4	PC	MSCR PAN PHL 6-32X 1/4	B						
	014	01	10126103	0		2	PC	WSHR NO.6 INTL TOOTH LOCK STL	B						
	015	01	51908602	9		1	PC	THMS, DISC 2.5 OHM 10P 14MW	P						
	016	01	51797414	3		167	FT	TBG, INS .066DIA T/W NAT TEF	B			12008			7708
	016	02	51797420	0		167	FT	TBG, INS .034DIA T/W NAT TEF	B		12008			7708	
	017	01	36085800	5		1	PC	STRIP, TERM LUG-TYPE (52)	P						
	018	01	61407630	5		REF	PC	W/L REAR PNL 60HZ	D						
	019	01	94277400	1		1	PC	STRAP CABLE TIE TYPE 1	B						

BUILD ARC 230

ASSEMBLY PARTS LIST

PRINT DATE 10-06-77 | PAGE 2 | FILE CHANGE NO. 00012332

DIV.	ASSEMBLY NUMBER	CD	REV.	DWG.	DESCRIPTION	MC	STATUS	STATUS DATE	ENG. RESP.	FILE DATE
0860	61407635	4	C	A	REAR PNL ASSY 60HZ	A	REL	12-15-76		09-15-77

T	FIND NO	LI	PART NUMBER	CD	M	QUANTITY	U/M	PART DESCRIPTION	MC	YLD	ECO. NO. IN	ECO. NO. OUT	S/N	WK IN	WK OUT
	020	01	51905905	9		1	PC	CONN RECPT 12 CONTACTS	P						
	021	01	51906200	4		2	PC	CONTACT, SKT 20-14GA STRIP T	P						
	022	01	17973606	1		2	PC	TERM, CRMP B 18-12 W/INS SPRT	P						
	023	01	51797236	0		1	PC	LUG, CRMP R TERM 16-14GA 10SS	B						
	024	01	51797217	0		1	PC	LUG, CRMP R TERM #22-18GA 10S	B						
	025	01	24528617	4		500	FT	TBG, INSUL NO.6 BLK UL PVC	B			12008			7708
	025	02	24528656	2		500	FT	TUBING INS SZ 5 BLACK	B		12008			7708	
	026	01	93464444	4		1 917	FT	WIR 16GA STRD YEL 300V UL PVC	W						
	027	01	93463444	5		500	FT	WIR 18GA STRD YEL 300V UL PVC	W						
	028	01	93463555	8		250	FT	WIR 18GA STRD GRN 300V UL PVC	W						
	029	01	94288024	6		4	PC	LKG DEVICE, CONN TYP 4 W/TYP3	P						
	030	01	61407631	3		1	PC	CABLE ASSY REAR PNL MONITOR	G			12008			7708
	031	01	51906201	2		2	PC	CONTACT, SKT 20-14GA STRIP T	P						
	032	01	90460695	1		1	PC	CD ASSY 6CTD=0	G						
	033	01	10126101	4		2	PC	INT TOOTH LK WSHR #4	B			11774			7737
	033	02	10125801	0		2	PC	WSHR NO.4 SPG LOCK STL CP	B		11774			7737	
	034	01	10127101	3		2	PC	MSCR PAN PHL 4-40X.187	B						
	035	01	51905201	3		083	FT	TAPE FABRIC TEFLON .375IN	B		12352			7740	
								0041 TOTAL LINES							

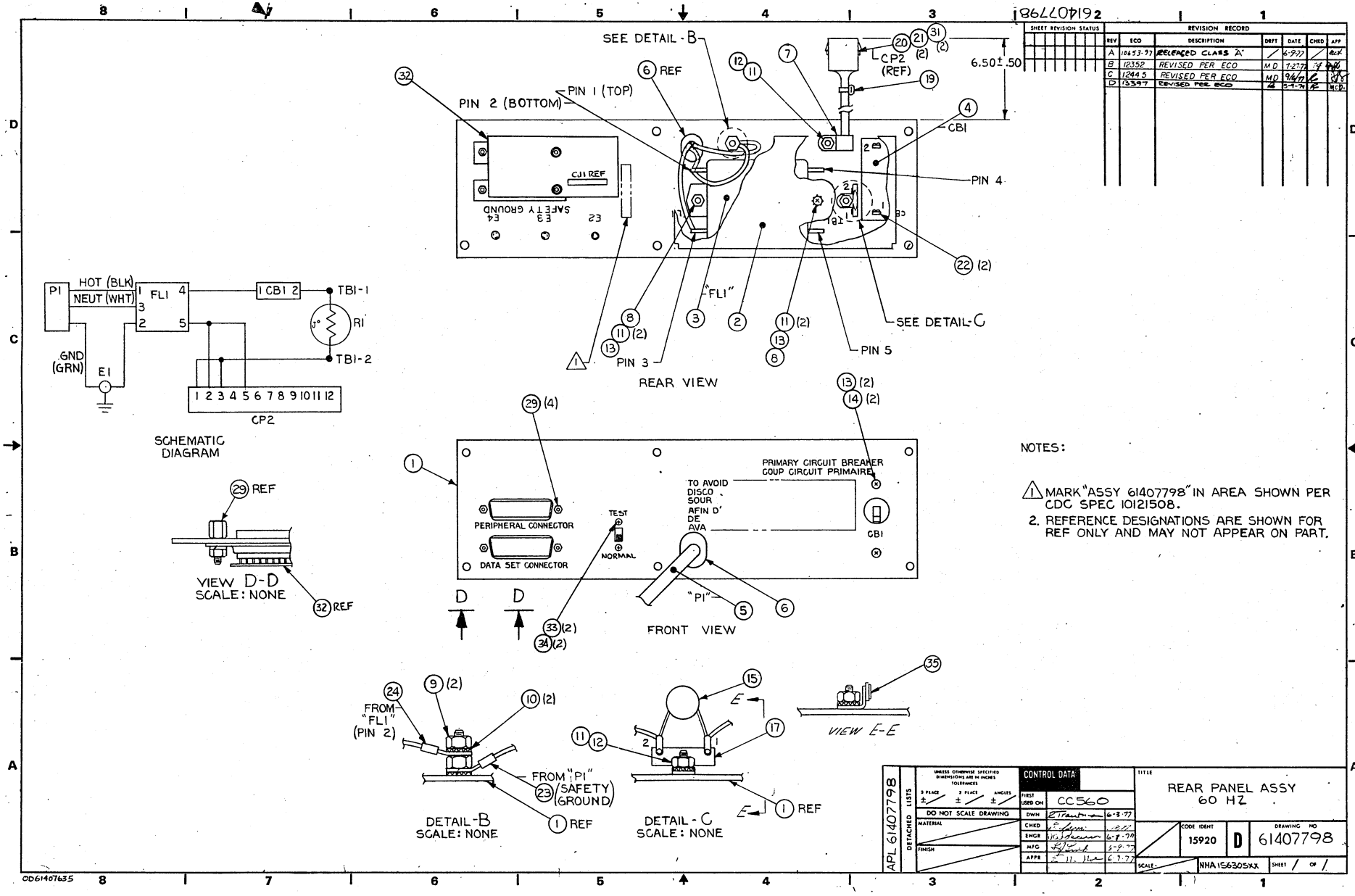

NOTES:

1. MARK "ASSY 61407798" IN AREA SHOWN PER CDC SPEC 10121508.
2. REFERENCE DESIGNATIONS ARE SHOWN FOR REF ONLY AND MAY NOT APPEAR ON PART.

REV	ECO	DESCRIPTION	DRFT	DATE	CHKD	APP
A	10653-97	RELEASED CLASS "A"	/	6-9-77	/	[illegible]
B	12352	REVISED PER ECO	MD	7-27-77	[illegible]	[illegible]
C	12445	REVISED PER ECO	MD	9/6/77	[illegible]	[illegible]
D	13397	REVISED PER ECO	[illegible]	5-9-77	[illegible]	MCD.

SHEET REVISION STATUS

REVISION RECORD

APL 61407798

DETACHED LISTS

UNLESS OTHERWISE SPECIFIED DIMENSIONS ARE IN INCHES TOLERANCES 3 PLACE ± 2 PLACE ± ANGLES ±

DO NOT SCALE DRAWING

MATERIAL

FINISH

CONTROL DATA

FIRST USED ON CC560

DWN E. Trautman 6-3-77

CHKD [illegible] 6-8-77

ENGR [illegible] 6-8-77

MFG [illegible] 6-9-77

APPR [illegible] 6-9-77

TITLE REAR PANEL ASSY 60 HZ

CODE IDENT 15920 D DRAWING NO 61407798

SCALE NHA 156305XX SHEET 1 OF 1

OD61407635

BUILD ARC 230

ASSEMBLY PARTS LIST

PRINT DATE	PAGE	FILE CHANGE NO.
04-09-79	1	00013397

DIV.	ASSEMBLY NUMBER	CD	REV.	DWG.	DESCRIPTION	MC	STATUS	STATUS DATE	ENG. RESP.	FILE DATE
0860	61407798		D	D	REAR PANEL ASSY 60HZ	A	REL	06-09-77		04-09-79

T	FIND NO.	LI	PART NUMBER	CD	M	QUANTITY	U/M	PART DESCRIPTION	MC	YLD	ECO. NO. IN	ECO. NO. OUT	S/N	WK IN	WK OUT
	001	01	71492220	0		1	PC	PANEL, REAR 60HZ (CHS)	P						
	002	01	71491951	1		1	PC	COVER AC ENTRY PANEL	P						
	003	01	51899703	6		1	PC	FILTER, RFI 5A 115-275V SLD	P						
	004	01	95587003	5		1	PC	CB S-P 65VDC 3AMP	P						
	005	01	51899900	8		1	PC	CORD, 3 WIRE PWR UL 9FT GRA	P						
	006	01	36158909	6		1	PC	BSHG, STRAIN-REL .630/.125 IN	B						
	007	01	24565000	7		1	PC	CLAMP, 1/8DIA CABLE BLK NYLON	B						
	008	01	36053423	4		2	PC	STANDOFF, HEX CFS 6-32X2.500	P						
	009	01	10125108	0		2	PC	NUT, HEX 10-32 MSCR STL ZP	B						
	010	01	10126403	4		2	PC	WSHR, NO.10 EXT/T LK STL ZP	B						
	011	01	10126401	8		6	PC	WSHR, NO.6 EXT/T LK STL ZP	B						
	012	01	10125105	6		2	PC	NUT, HEX 6-32 MSCR STL ZP	B						
	013	01	10127111	2		4	PC	MSCR PAN PHL 6-32X.250 STL ZP	B						
	014	01	10126103	4		2	PC	WSHR, NO.6 INTL/T LOCK STL ZP	B						
	015	01	51908602	9		1	PC	THMS, DISC 2.5 OHM 10P 14MM	P						
	016	01	51797420	0		167	FT	TBG, INS .034DIA T/W NAT TEF	B			13397			7916
	017	01	36085800	5		1	PC	STRIP, TERM LUG-TYPE (52)	P						
	018	01	61407630	5		REF	PC	W/L REAR PNL 60HZ	D						
	019	01	94277400	1		1	PC	STRAP, CBL TIE TYP 1 TO 5/8	B						
	020	01	51905905	9		1	PC	CONN RECPT 12 CONTACTS	P						
	021	01	51906209	4		2	PC	CONT, SKT 20-14GA .130IT STR	P						

BUILD ARC 230

ASSEMBLY PARTS LIST

PRINT DATE	PAGE	FILE CHANGE NO.
04-09-79	2	00013397

DIV.	ASSEMBLY NUMBER	CD	REV.	DWG.	DESCRIPTION	MC	STATUS	STATUS DATE	ENG. RESP.	FILE DATE
0860	61407798		D	D	REAR PANEL ASSY 60HZ	A	REL	06-09-77		04-09-79

T	FIND NO.	LI	PART NUMBER	CD	M	QUANTITY	U/M	PART DESCRIPTION	MC	YLD	ECO. NO. IN	ECO. NO. OUT	S/N	WK IN	WK OUT
	022	01	17973606	1		2	PC	TERM, CRMP B 18-12 W/INS SPRT	P						
	023	01	51797236	2		1	PC	LUG, CRMP R TERM 16-14GA 10SS	B						
	024	01	51797217	1		1	PC	LUG, CRMP R TERM #22-18GA 10S	B						
	025	01	24528656	2		500	FT	TUBING INS SZ 5 BLACK	B						
	026	01	93464444	4		1 917	FT	WIR 16GA STRD YEL 300V UL PVC	W						
	027	01	93463444	5		500	FT	WIR 18GA STRD YEL 300V UL PVC	W						
	028	01	93463555	8		250	FT	WIR 18GA STRD GRN 300V UL PVC	W						
	029	01	94288024	6		4	PC	LKG DEVICE, CONN TYP 4 W/TYP3	P						
	031	01	51906201	2		2	PC	CONT, SKT 20-14GA .200I T STR	P						
	032	01	90445796	7		1	PC	CD ASSY 6CTD=1	S						
	033	01	10126101	4		2	PC	WSHR, NO.4 INTL/T LOCK STL ZP	B			11774			7744
	033	02	10125801	0		2	PC	WSHR, NO.4 SPG LOCK STL ZP	B		11774			7744	
	034	01	10127101	3		2	PC	MSCR PAN PHL 4-40X.188 STL ZP	B						
	035	01	51905201	3		983	FT	TAPE FABRIC TEFLON .375IN	B		12352			7740	
								0035 TOTAL LINES							

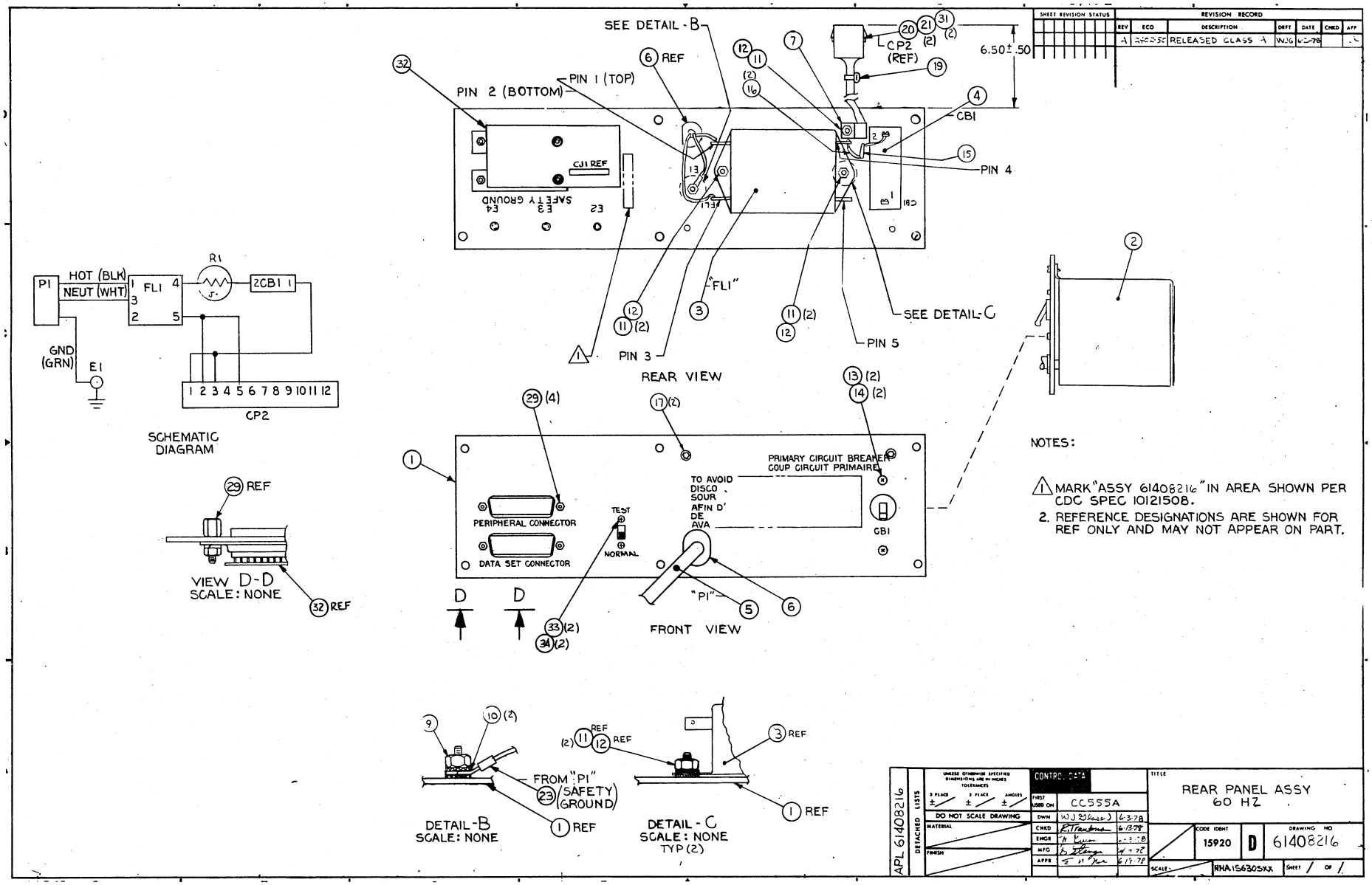
SHEET REVISION STATUS
REVISION RECORD
REV
ECO
DESCRIPTION
DRFT
DATE
CHKD
APP
A
RELEASED CLASS A
SEE DETAIL - B
6 REF
PIN 1 (TOP)
PIN 2 (BOTTOM)
CP2 (REF)
6.50 ± .50
CB1
PIN 4
CJ1 REF
SAFETY GROUND
E4
E3
E2
"FL1"
PIN 3
SEE DETAIL-C
PIN 5
REAR VIEW
P1
HOT (BLK)
NEUT (WHT)
FL1
R1
2CB1
GND (GRN)
E1
CP2
SCHEMATIC DIAGRAM
29 REF
VIEW D-D
SCALE: NONE
32 REF
PRIMARY CIRCUIT BREAKER
COUP CIRCUIT PRIMAIRE
TO AVOID DISCO SOUR AFIN D' DE AVA
PERIPHERAL CONNECTOR
DATA SET CONNECTOR
TEST
NORMAL
CB1
"P1"
FRONT VIEW
D
D
FROM "P1" (SAFETY GROUND)
DETAIL-B
SCALE: NONE
DETAIL - C
SCALE: NONE
TYP (2)
NOTES:
1. MARK "ASSY 61408216" IN AREA SHOWN PER CDC SPEC 10121508.
2. REFERENCE DESIGNATIONS ARE SHOWN FOR REF ONLY AND MAY NOT APPEAR ON PART.
APL 61408216
DETACHED LISTS
DO NOT SCALE DRAWING
CONTROL DATA
FIRST USED ON
CC555A
DWN
CHKD
ENGR
MFG
APPR
TITLE
REAR PANEL ASSY
60 HZ
CODE IDENT
15920
D
DRAWING NO
61408216
SCALE
RHA156305XX
SHEET 1 OF 1

BUILD ARC 230

ASSEMBLY PARTS LIST

PRINT DATE	PAGE	FILE CHANGE NO.
06-21-78	1	12402-50

DIV.	ASSEMBLY NUMBER	CD	REV.	DWG.	DESCRIPTION	MC	STATUS	STATUS DATE	ENG. RESP.	FILE DATE
0860	614X8216	2	A	D	REAR PANEL ASSY 60HZ	A	REL	06-20-78	CC555A	06-21-78

T	FIND NO	LI	PART NUMBER	CD	M	QUANTITY		U/M	PART DESCRIPTION	MC	YLD	ECO. NO. IN	ECO. NO. OUT	S/N	WK IN	WK OUT
	001	01	71492729	0		1		PC	PANEL-REAR	P						
	002	01	71492425	5		1		PC	COVER, AC ENTRY	P						
	003	01	51899703	6		1		PC	FILTER, RFI 5A 115-275V SLD	P						
	004	01	95587003	5		1		PC	CB S-P 65VDC 3AMP	P						
	005	01	51899900	8		1		PC	CORD, 3 WIRE PWR UL 9FT GRA	P						
	006	01	36158909	6		1		PC	BUSHING, STRAIN-REL BLK NYL	B						
	007	01	24565000	7		1		PC	CLAMP, 1/8DIA CABLE BLK NYLON	B						
	009	01	10125108	0		1		PC	NUT, HEX MSCR 10-32 STL CP/ZP	B						
	010	01	10126403	4		2		PC	WSHR NO.10 EXT TOOTH LK TYP A	B						
	011	01	10126401	8		5		PC	WSHR NO.6 EXT TOOTH LK TYP A	B						
	012	01	10125105	6		3		PC	NUT, HEX MSCR 6-32 STL CP/ZP	B						
	013	01	10127111	2		2		PC	MSCR PAN PHL 6-32X 1/4	B						
	014	01	10126103	0		2		PC	WSHR NO.6 INTL TOOTH LOCK STL	B						
	015	01	51908602	9		1		PC	THMS, DISC 2.5 OHM 10P 14MW	P						
	016	01	51797420	0			167	FT	TBG, INS .034DIA T/W NAT TEF	B						
	017	01	51858519	5		2		PC	SCR TPG HEX-WSHR SLT 6X3/8	B						
	018	01	61408220	4		REF		PC	W/L REAR PANEL 60HZ	D						
	019	01	94277400	1		1		PC	STRAP CABLE TIE TYPE 1	R						
	020	01	51905905	9		1		PC	CONN RECPT 12 CONTACTS	P						
	021	01	51906200	4		2		PC	CONTACT, SKT 20-14GA STRIP T	P						
	023	01	51797236	0		1		PC	LUG, CRMP R TERM 16-14GA 10SS	B						

BUILD ARC 230

ASSEMBLY PARTS LIST

PRINT DATE	PAGE	FILE CHANGE NO.
06-21-78	2	12402-50

DIV.	ASSEMBLY NUMBER	CD	REV.	DWG.	DESCRIPTION	MC	STATUS	STATUS DATE	ENG. RESP.	FILE DATE
0860	614X8216	2	A	D	REAR PANEL ASSY 60HZ	A	REL	06-20-78	CC555A	06-21-78

T	FIND NO	LI	PART NUMBER	CD	M	QUANTITY		U/M	PART DESCRIPTION	MC	YLD	ECO. NO. IN	ECO. NO. OUT	S/N	WK IN	WK OUT
	026	01	93464494	4		1	667	FT	WIR 16GA STRD YEL 300V UL PVC	W						
	027	01	93463494	5			500	FT	WIR 14GA STRD YEL 300V UL PVC	W						
	029	01	94288024	6		4		PC	LKG DEVICE, CONN TYP 4 W/TYP3	P						
	031	01	51906201	2		2		PC	CONTACT, SKT 20-14GA STRIP T	P						
	032	01	90445796	7		1		PC	CD ASSY 6CTD-1	S						
	033	01	10125801	0		2		PC	WSHR NO.4 SPG LOCK STL CP	B						
	034	01	10127101	3		2		PC	MSCR PAN PHL 4-40X.187	B						
									0028 TOTAL LINES							

DWN	TRAUTMAN	12-3-76	CONTROL DATA	TITLE W/L REAR PANEL ASSY 60HZ	PREFIX WL	DOCUMENT NO. 61407630	REV. A
CHKD	E. Grano	12/9/76					
ENG	E. Johnson	12/9/76					
MFG	C. Hamble	12/10/76		FIRST USED ON CC555	NHA 61407635	SHEET 1 of 2	
APPR	E. N. Noe	12-10-76	CODE IDENT 15920				

SHEET REVISION STATUS

2	1
A	A

REVISION RECORD

REV	ECO	DESCRIPTION	DRFT	DATE	APP
		RELEASED CLASS "C"			
A	10653-77	RELEASED CLASS A		12/15/76	M.C.T.

NOTES:
1. FOR FIND NO. IDENTIFICATION SEE APL 61407635.

DETACHED LISTS

AA3180 REV. 8/71 PRINTED IN U.S.A.

CONTROL DATA | CODE IDENT 15920 | SHEET 2 | WL | DOCUMENT NO. 61407630 | REV. A

CONDUCTOR IDENT.	FIND NO.	GAUGE (REF.)	COLOR (REF.)	LENGTH (APPROX)	ORIGIN		ACCESS FIND NO.	DESTINATION		ACCESS FIND NO.	REMARKS
1	5		0	3	P1			FL1	1	25	PWR CORD {HOT}
2	5		9	3	P1			FL1	3	25	PWR CORD {NEUT}
3	5		5	4	P1			E1		23	PWR CORD {GND}
4	26	16	4	3	FL1	4	25	CB1	1	22	HOT TO C.B.
5	26	16	4	3	CB1	2	22	TB1	1		HOT FROM C.B.
6	26	16	4	8	TB1	2		CP2	1	31,20	HOT FROM THERMISTOR TWO WIRES
7	27	18	4	3	CP2	1		CP2	3	21,20	HOT FROM SW.
8	26	16	4	9	FL1	5	25	CP2	2	31,20	NEUTRAL TWO WIRES
9	27	18	4	3	CP2	2		CP2	5	21,20	NEUTRAL
10	28	18	5	3	FL1	2	25	E1		24	GROUND

AA3183 REV. 8/71 PRINTED IN U.S.A.

DWN	W GLASER	5/78	CONTROL DATA	TITLE W/L REAR PANEL ASSY 60HZ	PREFIX WL	DOCUMENT NO. 61408220	REV A
CHKD	R. Trautman	6-13-78					
ENG	M. Quinn	6-13-78					
MFG	D. Deegan	6/14/78		FIRST USED ON CC555A	NHA 61408216	SHEET 1 of 2	
APPR	E H Noe	6-19-78	CODE IDENT 15920				

SHEET REVISION STATUS

2	1
A	A

REVISION RECORD

REV	ECO	DESCRIPTION	DRFT	DATE	APP
A	12402-50	RELEASED CLASS A	/	6/20/78	mck

NOTES:

1. For Find No. Identification See APL 61408216.

DETACHED LISTS

AA3180 REV. 8 71

PRINTED IN U.S.A.

CONTROL DATA — CODE IDENT 15920 — SHEET 2 — WL — DOCUMENT NO. 61408220 — REV. A

CONDUCTOR IDENT.	FIND NO.	GAUGE (REF.)	COLOR (REF.)	LENGTH (APPROX)	ORIGIN		ACCESS FIND NO.	DESTINATION		ACCESS FIND NO.	REMARKS
1	5		0	3	P1			FL1	1		PWR CORD {HOT}
2	5		9	3	P1			FL1	3		PWR CORD {Neut}
3	5		5	4	P1			E1		23	PWR CORD {GND}
4	15				FL1	4	16	CB1	2	16	HOT TO C.B.-THERMISTOR
5											
6	26	16	4	8	CB1	1		CP2	1	31,20	
7	27	18	4	3	CP2	1		CP2	3	21,20	HOT FROM SW.
8	26	16	4	9	FL1	5		CP2	2	31,20	NEUTRAL TWO WIRES
9	27	18	4	3	CP2	2		CP2	5	21,20	NEUTRAL

AA3183 REV. 8/71

PRINTED IN U.S.A.

SHEET REVISION STATUS	REVISION RECORD						
	REV	ECO	DESCRIPTION	DRFT	DATE	CHKD	APP
	–	——	RELEASED CLASS "C"	WJH	11-22-76		
	A	10653-77	RELEASED CLASS A		4/15/77		

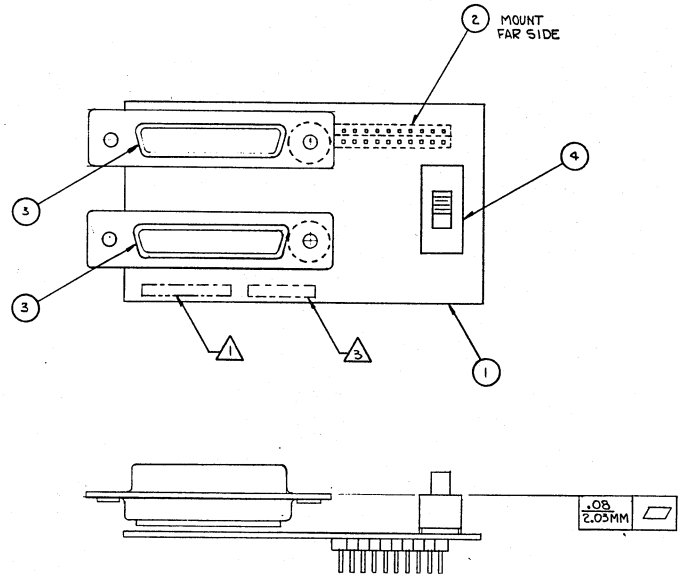

NOTES:

1. APPLY ASSY. NO, REV. LEVEL, AND LOC. CODE IN AREA SHOWN. MARK PER CDC SPEC 10121508; CHARACTER HEIGHT .12 (12 PT) COLOR, WHITE.
2. REFERENCE DESIGNATIONS AND FIND NUMBERS ARE FOR REFERENCE ONLY AND DO NOT APPEAR ON PART.
3. MARK SERIAL NO. IN AREA SHOWN PER CDC STD. 1.01.025 AND CDC SPEC 10121508 .12 HEIGHT, COLOR WHITE.

APL 90460695

DETACHED LISTS

UNLESS OTHERWISE SPECIFIED DIMENSIONS ARE IN INCHES
TOLERANCES
3 PLACE ± —— 2 PLACE ± —— ANGLES ± ——
DO NOT SCALE DRAWING
MATERIAL
FINISH

CONTROL DATA

FIRST USED ON	CC555-A	
DWN	W.J. HERMAN	11-22-76
CHKD		
ENGR		12/3/76
MFG		12/10/76
APPR		12-10-76
MECH		12-10-76

TITLE
P C CARD ASSEMBLY 6CTD-D
(REAR PANEL SIGNAL WIRING)

CODE IDENT 15920 | D | DRAWING NO 90460695

SCALE 2/1 | SHEET 1 OF 1

BUILD ARC 214

ASSEMBLY PARTS LIST

PRINT DATE	PAGE	FILE CHANGE NO.
09-27-77	1	10653-77

DIV.	ASSEMBLY NUMBER	CD	REV.	DWG.	DESCRIPTION	MC	STATUS	STATUS DATE	ENG. RESP.	FILE DATE
0860	90460695	1	A	D	CD ASSY 6CTD-0	0	REL	12-15-76	CC555	09-27-77

T	FIND NO	LI	PART NUMBER	CD	M	QUANTITY	U/M	PART DESCRIPTION	MC	YLD	ECO. NO. IN	ECO. NO. OUT	S/N	WK IN	WK OUT
	001	01	90460694	4		1	PC	PW-BD 6CTD-0 (REAR PNL SI0	P						
	002	01	76379306	4		2	PC	HEADER, 10PIN STRAIGHT PCB	P						
	003	01	53397914	2		2	PC	CONN, FEM 25POSN PLUG ALONE	P						
	004	01	51630901	0		1	PC	SW, DT DETENTED SLIDE FIG 2	P						
	005	01	62037500	6		24	PC	CONTACT SOC P.C. ITT	P						
	006	01	16006500	9		REF	PC	FABRICATION SPECIFICATION	D						
	007	01	90460693	6		REF	PC	SCH DIAG 6CTD-0	D						
								0007 TOTAL LINES							

SHEET REVISION STATUS	REVISION RECORD						
	REV	ECO	DESCRIPTION	DRFT	DATE	CHKD	APP
	A	1065394	RELEASED CLASS "A"	/	5/9/[illegible]	/	[illegible]

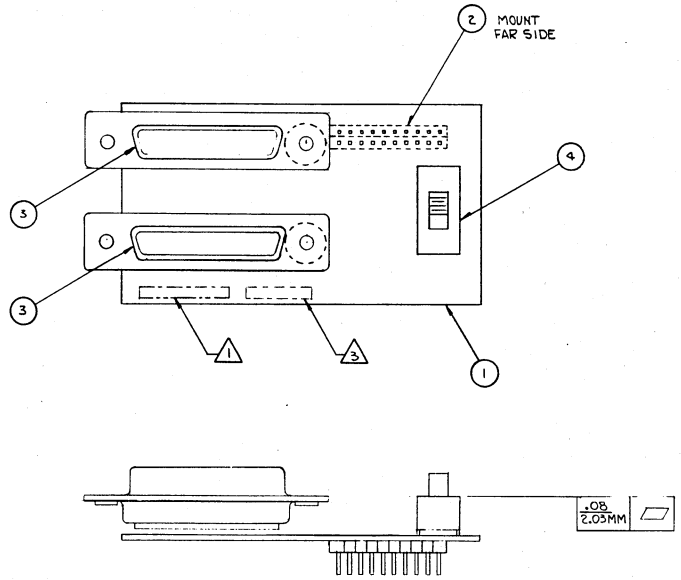

NOTES:

1. APPLY ASSY. NO., REV. LEVEL, AND LOC. CODE IN AREA SHOWN. MARK PER CDC SPEC 10121508; CHARACTER HEIGHT .12 (12 PT) COLOR, WHITE.
2. REFERENCE DESIGNATIONS AND FIND NUMBERS ARE FOR REFERENCE ONLY AND DO NOT APPEAR ON PART.
3. MARK SERIAL NO. IN AREA SHOWN PER CDC STD. 1.01.025 AND CDC SPEC 10121508, .12 HEIGHT, COLOR WHITE.

APL 90445796

DETACHED LISTS

UNLESS OTHERWISE SPECIFIED DIMENSIONS ARE IN INCHES TOLERANCES
3 PLACE ± — 2 PLACE ± — ANGLES ± —
DO NOT SCALE DRAWING
MATERIAL
FINISH

CONTRC

FIRST USED ON	CC560-A	
DWN	M. KIEAR	5-9-77
CHKD	[illegible]	5-10-77
ENGR	S.W. [illegible]	5-19-77
MFG	[illegible]	5-19-77
APPR	[illegible]	5-19-77
MECH	[illegible]	5-19-77

TITLE
P C CARD ASSEMBLY 6CTD-1
(REAR PANEL SIGNAL WIRING)

CODE IDENT 15920 | D | DRAWING NO 90445796

SCALE 2/1 | SHEET 1 OF 1

BUILD ARC 214

ASSEMBLY PARTS LIST

PRINT DATE	PAGE	FILE CHANGE NO.
09-27-77	1	10653-04

DIV.	ASSEMBLY NUMBER	CD	REV.	DWG.	DESCRIPTION	MC	STATUS	STATUS DATE	ENG. RESP.	FILE DATE
0860	90445796	7	A	D	CD ASSY 6CTD-1	G	REL	05-19-77	CC560-A	09-27-77

T	FIND NO	LI	PART NUMBER	CD	M	QUANTITY		U/M	PART DESCRIPTION	MC	YLD	ECO. NO. IN	ECO. NO. OUT	S/N	WK IN	WK OUT
	001	01	90445795	9		1		PC	PW BD 6CTD-1	P						
	002	01	76379306	4		2		PC	HEADER, 10PIN STRAIGHT PCB	P						
	003	01	53397914	2		2		PC	CONN, FEM 25POSN PLUG ALONE	P						
	004	01	51630901	0		1		PC	SW, DT DETENTED SLIDE FIG 2	P						
	005	01	62037500	6		24		PC	CONTACT SOC P.C. ITT	P						
	006	01	16006500	9		REF		PC	FABRICATION SPECIFICATION	D						
	007	01	90445794	2		REF		PC	SCH DIAG 6CTD-1	D						
									0007 TOTAL LINES							

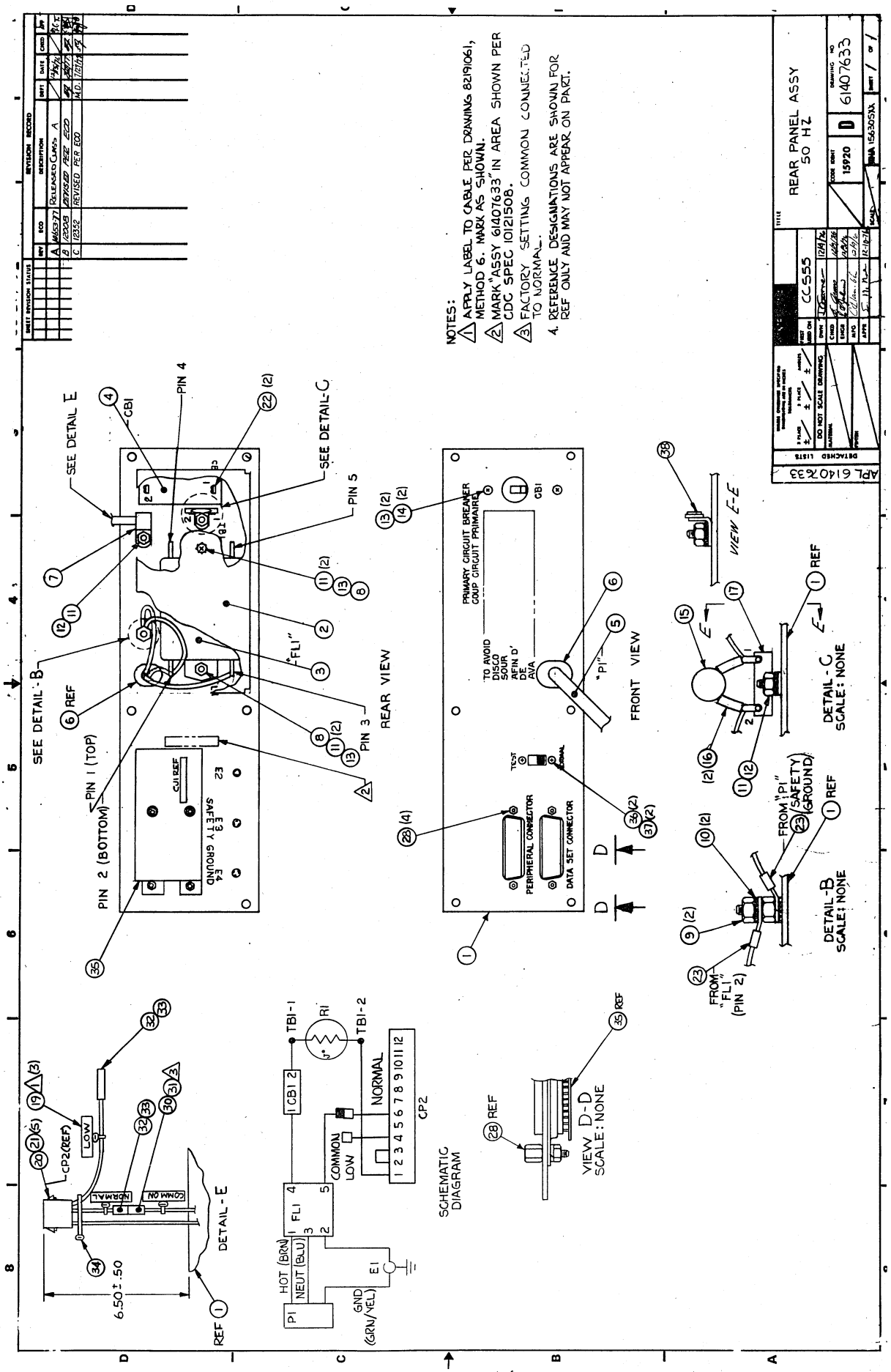
NOTES:
1. APPLY LABEL TO CABLE PER DRAWING 82191061, METHOD 6. MARK AS SHOWN.
2. MARK "ASSY 61407633" IN AREA SHOWN PER CDC SPEC 10121508.
3. FACTORY SETTING COMMON CONNECTED TO NORMAL.
4. REFERENCE DESIGNATIONS ARE SHOWN FOR REF ONLY AND MAY NOT APPEAR ON PART.
REAR PANEL ASSY 50 HZ
61407633
15920
CC555
APL 61407633
REAR VIEW
FRONT VIEW
VIEW E-E
DETAIL-C SCALE: NONE
DETAIL-B SCALE: NONE
VIEW D-D SCALE: NONE
SCHEMATIC DIAGRAM
DETAIL-E
PRIMARY CIRCUIT BREAKER COUP CIRCUIT PRIMAIRE
PERIPHERAL CONNECTOR
DATA SET CONNECTOR
SAFETY GROUND
NORMAL
COMMON
LOW
HOT (BRN)
NEUT (BLU)
GND (GRN/YEL)
6.50±.50
PIN 1 (TOP)
PIN 2 (BOTTOM)
PIN 3
PIN 4
PIN 5
SEE DETAIL-B
SEE DETAIL-C
SEE DETAIL E
REF
REVISION RECORD
SHEET REVISION STATUS
DETACHED LISTS
DO NOT SCALE DRAWING

BUILD ARC 230

ASSEMBLY PARTS LIST

PRINT DATE	PAGE	FILE CHANGE NO.
09-15-77	1	00012352

DIV.	ASSEMBLY NUMBER	CD	REV.	DWG.	DESCRIPTION	MC	STATUS	STATUS DATE	ENG. RESP.	FILE DATE
0860	61407633	9	C	U	PANEL ASSY REAR 50HZ	A	REL	12-15-76		09-15-77

T	FIND NO	LI	PART NUMBER	CD	M	QUANTITY	U/M	PART DESCRIPTION	MC	YLD	ECO. NO. IN	ECO. NO. OUT	S/N	WK IN	WK OUT
	001	01	71492221	8		1	PC	PANEL, REAR 50HZ (CRS)	P						
	002	01	71491951	1		1	PC	COVER AC ENTRY PANEL	P						
	003	01	51899703	6		1	PC	FILTER, RFI 5A 115-275V SLD	P						
	004	01	95587002	7		1	PC	CB 3-P 250VDC 2.0 AMP	P						
	005	01	71446500	2		1	PC	CBL ASSY(AC PWR)WIRE PREP50HZ	G						
	006	01	36158910	4		1	PC	BUSHING, STRAIN-REL BLK NYL	B						
	007	01	51776603	6		1	PC	CLAMP, CBL (4) 3/16DIA NOM	B			12008			7708
	007	02	24565000	7		1	PC	CLAMP, 1/8DIA CABLE BLK NYLON	B		12008			7708	
	008	01	36053423	4		2	PC	STANDOFF, HEX CFS 6-32X2.500	P						
	009	01	10125108	0		3	PC	NUT HEX MCH 10-32 STL CP OR Z	B			12008			7708
	009	02	10125108	0		2	PC	NUT HEX MCH 10-32 STL CP OR Z	B		12008			7708	
	010	01	10126403	4		4	PC	WSHR NO.10 EXT TOOTH LK TYP A	B			12008			7708
	010	02	10126403	4		2	PC	WSHR NO.10 EXT TOOTH LK TYP A	B		12008			7708	
	011	01	10126401	8		6	PC	WSHR NO.6 EXT TOOTH LK TYP A	B						
	012	01	10125105	6		2	PC	NUT HEX MCH 6-32 STL CP OR ZP	B						
	013	01	10127111	2		4	PC	MSCR PAN PHL 6-32X 1/4	B						
	014	01	10126103	0		2	PC	WSHR NO.6 INTL TOOTH LOCK STL	B						
	015	01	51908602	9		1	PC	THMS, DISC 2.5 OHM 10P 14MW	P						
	016	01	51797414	3		167	FT	TBG, INS .066DIA T/W NAT TEF	B			12008			7708
	016	02	51797420	0		167	FT	TBG, INS .034DIA T/W NAT TEF	B		12008			7708	
	017	01	36085800	5		1	PC	STRIP, TERM LUG-TYPE (52)	P						
	018	01	61407632	1		REF	PC	W/L REAR PNL	D						
	019	01	94277409	2		3	PC	STRAP CABLE TIE TYPE 6	B						

BUILD ARC 230

ASSEMBLY PARTS LIST

PRINT DATE	PAGE	FILE CHANGE NO.
09-15-77	2	00012352

DIV.	ASSEMBLY NUMBER	CD	REV.	DWG.	DESCRIPTION	MC	STATUS	STATUS DATE	ENG. RESP.	FILE DATE
0860	61407633	9	C	U	PANEL ASSY REAR 50HZ	A	REL	12-15-76		09-15-77

T	FIND NO	LI	PART NUMBER	CD	M	QUANTITY	U/M	PART DESCRIPTION	MC	YLD	ECO. NO. IN	ECO. NO. OUT	S/N	WK IN	WK OUT
	020	01	51905905	9		1	PC	CONN RECPT 12 CONTACTS	P						
	021	01	51906200	4		5	PC	CONTACT, SKT 20-14GA STRIP T	P						
	022	01	17973606	1		2	PC	TERM, CRMP R 18-12 W/INS SPRT	P						
	023	01	51797217	0		2	PC	LUG, CRMP R TERM #22-18GA 10S	B						
	024	01	24528617	4		500	FT	TBG, INSUL NO.6 BLK UL PVC	B			12008			7708
	024	02	24528656	2		500	FT	TUBING INS SZ 5 BLACK	B		12008			7708	
	025	01	93464444	4		2	500	FT	#IR 16GA STRD YEL 300V UL PVC	W					
	026	01	93463444	5		250	FT	WIR 18GA STRD YEL 300V UL PVC	W						
	027	01	93463555	8		250	FT	WIR 18GA STRD GRN 300V UL PVC	W						
	028	01	94288024	6		4	PC	LKG DEVICE, CONN TYP 4 W/TYP3	P						
	029	01	61407631	3		1	PC	CABLE ASSY REAR PNL MONITOR	G			12008			7708
	030	01	93948009	1		1	PC	CONNECTOR 1 PIN HOUSING	P						
	031	01	62021406	4		1	PC	CONTACT PIN 20-14 AWG BRASS	P						
	032	01	93947010	0		2	PC	CONN 1 SKT HOUSING	P						
	033	01	62021509	5		2	PC	CONT SKT 20-14GA PB CSF STRIP	P						
	034	01	94277400	1		1	PC	STRAP CABLE TIE TYPE 1	B						
	035	01	90460695	1		1	PC	CD ASSY 6CTC-0	G						
	036	01	10127101	3		2	PC	MSCR PAN PHL 4-40X.187	B						
	037	01	10126101	4		2	PC	INT TOOTH LK WSHR #4	B			11774			7737
	037	02	10125801	0		2	PC	WSHR NO.4 SPG LOCK STL CP	B		11774			7737	
	038	01	51905201	3		083	FT	TAPE FABRIC TEFLON .375IN	B		12352			7740	

BUILD ARC 230

ASSEMBLY PARTS LIST

PRINT DATE	PAGE	FILE CHANGE NO.
09-15-77	3	00012352

DIV.	ASSEMBLY NUMBER	CD	REV.	DWG.	DESCRIPTION	MC	STATUS	STATUS DATE	ENG. RESP.	FILE DATE
0860	61407633	9	C	U	PANEL ASSY REAR 50HZ	A	REL	12-15-76		09-15-77

T	FIND NO	LI	PART NUMBER	CD	M	QUANTITY	U/M	PART DESCRIPTION	MC	YLD	ECO. NO. IN	ECO. NO. OUT	S/N	WK IN	WK OUT
								0044 TOTAL LINES							

DWN	R Trautman	4-77	CONTROL DATA	TITLE	PREFIX	DOCUMENT NO.	REV.
CHKD				CONN, JUMPER PLUG ASSY	A	61407743 THRU 61407747	C
ENG				FIRST USED ON	NHA	SHEET	
MFG		6-15-77	CODE IDENT 15920	CC617 C	66304162	1 of 2	
APPR		6-16-77					

SHEET REVISION STATUS

2	1
A	A
A	B
A	C

REVISION RECORD

REV	ECO	DESCRIPTION	DRFT	DATE	APP
-	50000-37	RELEASED CLASS B	-	5/4/77	[illegible]
A	10842-66	RELEASED CLASS A	/	6-16-77	[illegible]
B	12419	APL CHANGE ONLY	EE	8/12/77	[illegible]
C	12461	REVISED PER ECO	EE	9/1/77	[illegible]

NOTES:

1. MARK WITH WHITE DOT TO DESIGNATE PIN NO. 1,
2. MARK "A02A" APPROXIMATELY AS SHOWN PER CDC SPEC 10121508.
3. MARK ASSEMBLY NUMBER IN AREA SHOWN PER CDC SPEC 10121508.

APL 61407744
APL 61407743
DETACHED LISTS

AA3180 REV. 8/71

PRINTED IN U.S.A.

CONTROL DATA		CODE IDENT 15920	SHEET 2	A	DOCUMENT NO. 61407743	REV. A

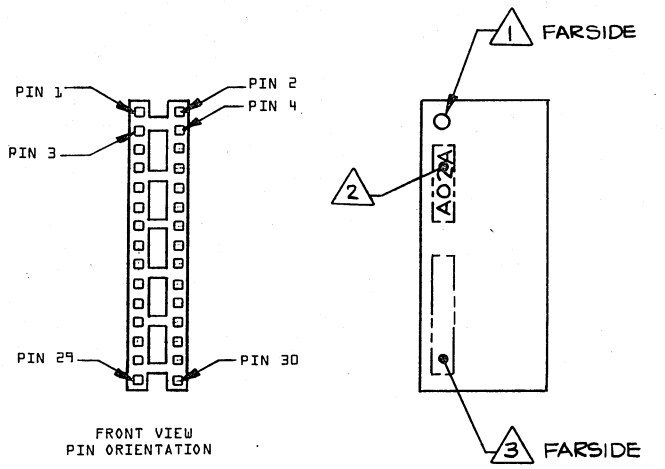

FRONT VIEW
PIN ORIENTATION

AA3185

PRINTED IN U.S.A.

BUILD ARC 104

ASSEMBLY PARTS LIST

PRINT DATE	PAGE	FILE CHANGE NO.
01-12-78	1	00012461

DIV.	ASSEMBLY NUMBER	CD	REV.	DWG.	DESCRIPTION	MC	STATUS	STATUS DATE	ENG. RESP.	FILE DATE
0860	61407743	6	C	A	CONN JUMPER PLUG ASSY	A	REL	06-16-77	CC617C	01-12-78

T	FIND NO	LI	PART NUMBER	CD	M	QUANTITY		U/M	PART DESCRIPTION	MC	YLD	ECO. NO. IN	ECO. NO. OUT	S/N	WK IN	WK OUT
	001	01	51911100	9		1		PC	CONN HOUSING POLARIZING KEY	P						
	002	01	18563109	0		1	333	FT	WIRE 26 GA THIN WALL INS 300V	W						
	003	02	51911200	7		14		PC	CONTACT SOCKET 20-24 AWG	P		12419			7734	
	004	01	51911201	5		8		PC	CONTACT SOCKET 26-30 AWG	P						
	005	01	61407748	5		REF		PC	W/L CONN JUMPER PLUG	D						
									0005 TOTAL LINES							

BUILD ARC 104

ASSEMBLY PARTS LIST

PRINT DATE	PAGE	FILE CHANGE NO.
08-25-77	1	00012401

DIV.	ASSEMBLY NUMBER	CD	REV.	DWG.	DESCRIPTION	MC	STATUS	STATUS DATE	ENG. RESP.	FILE DATE
0860	61407744	4	C	A	CONN JUMPER PLUG ASSY	A	REL	06-16-77	CC617C	08-25-77

T	FIND NO	LI	PART NUMBER	CD	M	QUANTITY		U/M	PART DESCRIPTION	MC	YLD	ECO. NO. IN	ECO. NO. OUT	S/N	WK IN	WK OUT
	001	01	51911100	9		1		PC	CONN HOUSING POLARIZING KEY	P						
	002	01	18563109	0		1	333	FT	WIRE 26 GA THIN WALL INS 300V	W						
	003	01	51911200	7		14		PC	CONTACT SOCKET 20-24 AWG	P						
	004	01	51911201	5		8		PC	CONTACT SOCKET 26-30 AWG	P						
	005	01	61407853	3		REF		PC	W/L	D						
									0005 TOTAL LINES							

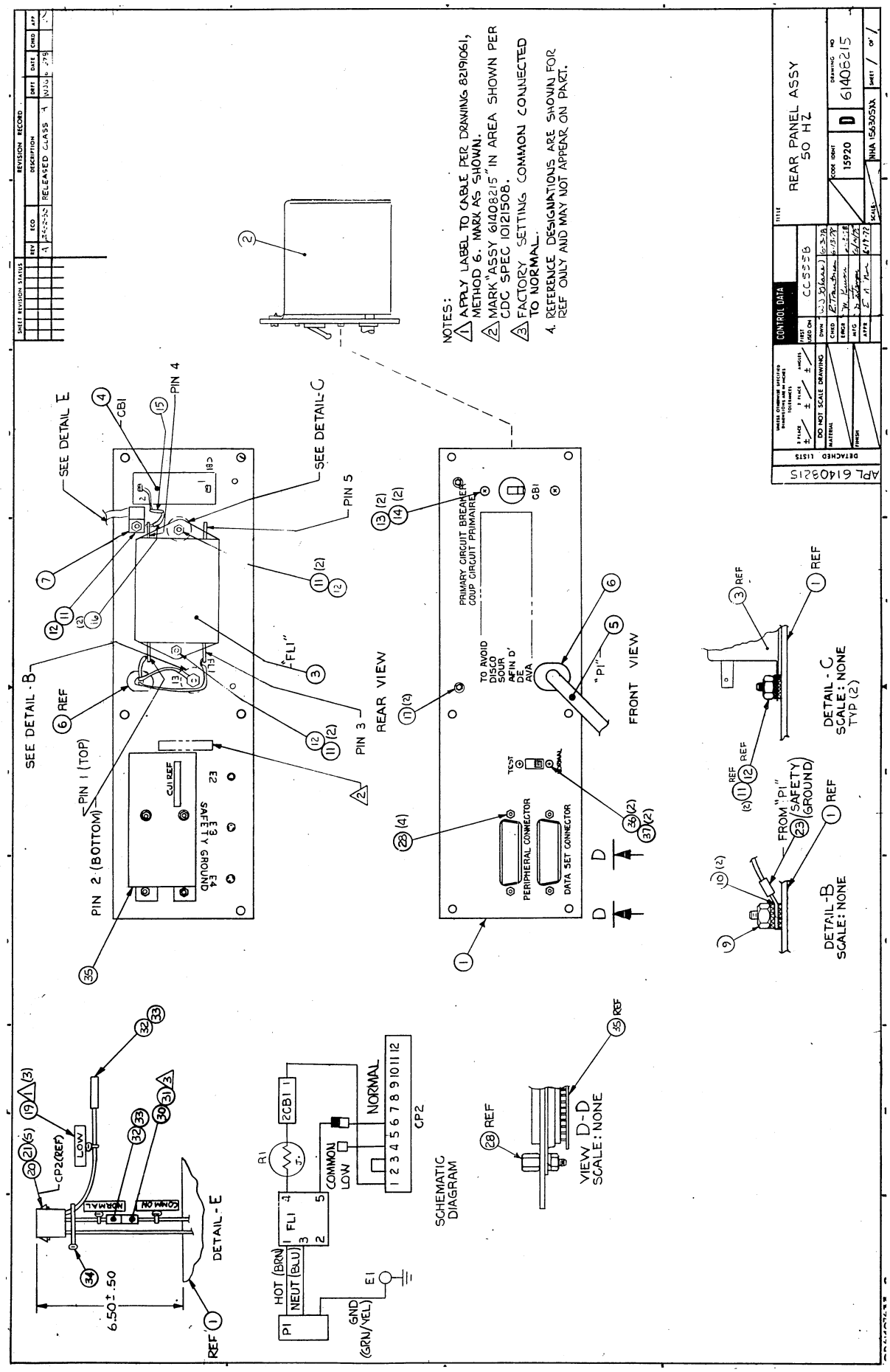
NOTES:
1. APPLY LABEL TO CABLE PER DRAWING 82191061, METHOD 6. MARK AS SHOWN.
2. MARK "ASSY 61408215" IN AREA SHOWN PER CDC SPEC 10121508.
3. FACTORY SETTING COMMON CONNECTED TO NORMAL.
4. REFERENCE DESIGNATIONS ARE SHOWN FOR REF ONLY AND MAY NOT APPEAR ON PART.
REAR PANEL ASSY 50 HZ
CONTROL DATA
DETACHED LISTS
APL 61408215
15920
D
61408215
NHA 156305XX
REVISION RECORD
RELEASED CLASS A
SEE DETAIL E
SEE DETAIL-C
SEE DETAIL-B
PIN 1 (TOP)
PIN 2 (BOTTOM)
PIN 3
PIN 4
PIN 5
REAR VIEW
FRONT VIEW
PRIMARY CIRCUIT BREAKER
COUP CIRCUIT PRIMAIRE
TO AVOID DISCO SOUR AFIN D' DE AVA
PERIPHERAL CONNECTOR
DATA SET CONNECTOR
SAFETY GROUND
DETAIL-C SCALE: NONE TYP (2)
DETAIL-B SCALE: NONE
FROM "P1" (SAFETY) (GROUND)
DETAIL-E
6.50±.50
SCHEMATIC DIAGRAM
HOT (BRN)
NEUT (BLU)
GND (GRN/YEL)
COMMON
LOW
NORMAL
VIEW D-D SCALE: NONE

BUILD ARC 230

ASSEMBLY PARTS LIST

PRINT DATE	PAGE	FILE CHANGE NO.
06-21-78	1	12402-50

DIV.	ASSEMBLY NUMBER	CD	REV.	DWG.	DESCRIPTION	MC	STATUS	STATUS DATE	ENG. RESP.	FILE DATE
0860	61408215	4	A	D	REAR PANEL ASSY 50HZ	A	REL	06-20-78	CC5558	06-21-78

T	FIND NO	LI	PART NUMBER	CD	M	QUANTITY		U/M	PART DESCRIPTION	MC	YLD	ECO. NO. IN	ECO. NO. OUT	S/N	WK IN	WK OUT
	001	01	71492730	8		1		PC	PANEL-REAR	P						
	002	01	71492425	5		1		PC	COVER, AC ENTRY	P						
	003	01	51899703	6		1		PC	FILTER, RFI 5A 115-275V SLD	P						
	004	01	95587002	7		1		PC	CB S-P 250VDC 2.0 AMP	P						
	005	01	71446500	2		1		PC	CBL ASSY(AC PWR)WIRE PREP50HZ	G						
	006	01	36158910	4		1		PC	BUSHING, STRAIN-REL BLK NYL	B						
	007	01	24565000	7		1		PC	CLAMP, 1/8DIA CABLE BLK NYLON	B						
	009	01	10125108	0		1		PC	NUT, HEX MSCR 10-32 STL CP/ZP	B						
	010	01	10126403	4		2		PC	WSHR NO.10 EXT TOOTH LK TYP A	B						
	011	01	10126401	8		5		PC	WSHR NO.6 EXT TOOTH LK TYP A	B						
	012	01	10125105	6		3		PC	NUT, HEX MSCR 6-32 STL CP/ZP	B						
	013	01	10127111	2		2		PC	MSCR PAN PHL 6-32X 1/4	B						
	014	01	10126103	0		2		PC	WSHR NO.6 INTL TOOTH LOCK STL	B						
	015	01	51908602	9		1		PC	THMS, DISC 2.5 OHM 10P 14MW	P						
	016	01	51797420	0			167	FT	TBG, INS .034DIA T/W NAT TEF	B						
	017	01	51858519	5		2		PC	SCR TPG HEX-WSHR SLT 6X3/8	B						
	018	01	61408219	6		REF		PC	W/L REAR PANEL	D						
	019	01	94277409	2		3		PC	STRAP CABLE TIE TYPE 6	B						
	020	01	51905905	9		1		PC	CONN RECPT 12 CONTACTS	P						
	021	01	51906200	4		5		PC	CONTACT, SKT 20-14GA STRIP T	P						
	023	01	51797217	0		1		PC	LUG, CRMP R TERM .22-18GA 10S	B						

BUILD ARC 230

ASSEMBLY PARTS LIST

PRINT DATE	PAGE	FILE CHANGE NO.
06-21-78	2	12402-50

DIV.	ASSEMBLY NUMBER	CD	REV.	DWG.	DESCRIPTION	MC	STATUS	STATUS DATE	ENG. RESP.	FILE DATE
0860	61408215	4	A	D	REAR PANEL ASSY 50HZ	A	REL	06-20-78	CC5558	06-21-78

T	FIND NO	LI	PART NUMBER	CD	M	QUANTITY		U/M	PART DESCRIPTION	MC	YLD	ECO. NO. IN	ECO. NO. OUT	S/N	WK IN	WK OUT
	025	01	93464444	4		2	250	FT	WIR 16GA STRD YEL 300V UL PVC	W						
	026	01	93463444	5			250	FT	WIR 18GA STRD YEL 300V UL PVC	W						
	028	01	94288024	6		4		PC	LKG DEVICE, CONN TYP 4 W/TYP3	P						
	030	01	93948009	1		1		PC	CONNECTOR 1 PIN HOUSING	P						
	031	01	62021406	4		1		PC	CONTACT PIN 20-14 AWG BRASS	P						
	032	01	93947010	0		2		PC	CONN 1 SKT HOUSING	P						
	033	01	62021509	5		2		PC	CONT SKT 20-14GA PB CSF STRIP	P						
	034	01	94277400	1		1		PC	STRAP CABLE TIE TYPE 1	B						
	035	01	90445796	7		1		PC	CD ASSY 6CTD-1	S						
	036	01	10127101	3		2		PC	MSCR PAN PHL 4-40X.187	B						
	037	01	10126101	4		2		PC	INT TOOTH LK WSHR #4	B						
									0032 TOTAL LINES							

DWN	TRAUTMAN	12-3-76	CONTROL DATA	TITLE W/L REAR PANEL ASSY 50HZ	PREFIX WL	DOCUMENT NO. 61407632	REV. A
CHKD		12/7/76					
ENG		12/8/76					
MFG		12/10/76					
APPR	E. N. Mac	12-10-76	CODE IDENT 15920	FIRST USED ON CC555	NHA 61407633	SHEET 1 of 2	

SHEET REVISION STATUS		REVISION RECORD					
2	1	REV	ECO	DESCRIPTION	DRFT	DATE	APP
				RELEASED CLASS "C"			
A	A	A	10653-77	RELEASED CLASS A		12/15/76	M.C.T.

NOTES:

1. For find no. identification see APL 61407633.

2. Common connected to normal for input voltage range of 216V to 268V.
Common connected to low for input voltage range of 198V to 246V.
Factory setting common connected to normal.

DETACHED LISTS

AA3180 REV. 8/71

PRINTED IN U.S.A.

CONTROL DATA	CODE IDENT 15920	SHEET 2	WL	DOCUMENT NO. 61407632	REV. A

CONDUCTOR IDENT.	FIND NO.	GAUGE (REF.)	COLOR (REF.)	LENGTH (APPROX)	ORIGIN		ACCESS FIND NO.	DESTINATION		ACCESS FIND NO.	REMARKS
1	5		1		P1			FL1	1	24	PWR CORD (HOT)
2	5		6		P1			FL1	3	24	PWR CORD (NEUT)
3	5		5/4		P1			E1		23	PWR CORD (GND)
4	25	16	4	3	FL1	4	24	CB1	1	22	HOT TO C.B.
5	25	16	4	3	CB1	2	22	TB1	1		HOT FROM C.B.
6	25	16	4	8	TB1	2		CP2	1	20,21	HOT FROM THERMISTOR
7	25	16	4	8	FL1	5	24	COMMON		30,31	NEUTRAL TO NORMAL/LOW JUMPER (2)
8	25	16	4	4	NORMAL		32,33	CP2	6	20,21	NEUTRAL (NORMAL JUMPER) (2)
9	25	16	4	4	LOW		32,33	CP2	4	20,21	NEUTRAL (LOW JUMPER) (2)
10	26	18	4	3	CP2	2	20,21	CP2	3	20,21	JUMPER
11	27	18	5	3	FL1	2	24	E1		23	GROUND

AA3183 REV. 8/71

PRINTED IN U.S.A.

DWN	W GLASER	5/78	CONTROL DATA	TITLE	PREFIX	DOCUMENT NO.	REV.
CHKD	R. Trautman	6-13-78		W/L REAR PANEL ASSY 50HZ	WL	61408219	A
ENG	M Guyon	6-13-78					
MFG	D Stange	6/16/78		FIRST USED ON	NHA		
APPR	E. N. Noe	6-19-78	CODE IDENT 15920	CC555B	61408215	SHEET 1 of 2	

SHEET REVISION STATUS

2	1
A	A

REVISION RECORD

REV	ECO	DESCRIPTION	DRFT	DATE	APP
A	12402-50	RELEASED CLASS A	/	6-20-78	mcf

NOTES:
1. For find no identification see APL 61408215.
2. Common connected to normal for input voltage range of 216V to 268V.
Common connected to low for input voltage range of 198V to 246V.
Factory setting common connected to normal.

DETACHED LISTS

AA3180 REV. 8/71 PRINTED IN U.S.A.

CONTROL DATA

CODE IDENT	SHEET		DOCUMENT NO.	REV.
15920	2	WL	61408219	A

CONDUCTOR IDENT.	FIND NO.	GAUGE (REF.)	COLOR (REF.)	LENGTH (APPROX)	ORIGIN		ACCESS FIND NO.	DESTINATION		ACCESS FIND NO.	REMARKS
1	5		1		P1			FL1	1		PWR CORD {HOT}
2	5		6		P1			FL1	3		PWR CORD {NEUT}
3	5		5/4		P1			E1		23	PWR CORD {GND}
4	15				FL1	4	16	CB1	2	16	HOT TO C.B.-THERMISTOR
5											
6	25	16	4	8	CB1	1		CP2	1	20,21	
7	25	16	4	8	FL1	5		COMMON		30,31	NEUTRAL TO NORMAL/LOW JUMPER 2
8	25	16	4	4	NORMAL		32,33	CP2	6	20,21	NEUTRAL {NORMAL JUMPER} 2
9	25	16	4	4	LOW		32,33	CP2	4	20,21	NEUTRAL {LOW JUMPER} 2
10	26	18	4	3	CP2	2	20,21	CP2	3	20,21	JUMPER

AA3183 REV. 8/71 PRINTED IN U.S.A.

SHEET REVISION STATUS	REVISION RECORD						
	REV	ECO	DESCRIPTION	DRFT	DATE	CHKD	APP
	/	/	RELEASED CLASS C	/	10/16/75	/	[illegible]
	01	C654	REMOVED NOTE 2	[illegible]	3/13/76	[illegible]	[illegible]
	A	10653-33	RELEASED CLASS A	/	2/13/76	/	[illegible]

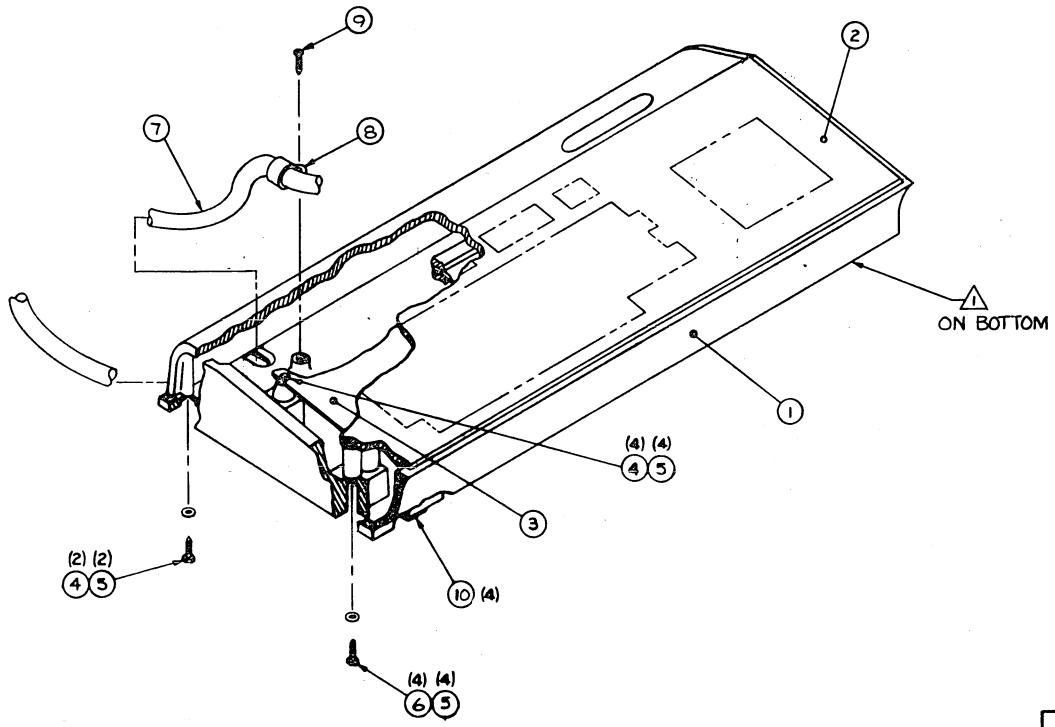

NOTES:
1. MARK "ASSY 61402100" PER CDC SPEC 10121508.

APL 61402100	DETACHED LISTS	UNLESS OTHERWISE SPECIFIED DIMENSIONS ARE IN INCHES TOLERANCES 3 PLACE ± 2 PLACE ± ANGLES ±	TITLE KEYBOARD ASSEMBLY 80 KEY
		DO NOT SCALE DRAWING	CODE IDENT 15920 D DRAWING NO 61402100
		MATERIAL	SCALE NHA 156292 XX SHEET / OF /
		FINISH	
		PROJECT NUMBER CC5B1C/D	
		DRAWN BY R Trautman 10-8-75	
		CHECKED BY [illegible] 10/10/75	
		ENGINEER [illegible] 10/16/75	
		APPROVED E. H. [illegible] 2-12-76	

BUILD ARC 440

ASSEMBLY PARTS LIST

PRINT DATE	PAGE	FILE CHANGE NO.
05-04-76	1	10653-83

DIV.	ASSEMBLY NUMBER	CD	REV.	DWG.	DESCRIPTION	MC	STATUS	STATUS DATE	ENG. RESP.	FILE DATE
0860	61402100	A	A	D	KEYBOARD ASSY (80 KEY)	N	REL	02-13-76	CC5B1A-D	05-04-76

T	FIND NO	LI	PART NUMBER	CD	M	QUANTITY	U/M	PART DESCRIPTION	MC	YLD	ECO. NO. IN	ECO. NO. OUT	S/N	WK IN	WK OUT
	001	01	71453200	9		1	PC	BASE KEYBOARD	P						
	002	01	71486900	5		1	PC	COVER KEYBOARD	P						
	003	01	51915401	7		1	PC	KEYBOARD 80 KEY	P						
	004	01	00860303	7		6	PC	MSCR SELF-LKG HEX HD 6-32X3/8	B						
	005	01	10125605	5		10	PC	WSHR NO.6 TYP A PLAIN STL CP	B						
	006	01	00860304	5		4	PC	MSCR SELF-LKG HEX HD 6-32X1/2	B						
	007	01	61370500	3		1	PC	CABLE ASSY(KEYBOARD-EXTERNAL)	A						
	008	01	24565003	1		1	PC	CLAMP, 5/16DIA CABLE BLK NYLO	B						
	009	01	1860790	8	3	1	PC	SCR, TPG IND/HEX 8-18X1/2 STL	B						
	010	01	51805801	1		4	PC	BUMPER, RUBBER .300H SLF-STKG	P						
								0010 TOTAL LINES							

DWN	D. Wells	10/1/74	CONTROL DATA	TITLE	PREFIX	DOCUMENT NO.	REV.
CHKD	[illegible]	11/1/74		CABLE ASSY KEYBOARD EXTERNAL	A	61370500	F
ENG	[illegible]	10/14/74		FIRST USED ON	NHA	SHEET	
MFG	[illegible]	4/23/75		CC614 / CC6B1	61370100	1 of 4	
APPR	[illegible]	4-23-75	CODE IDENT 15920				

SHEET REVISION STATUS

4	3	2	1	REV	ECO	DESCRIPTION	DRFT	DATE	APP
—						RELEASED CLASS "C"		10-14-74	[illegible]
—	01	01	01	01	C039	REVISED CONN VIEW ADDED COND. IDENT NO. 18	[illegible]	11-8-74	[illegible]
02	02	02	02	02	C221	ADDED COND IDENT 19 thru 22 ADDED F/N 11 & 12 ADDED SHT 4	[illegible]	3-27-75	[illegible]
A	A	A	A	A	10653-1	RELEASED CLASS A	—	4/24/75	M.C.T.
A	B	A	B	B	CD 10908	REVISED PER ECO	8/6/75 JM	[illegible]	[illegible]
A	B	C	C	C	CD10952	ADDED DIM 5.00±.25	[illegible]	9/3/75	[illegible]
C	C	C	C	C	9401-15	ADD INT DIV LABEL	—	10/14/75	M.C.T.
C	C	C	C	C	9401-16	ADD INT DIV LABEL AA5722	—	10/23/75	M.C.T.
D	D	D	D	D	CD 11438	REVISED PER ECO	[illegible]	4-2-76	[illegible]
D	D	E	E	E	CD11547	Revised per ECO	rt	6/14/76	[illegible]
D	D	F	F	F	CD 11616	REVISED PER ECO	J.M	8-19-76	[illegible]

INTER-DIVISIONAL DOCUMENT
This document is subject to change without prior notice. Users will receive copy only of the revised document.

NOTES:

1. Bulk identify with CDC Part Number.
2. Put extra wires in F/N 12 and mount under cable tie as shown.
3. Tie wraps and screws included with connector hood.

APL 61370500
DETACHED LISTS

AA3180 REV. 8/71 PRINTED IN U.S.A.

CONTROL DATA	CODE IDENT	SHEET		DOCUMENT NO.	REV.
	15920	2	A	61370500	F

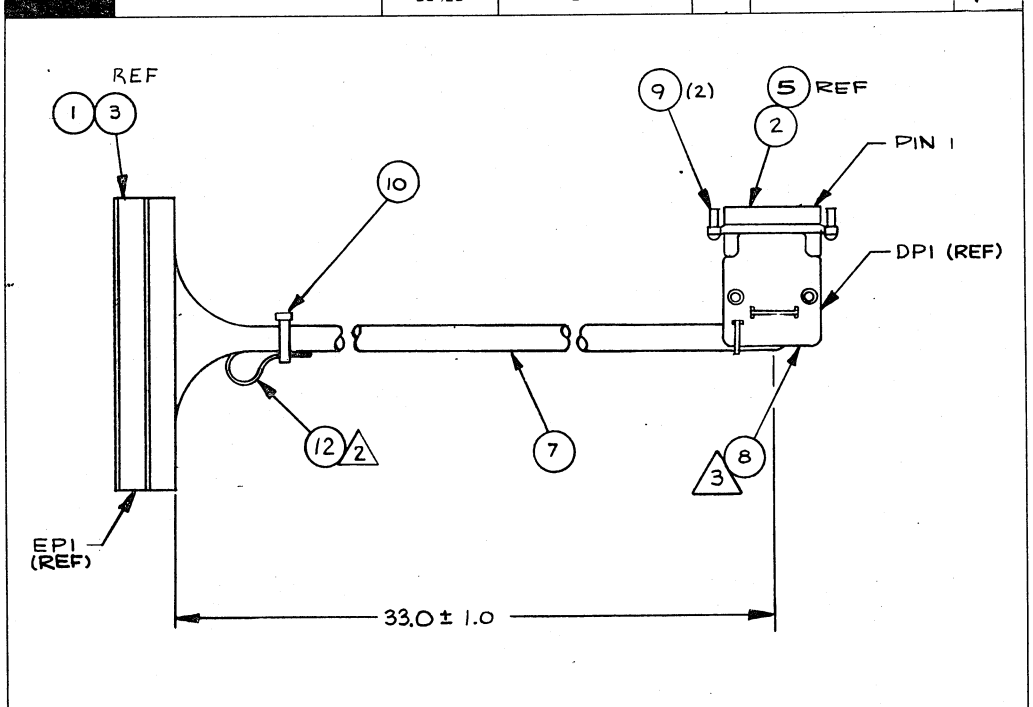

AA3185 PRINTED IN U.S.A.

CONTROL DATA		CODE IDENT 15920	SHEET 3	WL	DOCUMENT NO. 61370500	REV. D

CONDUCTOR IDENT.	FIND NO.	GAUGE (REF.)	COLOR (REF.)	LENGTH (APPROX)	ORIGIN		ACCESS FIND NO.	DESTINATION		ACCESS FIND NO.	REMARKS
1	7	26	90	36.0	DP1	1	5	EP1	1	3	Control Key
2			91			2			2		Kybd Data 2^7
3			92			3			3		Kybd Data 2^6
4			93			4			4		Kybd Data 2^5
5			94			5			5		Kybd Data 2^4
6			95			6			6		Kybd Data 2^3
7			96			7			7		Kybd Data 2^2
8			97			8			8		Kybd Data 2^1
9			98			9			9		Kybd Data 2^0
10			900			10			10		Kybd Rdy
11			901			11			11		Local To Print
12			902			12			12		Line To Print
13		26	903			14	5		14		Lower Case Enable
14		24	2			23	5		20		+5V
15		24	0			24	5		21		Gnd
16		24	9			25	5		22	3	-12V
17	7	24		36.0	DP1	20	5	EP1	18	3,11	Safety Gnd Bare Drain Wire
18	7	26	904	36.0	DP1	13	5	EP1	13	3	BREAK
19	7	26	912	36.0	DP1	15	5	EP1	15	3	GND
20	7	26	911	36.0	DP1	16	5	EP1	16	3	GND

AA3183 REV. 8-70 PRINTED IN U.S.A.

CONTROL DATA		CODE IDENT 15920	SHEET 4	WL	DOCUMENT NO. 61370500	REV D

CONDUCTOR IDENT.	FIND NO.	GAUGE (REF.)	COLOR (REF.)	LENGTH (APPROX)	ORIGIN		ACCESS FIND NO.	DESTINATION		ACCESS FIND NO.	REMARKS
21	7	26	950	36.0	DP1	17	5	EP1	17	3	GND
22	7	26	960	36.0	DP1	18	5	EP1	19	3	GND

AA3183 REV. 8/71 PRINTED IN U.S.A.

BUILD ARC 104

ASSEMBLY PARTS LIST

PRINT DATE	PAGE	FILE CHANGE NO.
08-10-76	1	00011616

DIV.	ASSEMBLY NUMBER	CD	REV.	DWG.	DESCRIPTION	MC	STATUS	STATUS DATE	ENG. RESP.	FILE DATE
0860	61370500	3	F	A	CABLE ASSY(KEYBOARD-EXTERNAL)	A	REL	04-24-75	LIAT	08-09-76

T	FIND NO	LI	PART NUMBER	CD	M	QUANTITY	U/M	PART DESCRIPTION	MC	YLD	ECO. NO. IN	ECO. NO. OUT	S/N	WK IN	WK OUT
	001	01	51652907	0		1	PC	CONN, PC EDGE 22 POS 3.588W	P						
	002	01	53397814	4		1	PC	CONN, MALE 25POSN PLUG ALONE	P						
	003	01	94219902	7		22	PC	CONTACT,FLAG 26-22AWG STRIP	P						
	004	01	53397818	5		18	PC	CONTACT, STRIP PINS 26-30GA	P			11438			7624
	005	01	53397817	7		4	PC	CONTACT, STRIP PINS 20-24GA	P			11438			7624
	005	02	53397817	7		22	PC	CONTACT, STRIP PINS 20-24GA	P		11438			7624	
	006	01	94277409	2		3	PC	STRAP CABLE TIE TYPE 6	P			11547			7621
	007	01	51908500	5		3	FT	CBL, SHLD FIG 1 25 CNDCT 300V	W						
	008	01	51908402	4		1	PC	CONN HOOD, .430/.390 CBL DIA	P						
	009	01	94288021	2		2	PC	LKG DEVICE, CONNECTOR TYP 3M	P						
	010	01	94277400	1		2	PC	STRAP CABLE TIE TYPE 1	P			11547A			7621
	010	02	94277400	1		5	PC	STRAP CABLE TIE TYPE 1	P		11547A	11616		7621	7633
	010	03	94277400	1		1	PC	STRAP CABLE TIE TYPE 1	P		11616			7633	
	011	01	24528610	9		300	FT	TUBING INS SZ 13 BLACK	B						
	012	01	51758103	9		250	FT	INS SLV+CLR,PVC HEAT SHRINK	B						
								0015 TOTAL LINES							

SHEET REVISION STATUS	REVISION RECORD					
	REV	ECO	DESCRIPTION	DRFT	DATE	CHKD	APP
	A	1065260	RELEASED CLASS A		7-30-76		TMT

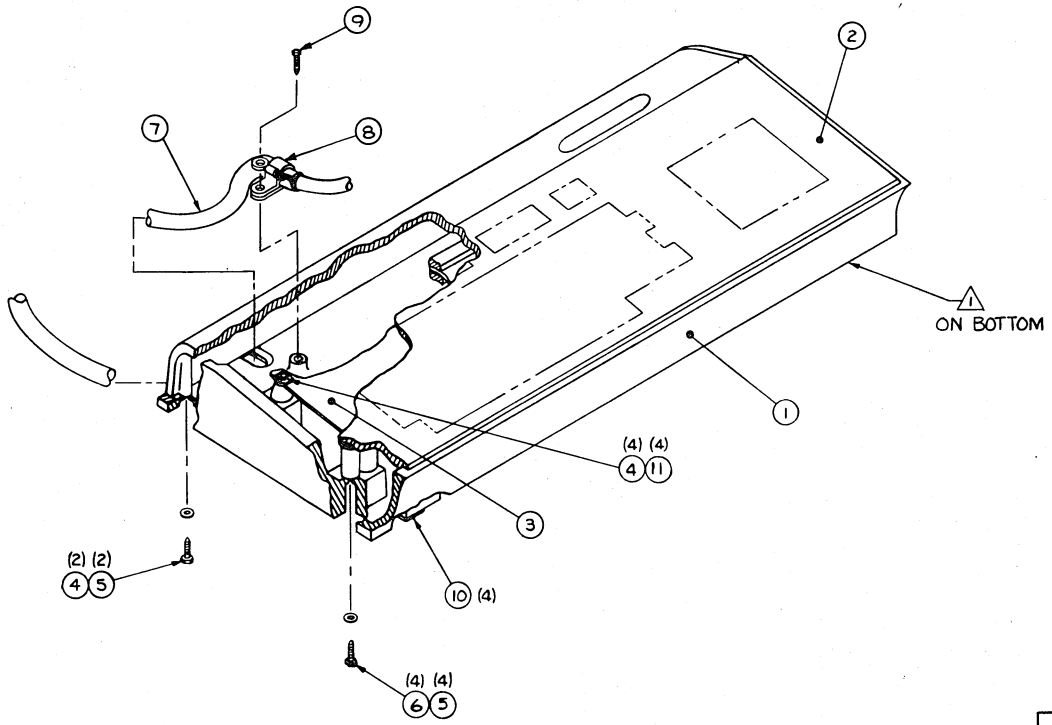

NOTES:
⚠1 MARK "ASSY 61407539" PER CDC SPEC 10121508.

APL 61407539 — DETACHED LISTS

UNLESS OTHERWISE SPECIFIED DIMENSIONS ARE IN INCHES
TOLERANCES
3 PLACE ± | 2 PLACE ± | ANGLES ±
DO NOT SCALE DRAWING
MATERIAL
FINISH

CONTROL DATA

FIRST USE ON	CC5B2B	
DRAWN BY	D. WELLS	7-14-76
CHECKED BY		
ENGINEER		
SPEC		
APPROVED		7-23-76
		7-23-76

TITLE: KEYBOARD ASSEMBLY 80 KEY (SHIELDED)

CODE IDENT: 15920 | D | DRAWING NO: 61407539

SCALE | NHA 1562192.1 | SHEET / OF /

BUILD ARC 440

ASSEMBLY PARTS LIST

PRINT DATE	PAGE	FILE CHANGE NO.
08-04-76	1	10653-60

DIV.	ASSEMBLY NUMBER	CD	REV.	DWG.	DESCRIPTION	MC	STATUS	STATUS DATE	ENG. RESP.	FILE DATE
0860	61A07539	8	A	D	KEYBOARD ASSY 80KEY (SHIELD)	N	REL	07-30-76	CC5828	08-04-76

T	FIND NO	LI	PART NUMBER	CD	M	QUANTITY	U/M	PART DESCRIPTION	MC	YLD	ECO. NO. IN	ECO. NO. OUT	S/N	WK IN	WK OUT
	001	01	71491940	4		1	PC	BASE KYBD SHIELDED	P						
	002	01	71492009	7		1	PC	COVER KEYBOARD MET(SHIELDED)	P						
	003	01	51915401	7		1	PC	KEYBOARD 80 KEY	P						
	004	01	00860303	7		6	PC	HSCR SELF-LKG HEX HD 6-32X3/8	B						
	005	01	10125605	5		6	PC	WSHR NO.6 TYP A PLAIN STL CP	B						
	006	01	00860304	5		4	PC	HSCR SELF-LKG HEX HD 6-32X1/2	B						
	007	01	61407519	0		1	PC	CABLE ASSY KEYBOARD EETERNAL	A						
	008	01	51917670	8		1	PC	CLAMP TUBE	P						
	009	01	18607908	3		1	PC	SCR, TPG IND/HEX 6-18H1/2 STL	B						
	010	01	51805801	1		4	PC	BUMPER, RUBBER .300H GLP-STK6	P						
	011	01	09040202	5		4	PC	WASHER LOCK DISHED TOOTH NO.6	B						
								0011 TOTAL LINES							

DWN	D. WELLS	7-14-76	CONTROL DATA	TITLE: CABLE ASSY KEYBOARD EXTERNAL	PREFIX: A	DOCUMENT NO.: 61407519	REV.: A
CHKD							
ENG							
MFG				FIRST USED ON: CC6B1D	NHA: 61407520	SHEET: 1 of 5	
APPR			CODE IDENT: 15920				

SHEET REVISION STATUS						REVISION RECORD					
5	4	3	2	1	REV	ECO	DESCRIPTION	DRFT	DATE	APP
A	A	A	A	A	A	10653-60	RELEASED CLASS A		7/30/76	MT

NOTES:
1. PUT EXTRA WIRES IN F/N 10 AND MOUNT UNDER STRAP AS SHOWN.
2. DIVIDE INTO TWO (2) HALVES. SECURE EACH HALF TO ONE (1) GROUND CLIP AND SOLDER.
3. CABLE TIE FURNISHED WITH CONNECTOR.

APL 61407519

DETACHED LISTS

AA3180 REV. 8/71

PRINTED IN U.S.A.

CONTROL DATA	CODE IDENT: 15920	SHEET: 2	A	DOCUMENT NO.: 61407519	REV.: A

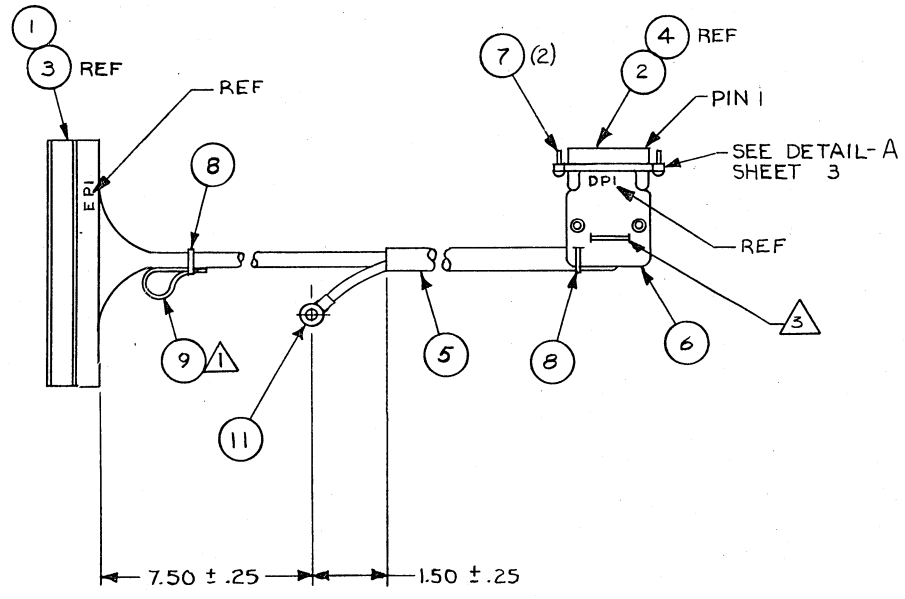

A3185

PRINTED IN U.S.A.

CONTROL DATA		CODE IDENT 15920	SHEET 3	A	DOCUMENT NO. 61407-19	REV A

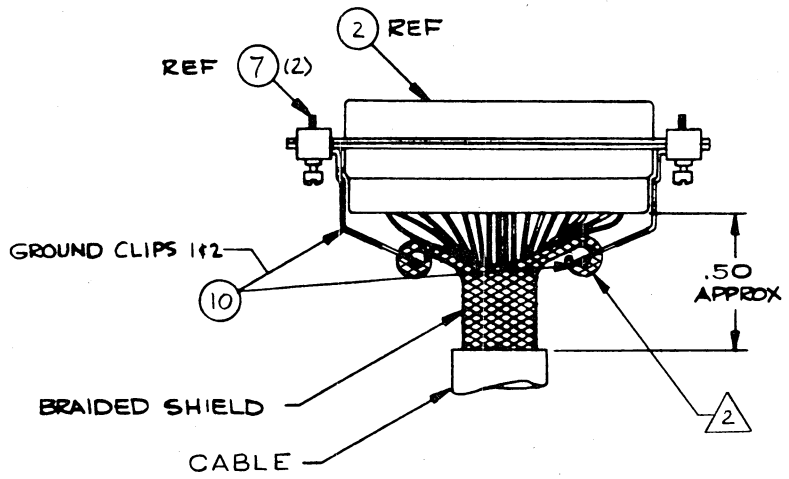

DETAIL-A
SHIELD WIRING VIEW OF CONNECTOR DP1 FIND NO 7.—HOOD NOT SHOWN

AA3185

PRINTED IN U.S.A.

CONTROL DATA					CODE IDENT 15920		SHEET 4		WL	DOCUMENT NO. 61407519	REV. A
CONDUCTOR IDENT.	FIND NO.	GAUGE (REF.)	COLOR (REF.)	LENGTH (APPROX)	ORIGIN		ACCESS FIND NO.	DESTINATION		ACCESS FIND NO.	REMARKS
1	6	26	0	36.0	DP1	1	5	EP1	1	3	Control Key
2	6	26	91	36.0	DP1	2	5	EP1	2	3	Kybd Data 2^7
3	6	26	92	36.0	DP1	3	5	EP1	3	3	Kybd Data 2^6
4	6	26	93	36.0	DP1	4	5	EP1	4	3	Kybd Data 2^5
5	6	26	94	36.0	DP1	5	5	EP1	5	3	Kybd Data 2^4
6	6	26	95	36.0	DP1	6	5	EP1	6	3	Kybd Data 2^3
7	6	26	96	36.0	DP1	7	5	EP1	7	3	Kybd Data 2^2
8	6	26	97	36.0	DP1	8	5	EP1	8	3	Kybd Data 2^1
9	6	26	98	36.0	DP1	9	5	EP1	9	3	Kybd Data 2^0
10	6	26	910	36.0	DP1	10	5	EP1	10	3	Kybd Rdy
11	6	26	920	36.0	DP1	11	5	EP1	11	3	Local to Print
12	6	26	930	36.0	DP1	12	5	EP1	12	3	Line to Print
13	6	26	940	36.0	DP1	14	5	EP1	14	3	Lower Case Enable
14	6	24	2	36.0	DP1	23	5	EP1	20	3	+5V
15	6	24	3	36.0	DP1	24	5	EP1	21	3	Gnd
16	6	24	4	36.0	DP1	25	5	EP1	22	3	-12V
17	6	24	1	36.0	DP1	20	5	EP1	18	3	Safety Gnd
18	6	26	950	36.0	DP1	13	5	EP1	13	3	Break
19	6	26	960	36.0	DP1	15	5	EP1	15	3	Gnd
20	6	26	970	36.0	DP1	16	5	EP1	16	3	Gnd

AA3183 REV. 8/71 PRINTED IN U.S.A.

CONTROL DATA					CODE IDENT 15920		SHEET 5		WL	DOCUMENT NO. 61407519	REV. A
CONDUCTOR IDENT.	FIND NO.	GAUGE (REF.)	COLOR (REF.)	LENGTH (APPROX)	ORIGIN		ACCESS FIND NO.	DESTINATION		ACCESS FIND NO.	REMARKS
21	6	26	5	36.0	DP1	17	5	EP1	17	3	Gnd
22	6	26	6	36.0	DP1	18	5	EP1	19	3	Gnd
					DP1		11	LUG		12	BRAIDED CABLE SHIELD

AA3183 REV. 8/71 PRINTED IN U.S.A.

BUILD ARC 104

ASSEMBLY PARTS LIST

PRINT DATE	PAGE	FILE CHANGE NO.
08-05-76	1	10653-60

DIV.	ASSEMBLY NUMBER	CD	REV.	DWG.	DESCRIPTION	MC	STATUS	STATUS DATE	ENG. RESP.	FILE DATE
0860	61407519	0	A	A	CABLE ASSY KEYBOARD EXTERNAL	A	REL	07-30-76	CC6B1D	08-05-76

T	FIND NO	LI	PART NUMBER	CD	M	QUANTITY	U/M	PART DESCRIPTION	MC	YLD	ECO. NO. IN	ECO. NO. OUT	S/N	WK IN	WK OUT
	001	01	51652907	0		1	PC	CONN, PC EDGE 22 POS 3.588W	P						
	002	01	53397814	4		1	PC	CONN, MALE 25POSN PLUG ALONE	P						
	003	01	94219902	7		22	PC	CONTACT,FLAG 26-22AWG STRIP	P						
	004	01	53397817	7		22	PC	CONTACT, STRIP PINS 20-24GA	P						
	005	01	51908501	3		3	FT	CBL, SHLD FIG 2 25 CNDCT 300V	W						
	006	01	51908402	4		1	PC	CONN HOOD, .430/.390 CBL DIA	P						
	007	01	94288021	2		2	PC	LKG DEVICE, CONNECTOR TYP 3M	P						
	008	01	94277400	1		2	PC	STRAP CABLE TIE TYPE 1	P						
	009	01	51758103	9		250	FT	INS SLV+CLR,PVC HEAT SHRINK	B						
	010	01	71491967	7		2	PC	CLIP, GROUND (COPPER/TIN PL)	P						
	011	01	51797259	2		1	PC	LUG, CRMP R TERM 12-10GA BSS	B						
								0011 TOTAL LINES							

SHEET REVISION STATUS	REVISION RECORD					
	REV	ECO	DESCRIPTION	DRFT	DATE	CHKD	APP
	—	[illegible]	RELEASED CLASS [illegible]	[illegible]	[illegible]		
	A	[illegible]	RELEASED CLASS [illegible]	[illegible]	[illegible]		

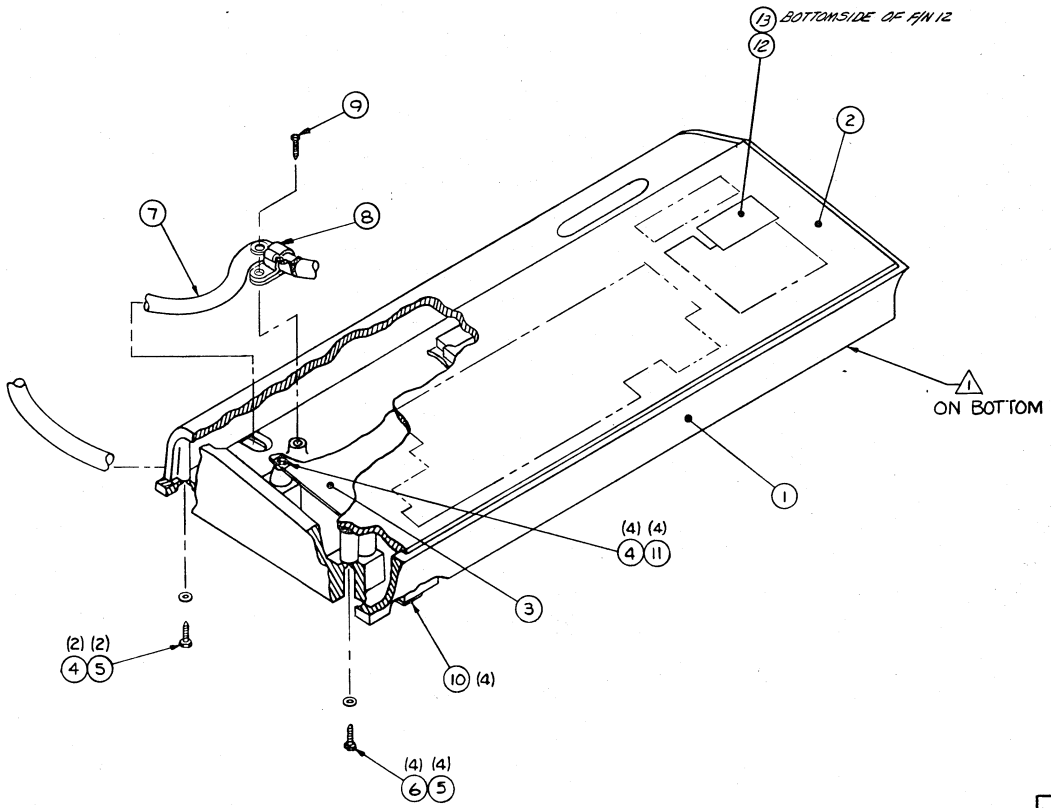

NOTES:
⚠1 MARK "ASSY 15630975" PER CDC SPEC 10121508.

APL 15630975 DETACHED LISTS	UNLESS OTHERWISE SPECIFIED DIMENSIONS ARE IN INCHES. TOLERANCES: 3 PLACE ±, 2 PLACE ±, ANGLES ±. DO NOT SCALE DRAWING. MATERIAL. FINISH.	[redacted] / CA 150 B	TITLE: KEYBOARD ASSEMBLY 82 KEY
		DRAWN BY: L. VOLKER 10-6-77	
		CHECKED BY: [illegible] [illegible]	
		ENGINEER: [illegible] [illegible]	CODE IDENT 15920 / D / DRAWING NO 15630975
		MFG: [illegible] 10-31-77	
		APPROVED: [illegible] 7-20-78	SCALE / EC 15630974 / SHEET / OF

BUILD ARC 230

ASSEMBLY PARTS LIST

PRINT DATE	PAGE	FILE CHANGE NO.
04-11-78	1	12490-15

DIV.	ASSEMBLY NUMBER	CD	REV.	DWG.	DESCRIPTION	MC	STATUS	STATUS DATE	ENG. RESP.	FILE DATE
0860	15630975	9	A	D	KYBD ASSY 82KEY (TLA)	G	REL	04-07-78	CA150R	04-11-78

T	FIND NO	LI	PART NUMBER	CD	M	QUANTITY	U/M	PART DESCRIPTION	MC	YLD	ECO. NO. IN	ECO. NO. OUT	S/N	WK IN	WK OUT
	001	01	71453200	9		1	PC	BASE, KEYBOARD (GOLD FINISH)	P						
	002	01	71492406	5		1	PC	COVER KYBD 82 KEY	P						
	003	01	51917735	6		1	PC	KEYBOARD SELECTRIC	P						
	004	01	00860303	7		6	PC	MSCR SLF-LKG HEX 6-32X3/8	A						
	005	01	10125605	5		6	PC	WSHR NO.6 TYP A PLAIN STL CP	A						
	006	01	00860304	5		4	PC	MSCR SLF-LKG HEX 6-32X1/2	A						
	007	01	61407894	7		1	PC	CABLE ASSY KYBD EXT	A						
	008	01	51917070	8		1	PC	CLAMP, TUBE SIZE 6 (ALUM)	P						
	009	01	18607908	3		1	PC	SCR, TPG IND/HEX 8-18X1/2 STL	B						
	010	01	51805801	1		4	PC	BUMPER, RUBBER .300H SLF-STKG	P						
	011	01	09040202	5		4	PC	WASHER LOCK DISHED TOOTH NO.6	A						
	012	01	71492181	4		1	PC	PLUG, SWITCH (PLASTIC/BLK)	P						
	013	01	71492421	4		1	PC	LABEL COVER SWITCH	P						
								0013 TOTAL LINES							

SHEET REVISION STATUS	REVISION RECORD						
	REV	ECO	DESCRIPTION	DRFT	DATE	CHKD	APP
	/	50001-23	RELEASED CLASS B	-	1/20/78	-	[illegible]
	A	12490-15	RELEASED CLASS "A"		[illegible]		[illegible]

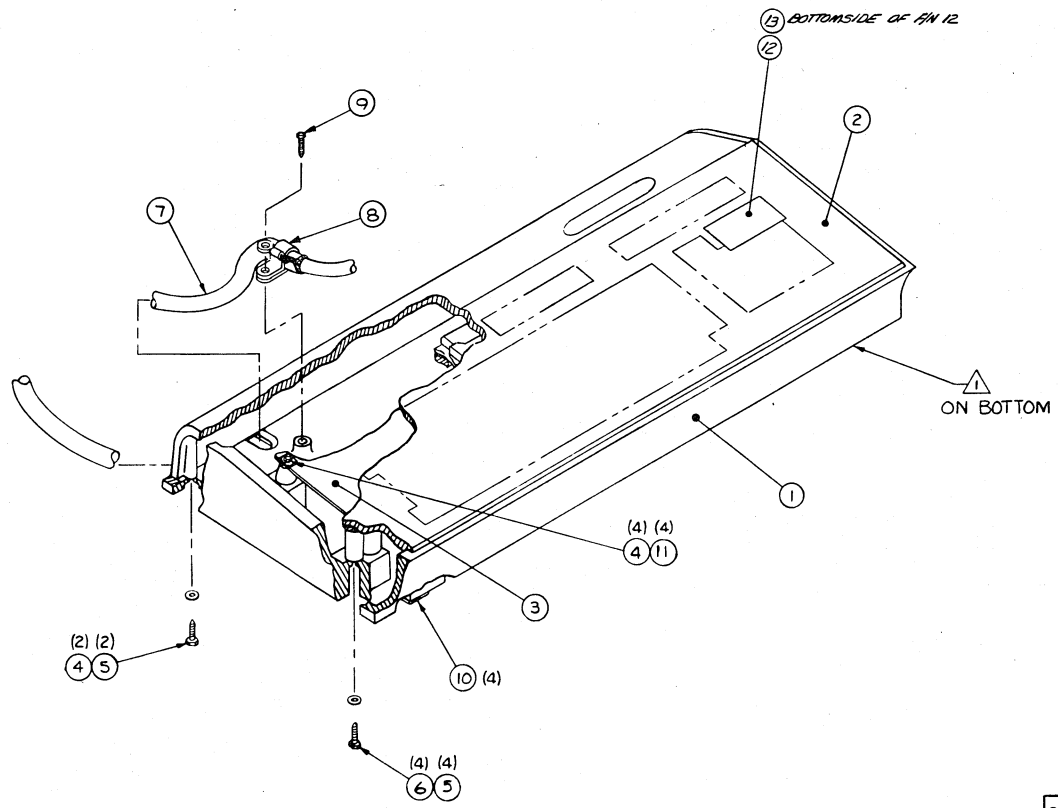

NOTES:
1. MARK "ASSY 15631260" PER CDC SPEC 10121508.

APL 15631260	DETACHED LISTS	UNLESS OTHERWISE SPECIFIED DIMENSIONS ARE IN INCHES TOLERANCES 3 PLACE ± 2 PLACE ± ANGLES ± DO NOT SCALE DRAWING MATERIAL FINISH	FIRST USED ON CA150D; DRAWN BY E GROVO 1/6/78; CHECKED BY [illegible] 1/6/78; ENGINEER [illegible] 1/19/78; MFG [illegible] 3/17/78; APPROVED [illegible] 5/20/78

TITLE: KEYBOARD ASSEMBLY 82 KEY (SHIELDED)

CODE IDENT 15920 | D | DRAWING NO 15631260

SCALE | EC 15631259 | SHEET 1 OF 1

BUILD ARC 230

ASSEMBLY PARTS LIST

PRINT DATE	PAGE	FILE CHANGE NO.
07-26-78	1	12490-15

DIV.	ASSEMBLY NUMBER	CD	REV.	DWG.	DESCRIPTION	ASC	STATUS	STATUS DATE	ENG. RESP.	FILE DATE
0860	15431260	5	A	D	KYBD, 82 KEY W/NP FTZ (TA)	G	REL	04-07-78	CA150D	07-26-78

TYP	FIND NO	LI	PART NUMBER	CD	MC	QUANTITY	U/M	PART DESCRIPTION	MC	YLD	ECO. NO. IN	ECO. NO. OUT	S/N	WK IN	WK OUT
	001	01	71491940	4		1	PC	BASE, KYBD ±SHIELDED±	P						
	002	01	71492406	5		1	PC	COVER, 82KEY KYBD (PAINTED)	P						
	003	01	51917735	6		1	PC	KEYBOARD SELECTRIC	P						
	004	01	00860303	7		6	PC	MSCR SLF-LKG HEX 6-32X3/8	B						
	005	01	12125605	5		6	PC	WSHR NO.6 TYP A PLAIN STL CP	B						
	006	01	00860304	5		4	PC	MSCR SLF-LKG HEX 6-32X1/2	B						
	007	01	61407894	7		1	PC	CABLE ASSY KYBD EXT	A						
	008	01	51917070	8		1	PC	CLAMP, TUBE SIZE 6 (ALUM)	P						
	009	01	12607908	3		1	PC	SCR, TPG IND/HEX 8-18X1/2 STL	B						
	010	01	51805801	1		4	PC	BUMPER, RUBBER .300H SLF-STKG	P						
	011	01	09040202	5		4	PC	WASHER LOCK DISHED TOOTH NO.6	B						
	012	01	71492181	4		1	PC	PLUG, SWITCH (PLASTIC/BLK)	P						
	013	01	71492421	4		1	PC	LABEL, SWITCH COVER (VINYL)	P						
								0013 TOTAL LINES							

DWN	R. Trautman	10-21-77	CONTROL DATA	TITLE: CABLE ASSY KEYBOARD EXTERNAL	PREFIX: A	DOCUMENT NO.: 61407894	REV.: D
CHKD	E. [illegible]	[illegible]					
ENG	[illegible]	[illegible]					
MFG	[illegible]	10/31/77		FIRST USED ON: CA150 B	NHA: 15630975	SHEET: 1 of 5	
APPR	E. M. Noe	3-20-78	CODE IDENT: 15920				

SHEET REVISION STATUS

5	4	3	2	1
—	—	—	—	—
A	A	A	A	A
A	A	A	B	B
A	A	A	B	C
A	A	A	D	D

REVISION RECORD

REV	ECO	DESCRIPTION	DRFT	DATE	APP
—	50000-90	RELEASED CLASS "B"	/	11-1-77	[illegible]
A	12490-15	RELEASED CLASS "A"	/	4-7-78	[illegible]
B	13049	REVISED PER ECO	WJG 7-24-78	7-25-78	[illegible]
C	13202	P/L CHG ONLY	EE	11-9-78	[illegible]
D	13416	ADD F/N 13	WJG 3-19-79	3/19/79	[illegible]

NOTES:
1. APPLY LABEL TO CABLE PER DRAWING 82191061, METHOD 5. MARK AS SHOWN.
2. FOLD BACK UNUSED WIRES AND ADD SHRINK SLEEVING TO END OF WIRES.
3. MARK WITH WHITE DOT TO IDENTIFY PIN 2 LOCATION.

APL 61407894

DETACHED LISTS

AA3180 REV. 8/71 PRINTED IN U.S.A.

CONTROL DATA	CODE IDENT: 15920	SHEET: 2	A	DOCUMENT NO: 61407894	REV: D

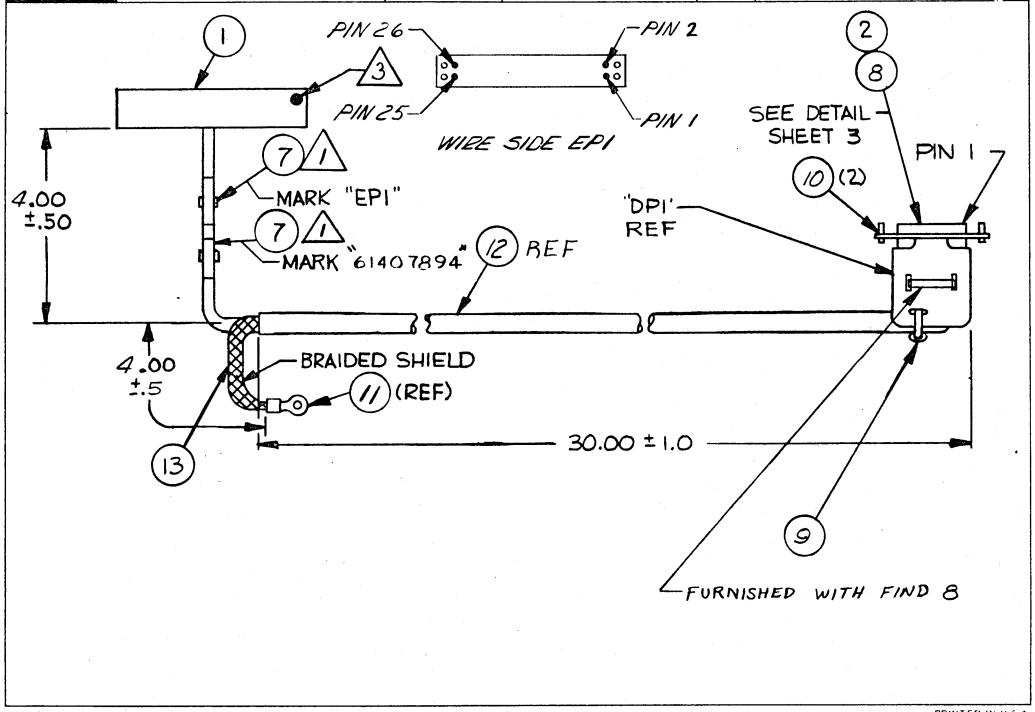

AA3185 PRINTED IN U.S.A.

CONTROL DATA		CODE IDENT 15920	SHEET 3	A	DOCUMENT NO 61407894	REV A

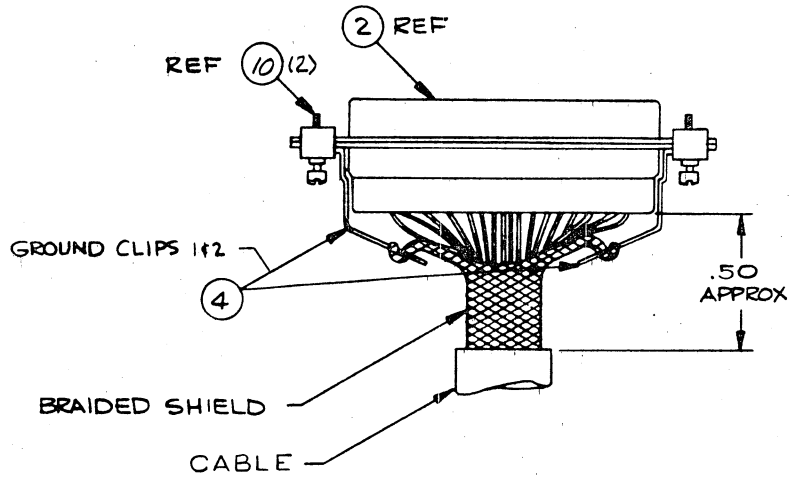

SHIELD WIRING VIEW
OF CONNECTOR "DP1"
FIND NO 8 - HOOD
NOT SHOWN

AA3185

PRINTED IN U.S.A.

CONTROL DATA					CODE IDENT 15920		SHEET 4		WL	DOCUMENT NO. 61407894	REV. A

CONDUCTOR IDENT.	FIND NO.	GAUGE (REF.)	COLOR (REF.)	LENGTH (APPROX)	ORIGIN		ACCESS FIND NO.	DESTINATION		ACCESS FIND NO.	REMARKS
1	12	26	970	36.0	DP1	1	5	EP1	21	3	C.O. LED
2	12	26	5	36.0	DP1	2	5	EP1	19	3	SW8, PAGE/SCROLL
3	12	26	6	36.0	DP1	3	5	EP1	5	3	KYBD DATA 2^6
4	12	26	7	36.0	DP1	4	5	EP1	6	3	KYBD DATA 2^5
5	12	26	8	36.0	DP1	5	5	EP1	7	3	KYBD DATA 2^4
6	12	26	9	36.0	DP1	6	5	EP1	8	3	KYBD DATA 2^3
7	12	26	90	36.0	DP1	7	5	EP1	9	3	KYBD DATA 2^2
8	12	26	91	36.0	DP1	8	5	EP1	10	3	KYBD DATA 2^1
9	12	26	92	36.0	DP1	9	5	EP1	11	3	KYBD DATA 2^0
10	12	26	93	36.0	DP1	10	5	EP1	3	3	DATA READY
11	12	26	94	36.0	DP1	11	5	EP1	22	3	KEY 4 ON LINE
12	12	26	95	36.0	DP1	12	5	EP1	14	3	SW3, FULL/HALF
13	12	26	98	36.0	DP1	13	5	EP1	2	3	BREAK
14	12	26	910	36.0	DP1	14	5	EP1	15	3	SW4, HIGH RATE
15	12	24	4	36.0	DP1	15	5	EP1	16	3	SW5, LOW RATE
16	12	26	920	36.0	DP1	16	5	EP1	17	3	SW6, ODD PARITY
17	12	26	930	36.0	DP1	17	5	EP1	18	3	SW7, EVEN PARITY
18	12	26	940	36.0	DP1	18	5	OPEN			NOT USED (2) SW1
19	12	26	96	36.0	DP1	19	5	OPEN			NOT USED (2) SW2
20	12	26	950	36.0	DP1	20	5	EP1	20	3	FRAME GROUND

AA3183 REV. 8/71

PRINTED IN U.S.A.

CONTROL DATA		CODE IDENT 15920	SHEET 5	WL	DOCUMENT NO. 61407894	REV. A

CONDUCTOR IDENT.	FIND NO.	GAUGE (REF.)	COLOR (REF.)	LENGTH (APPROX)	ORIGIN		ACCESS FIND NO.	DESTINATION		ACCESS FIND NO.	REMARKS
21	12	26	97	36.0	DP1	21	5	OPEN			NOT USED (2) KEY 5 BLOCK
22	12	26	960	36.0	DP1	22	5	OPEN			NOT USED (2) DATA 2^7
23	12	24	2	36.0	DP1	23	5	EP1	24	3	+5VDC
24	12	24	1	36.0	DP1	24	5	EP1	25	3	GROUND SIGNAL
25	12	24	3	36.0	DP1	25	5	EP1	26	3	-12 VDC
26	12				DP1		4	LUG		11	BRAIDED SHIELD
	12				DP1		4				

AA3183 REV. 8/71

PRINTED IN U.S.A.

BUILD ARC 104

ASSEMBLY PARTS LIST

PRINT DATE	PAGE	FILE CHANGE NO.
03-12-79	1	00013416

DIV.	ASSEMBLY NUMBER	CD	REV.	DWG.	DESCRIPTION	MC	STATUS	STATUS DATE	ENG. RESP.	FILE DATE
0860	61407894	7	D	A	CABLE ASSY KYBD EXT	A	REL	04-07-78	CA1508	03-12-79

T	FIND NO	LI	PART NUMBER	CD	M	QUANTITY	U/M	PART DESCRIPTION	MC	YLD	ECO. NO. IN	ECO. NO. OUT	S/N	WK IN	WK OUT
	001	01	94361113	7		1	PC	CONN HSG, 30 CAV 2RX15SKT BLK	P						
	002	01	53397814	4		1	PC	CONN, MALE 25POSN PLUG ALONE	P						
	003	01	94245601	3		21	PC	CONT, SKT 22-26GA 2 W/F STRIP	P						
	004	01	71491967	7		2	PC	CLIP, GROUND (COPPER/TIN PL)	P						
	005	01	53397817	7		25	PC	CONTACT, STRIP PINS 20-24GA	P						
	006	01	24534707	5		333	FT	SLVG, 3/16 HT/SHRINK BLK UL	B						
	007	01	94277407	6		2	PC	STRAP, CBL TIE TYP 4 TO 5/8	B						
	008	01	51908402	4		1	PC	CONN HOOD, .430/.390 CBL DIA	P						
	009	01	94277400	1		1	PC	STRAP, CBL TIE TYP 1 TO 5/8	B						
	010	01	94288021	2		2	PC	LKG DEVICE, CONNECTOR TYP 3M	P						
	011	01	51797255	0		1	PC	LUG, CRMP R TERM 12-10GA 6SS	B			13202			7845
	011	02	51797259	2		1	PC	LUG, CRMP R TERM 12-10GA 8SS	B		13202			7845	
	012	01	51908501	3		3	FT	CBL, SHLD FIG 2 25 CNDCT 300V	W						
	013	01	24528617	4		200	FT	TBG, INSUL NO.6 BLK UL PVC	B		13416			7912	
								0014 TOTAL LINES							

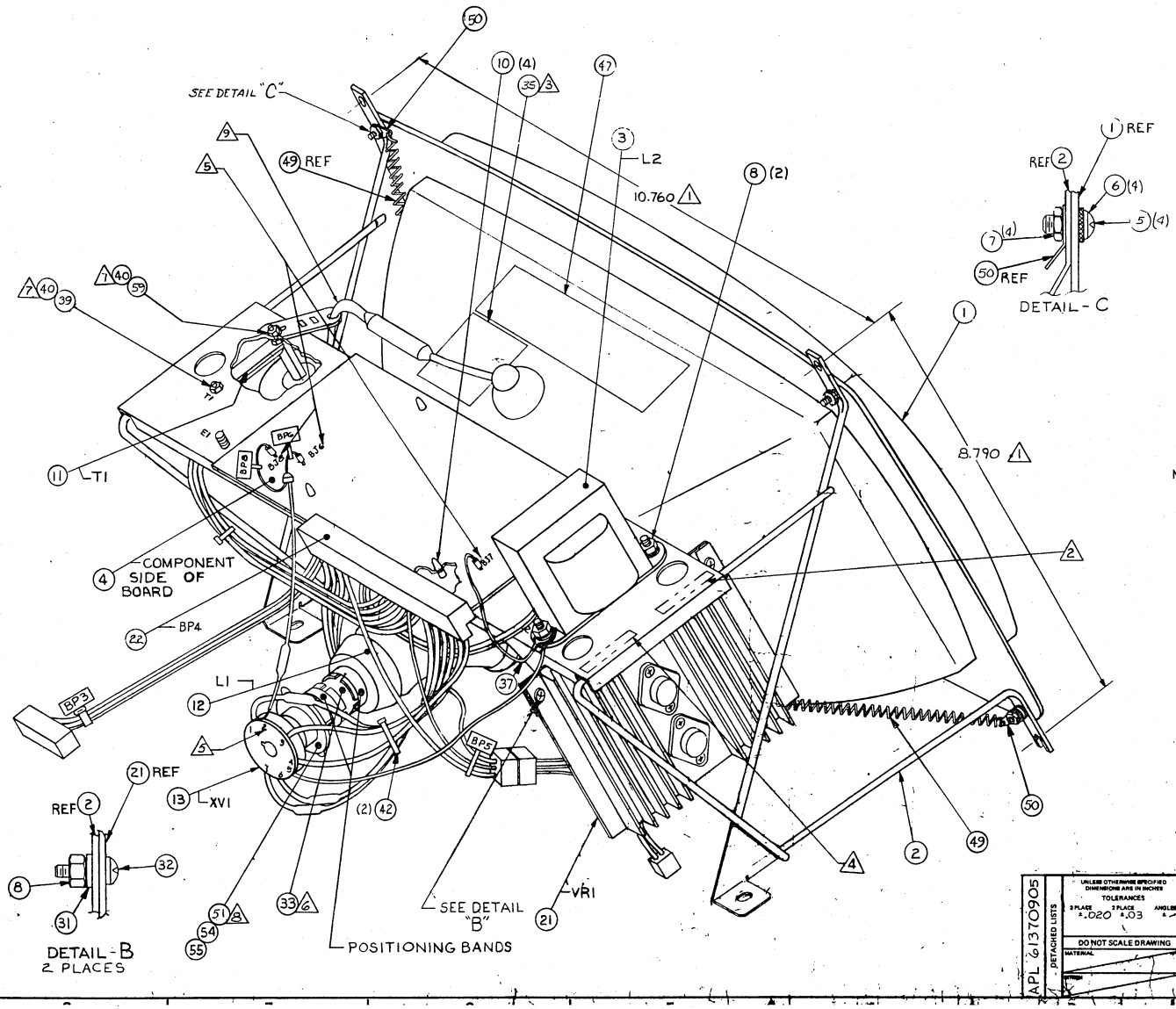

REV	ECO	DESCRIPTION	DRFT	DATE	CHKD	APP
		RELEASED CLASS "C"				
01	C847	ADDED F/NS 52 THRU 58	R	10/6/76	R	
02	C861	F/N 21 WAS 61407441	R	10/15/76	R	
03	C864	DELETED F/N'S 52 & 53	R	10/19/76	R	
A	[illegible]	[illegible]				
B	CD 11954	MOVE SPRING	MP	11-18-77	MP	
C	[illegible]	[illegible]				
D	CD12197	REVISED PER ECO	R	5-8-77	R	
E	CD12502	REVISED PER ECO	MP	11-7-77	MP	
F	12855	REVISED PER ECO	E.E.	4-20-78	E.E.	
G	13037	REVISED PER ECO	WJG	8-18-78	E.E.	

8 F/N'S 51, 54 & 55 ADJUSTMENT PROCEDURE:
1. INSTALL F/N 51 ON CRT NECK - BUTT UP AGAINST YOKE.
2. TIGHTEN CLAMP TO PREVENT ROTATION OF RING MAGNET ASSY. TABS 180° APART.
3. DISPLAY LARGE CASE H'S ON CRT SCREEN AT PROPER INTENSITY.
4. ADJUST FOCUS POT ON 6 BND VIDEO BOARD ASSY 90460619.
5. IF TAILS ARE VISIBLE ON LEGS OF H'S IN RASTER CORNERS, BRING RING MAGNET TABS TOGETHER AND ROTATE RING MAGNETS AROUND CRT NECK TO MINIMIZE TAILING.
6. SPREAD TABS SLIGHTLY - IF FOCUS IMPROVES WITHOUT INCREASE IN TAILING, CONTINUE TO SPREAD FOR BEST CHARACTER DEFINITION. SHOULD TAILING INCREASE, CLOSE TABS TOGETHER. READJUST FOCUS POT ON 90460619 ASSEMBLY.
7. IF TAILS ARE STILL PRESENT, REPEAT STEPS 1 THRU 6 USING F/N 55. USE F/N 54 IF TAILS REVERSE DIRECTION 180°.

NOTES:
1. CRT TO BE FIXTURED ON FRAME.
2. MARK "ASSY 61370905" IN AREA SHOWN PER CDC SPEC 10121508.
3. DO NOT COVER ANY OF THE RED AREA ON THE CRT, F/N 1, WHEN INSTALLING LABEL, F/N 35.
4. MARK SERIAL NO. "S/N _____" IN AREA SHOWN PER CDC STD. 1.01.025 AND CDC SPEC 10121508.
5. SHOWN FOR REFERENCE ONLY AND MAY NOT APPEAR ON PART.
6. INSTALL LINEARITY SLEEVE WITH COPPER SIDE AGAINST THE CRT GLASS AND THE ETCHED EDGE TOWARD THE YOKE (F/N 12) TWO EDGES SHALL MEET ON A LINE PARALLEL WITH THE CRT AXIS AND ALIGNED WITH PIN 7 OF CRT. INITIALLY APPROXIMATELY ONE HALF OF SLEEVE LENGTH IS INSERTED INTO YOKE.
7. DO NOT REMOVE OR LOOSEN NUTS ON H.V. FLYBACK UNIT, F/N 11. USE NUT, F/N 40, IN MOUNTING F/N 11.
9. POSITION BOOT AND FORM LEAD SO LEAD HAS A MINIMUM CLEARANCE OF 1/2 INCH FROM CRT AND METAL PARTS, AND SECURE IN PLACE WITH INSULATOR.

APL 61370905

UNLESS OTHERWISE SPECIFIED DIMENSIONS ARE IN INCHES
TOLERANCES
3 PLACE ±.020 2 PLACE ±.03 ANGLES ±
DO NOT SCALE DRAWING
MATERIAL
FINISH

CONTROL DATA
FIRST USED ON: CC6BIC
DRAWN BY: [illegible] 7-22-76
CHECKED BY: [illegible]
ENGINEER: [illegible]
MFG: [illegible]
APPROVED: [illegible] 10-17-76

TITLE: VIDEO DISPLAY ASSEMBLY NON-COMPOSITE

CODE IDENT: 15920 D DRAWING NO: 61370905
NHA15620606 SHEET OF

BUILD ARC 440

ASSEMBLY PARTS LIST

PRINT DATE	PAGE	FILE CHANGE NO.
08-14-78	1	00013037

DIV.	ASSEMBLY NUMBER	CD	REV.	DWG.	DESCRIPTION	MC	STATUS	STATUS DATE	ENG. RESP.	FILE DATE
0860	61370905	4	G	C	VIDEO DISPLAY ASSY	N	REL	10-19-76	CC6B1C	08-14-78

T	FIND NO	LI	PART NUMBER	CD	AM	QUANTITY	U/M	PART DESCRIPTION	MC	YLD	ECO. NO. IN	ECO. NO. OUT	S/N	WK IN	WK OUT
	001	01	51907303	5		1	PC	CRT 12IN PHOS P4 GLOSS-MTN 60	P						
	002	01	71456300	4		1	PC	FRAME VIDEO DISPLAY	P						
	003	01	61407419	3		1	PC	CHOKE ASSY	A						
	004	01	90460619	1		1	PC	CD ASSY 68ND-A (W/COMP VIDEO)	S						
	005	01	10127122	9		4	PC	MSCR PAN PHL 8-32X 3/8	B						
	006	01	10126402	6		4	PC	WSHR NO.8 EXT TOOTH LK TYP A	B						
	007	01	10122902	9		4	PC	NUT TWIN SELF LOCKING 8-32	B						
	008	01	10122901	1		4	PC	NUT TWIN SELF LOCKING 6-32	B						
	010	02	51777314	9		4	PC	SPRT, CKT BD 3/16 NYL FIG 2	P		12197			7717	
	011	02	61407695	8		1	PC	HIGH VOLTAGE TRANSFORMER ASSY	A		12107	12855		7715	7835
	011	03	61408675	2		1	PC	HIGH VOLTAGE TRANSFORMER ASSY	A		12855			7835	
	012	01	61407418	5		1	PC	YOKE ASSY	A						
	013	02	61407540	6		1	PC	CRT CAP ASSY	A			12502			7746
	013	03	61407856	6		1	PC	CRT SOCKET ASSY	A		12502			7746	
	021	01	61407617	2		1	PC	REGULATOR ASSY +15V	A						
	022	01	61407420	1		1	PC	CABLE ASSY VIDEO DISPLAY	A						
	028	02	61378200	2		REF	PC	W/L VIDEO DISPLAY	D			12502			7746
	028	03	61407887	1		REF	PC	W/L VIDEO DISPLAY	D		12502			7746	
	029	01	94277409	2		2	PC	STRAP CABLE TIE TYPE 6	B			12855			7835
	030	01	16035100	3		REF	PC	RASTER SCAN CRT DISPLAY	D						
	031	01	10125605	5		2	PC	WSHR NO.6 TYP A PLAIN STL CP	B						
	032	01	10127113	8		2	PC	MSCR PAN PHL 6-32X 3/8	B						

BUILD ARC 440

ASSEMBLY PARTS LIST

PRINT DATE	PAGE	FILE CHANGE NO.
08-14-78	2	00013037

DIV.	ASSEMBLY NUMBER	CD	REV.	DWG.	DESCRIPTION	MC	STATUS	STATUS DATE	ENG. RESP.	FILE DATE
0860	61370905	4	G	C	VIDEO DISPLAY ASSY	N	REL	10-19-76	CC6B1C	08-14-78

T	FIND NO	LI	PART NUMBER	CD	AM	QUANTITY	U/M	PART DESCRIPTION	MC	YLD	ECO. NO. IN	ECO. NO. OUT	S/N	WK IN	WK OUT
	033	01	71468100	4		1	PC	SLEEVE LINEARITY CONTROL	B						
	035	01	51916874	4		1	PC	PLATE, DANGER VINYL WHT/RED	P						
	037	02	61391111	4		1	PC	GND WIRE ASSY 3.0 20GA SKT	A		11954			7707	
	038	01	71492887	3		1	PC	INSULATOR, MOD PAPER UL	P			12855			7835
	039	01	10126101	4		3	PC	INT TOOTH LK WSHR #4	B			12855			7835
	039	02	10126101	4		2	PC	INT TOOTH LK WSHR #4	B		12855	13037A		7835	7835
	039	03	10126101	4		1	PC	INT TOOTH LK WSHR #4	B		13037A			7835	
	040	01	10125103	1		1	PC	NUT, HEX MSCR 4-40 STL CP/ZP	B			12855			7835
	040	02	10125103	1		2	PC	NUT, HEX MSCR 4-40 STL CP/ZP	B		12855			7835	
	042	01	94277400	1		2	PC	STRAP CABLE TIE TYPE 1	B						
	047	01	71479201	7		1	PC	LABEL, MON ADJ W/INTENSITY	P						
	049	01	71491984	2		1	PC	SPRING-EXT CRT GROUND	P						
	050	02	51917102	0		2	PC	LUG, R SLD TERM NO 8 FIG 1	B		11954			7707	
	051	01	51917060	9		500	PC	MAGNET, RING 10GAUSS YOKE/CRT	P						
	054	01	51917061	7		150	PC	MAGNET, RING 14GAUSS YOKE/CRT	P						
	055	01	51917062	5		350	PC	MAGNET, RING 18GAUSS YOKE/CRT	P						
	056	01	51673824	2		1	PC	SPACER, HEX ALUM 4-40X1.250	P			12855			7835
	057	01	10127104	7		1	PC	MSCR PAN PHL 4-40 X 3/8	B			12855			7835
	058	01	62200937	1		REF	PC	SCHEMATIC, VIDEO DISPLAY	D						
	059	01	10125607	1		1	PC	WASHER FLT NO.10 STL CP	B		13037			7832	

B'TLD ARC 440

ASSEMBLY PARTS LIST

PRINT DATE	PAGE	FILE CHANGE NO.
08-14-78	3	00013037

DIV.	ASSEMBLY NUMBER	CD	REV.	DWG.	DESCRIPTION	MC	STATUS	STATUS DATE	ENG. RESP.	FILE DATE
0960	6137095	4	G	C	VIDEO DISPLAY ASSY	N	REL	10-19-76	CC6R1C	08-14-78

T	FIND NO	LI	PART NUMBER	CD	M	QUANTITY	U/M	PART DESCRIPTION	MC	YLD	ECO. NO. IN	ECO. NO. OUT	S/N	WK IN	WK OUT
								0042 TOTAL LINES							

62957400 E

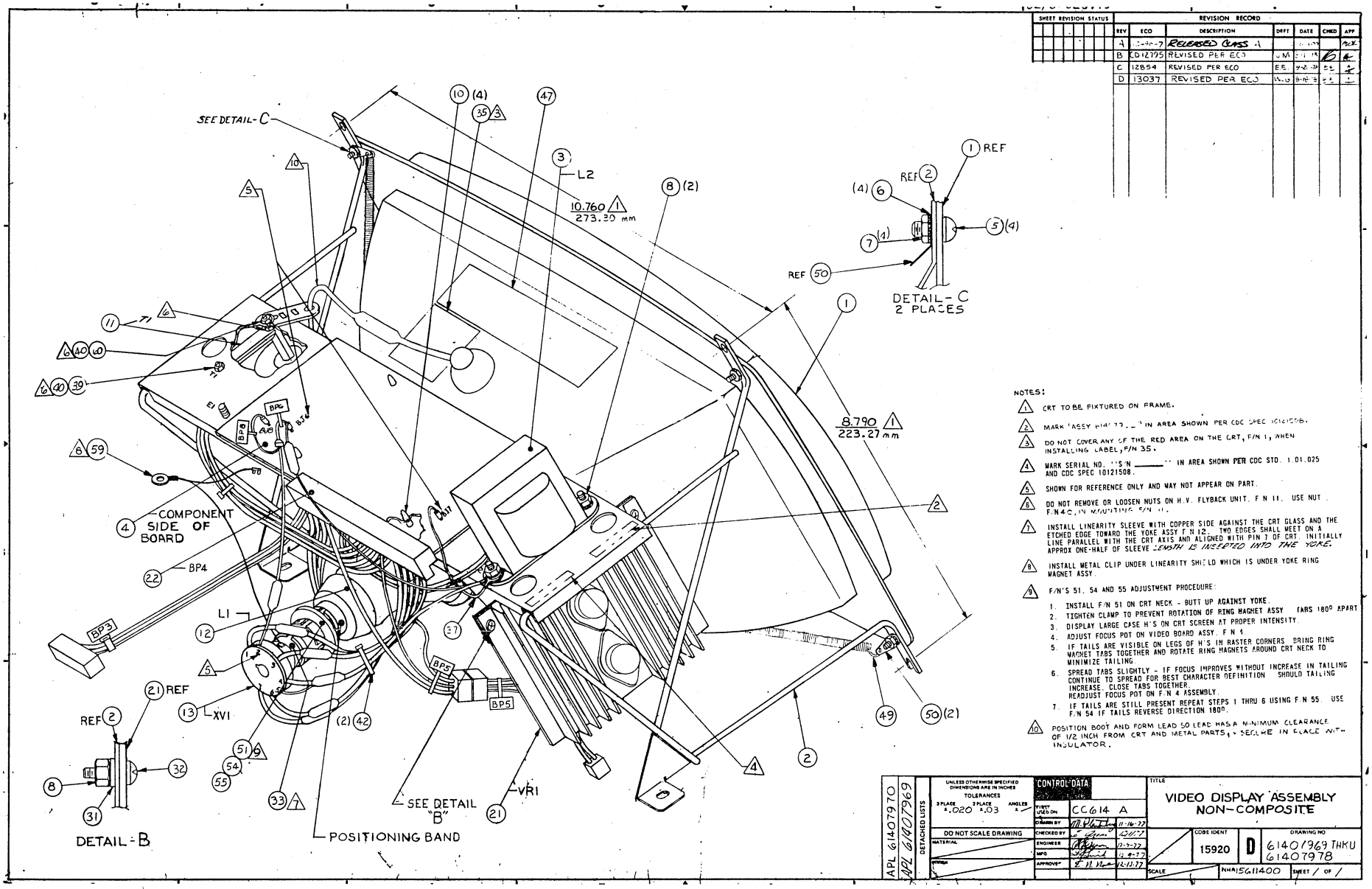

SHEET REVISION STATUS	REVISION RECORD						
	REV	ECO	DESCRIPTION	DRFT	DATE	CHKD	APP
	A	[illegible]	RELEASED CLASS A	[illegible]	[illegible]	[illegible]	[illegible]
	B	CD12795	REVISED PER ECO	J.M.	[illegible]	[illegible]	[illegible]
	C	12854	REVISED PER ECO	E.E.	4-2-77	[illegible]	[illegible]
	D	13037	REVISED PER ECO	W.G.	6-16-77	[illegible]	[illegible]

NOTES:

1. CRT TO BE FIXTURED ON FRAME.
2. MARK ASSY P/N 77[illegible] IN AREA SHOWN PER CDC SPEC 10121508.
3. DO NOT COVER ANY OF THE RED AREA ON THE CRT, F/N 1, WHEN INSTALLING LABEL, F/N 35.
4. MARK SERIAL NO. "S/N _____" IN AREA SHOWN PER CDC STD. 1.01.025 AND CDC SPEC 10121508.
5. SHOWN FOR REFERENCE ONLY AND MAY NOT APPEAR ON PART.
6. DO NOT REMOVE OR LOOSEN NUTS ON H.V. FLYBACK UNIT, F/N 11. USE NUT F/N 40 IN MOUNTING F/N 11.
7. INSTALL LINEARITY SLEEVE WITH COPPER SIDE AGAINST THE CRT GLASS AND THE ETCHED EDGE TOWARD THE YOKE ASSY F/N 12. TWO EDGES SHALL MEET ON A LINE PARALLEL WITH THE CRT AXIS AND ALIGNED WITH PIN 7 OF CRT. INITIALLY APPROX ONE-HALF OF SLEEVE LENGTH IS INSERTED INTO THE YOKE.
8. INSTALL METAL CLIP UNDER LINEARITY SHIELD WHICH IS UNDER YOKE RING MAGNET ASSY.
9. F/N'S 51, 54 AND 55 ADJUSTMENT PROCEDURE:
   1. INSTALL F/N 51 ON CRT NECK - BUTT UP AGAINST YOKE.
   2. TIGHTEN CLAMP TO PREVENT ROTATION OF RING MAGNET ASSY TABS 180° APART
   3. DISPLAY LARGE CASE H'S ON CRT SCREEN AT PROPER INTENSITY.
   4. ADJUST FOCUS POT ON VIDEO BOARD ASSY. F/N 4.
   5. IF TAILS ARE VISIBLE ON LEGS OF H'S IN RASTER CORNERS BRING RING MAGNET TABS TOGETHER AND ROTATE RING MAGNETS AROUND CRT NECK TO MINIMIZE TAILING.
   6. SPREAD TABS SLIGHTLY - IF FOCUS IMPROVES WITHOUT INCREASE IN TAILING CONTINUE TO SPREAD FOR BEST CHARACTER DEFINITION SHOULD TAILING INCREASE, CLOSE TABS TOGETHER. READJUST FOCUS POT ON F/N 4 ASSEMBLY.
   7. IF TAILS ARE STILL PRESENT REPEAT STEPS 1 THRU 6 USING F/N 55. USE F/N 54 IF TAILS REVERSE DIRECTION 180°.
10. POSITION BOOT AND FORM LEAD SO LEAD HAS A MINIMUM CLEARANCE OF 1/2 INCH FROM CRT AND METAL PARTS, SECURE IN PLACE WITH INSULATOR.

APL 61407970
APL 61407969
DETACHED LISTS

UNLESS OTHERWISE SPECIFIED DIMENSIONS ARE IN INCHES
TOLERANCES
3 PLACE ±.020 2 PLACE ±.03 ANGLES ±1°
DO NOT SCALE DRAWING
MATERIAL
FINISH

CONTROL DATA

FIRST USED ON	CC614 A	
DRAWN BY	[illegible]	11-16-77
CHECKED BY	[illegible]	12-1-77
ENGINEER	[illegible]	12-7-77
MFG	[illegible]	12-8-77
APPROVED	[illegible]	12-13-77

TITLE
VIDEO DISPLAY ASSEMBLY
NON-COMPOSITE

CODE IDENT 15920 | D | DRAWING NO 61401969 THRU 61407978

SCALE NHA15611400 | SHEET 1 OF 1

7-149/7-150

BUILD ARC 440

ASSEMBLY PARTS LIST

PRINT DATE	PAGE	FILE CHANGE NO.
08-14-78	1	00013037

DIV.	ASSEMBLY NUMBER	CD	REV.	DWG.	DESCRIPTION	MC	STATUS	STATUS DATE	ENG. RESP.	FILE DATE
0860	61407969	7	D	D	VIDEO DISPLAY ASSY	A	REL	12-13-77	CC5B1A	08-14-78

T	FIND NO	LI	PART NUMBER	CD	M	QUANTITY	U/M	PART DESCRIPTION	MC	YLD	ECO. NO. IN	ECO. NO. OUT	S/N	WK IN	WK OUT
	001	01	51907303	5		1	PC	CRT 12IN PHOS P4 GLOSS-MIN 60	P						
	002	01	71456300	4		1	PC	FRAME VIDEO DISPLAY	P						
	003	01	61407419	3		1	PC	CHOKE ASSY	A						
	004	02	90445834	6		1	PC	CD ASSY 6BND-1 (N/COMP VIDEO)	S			12795			7801
	004	03	90460619	1		1	PC	CD ASSY 6BND-0 (N/COMP VIDEO)	S		12795			7801	
	005	01	10127122	9		4	PC	MSCR PAN PHL 8-32X 3/8	B						
	006	01	10126402	6		4	PC	WSHR NO.8 EXT TOOTH LK TYP A	B						
	007	01	10122902	9		4	PC	NUT TWIN SELF LOCKING 8-32	B						
	008	01	10122901	1		4	PC	NUT TWIN SELF LOCKING 6-32	B						
	010	01	51777314	9		4	PC	SPRT, CKT RD 3/16 NYL FIG 2	P						
	011	01	61407695	8		1	PC	HIGH VOLTAGE TRANSFORMER ASSY	A			12854			7835
	011	02	61408075	2		1	PC	HIGH VOLTAGE TRANSFORMER ASSY	A		12854			7835	
	012	01	61407418	5		1	PC	YOKE ASSY	A						
	013	01	61407857	4		1	PC	CRT SOCKET ASSY	A						
	021	01	61407617	2		1	PC	REGULATOR ASSY +15V	A						
	022	01	61407420	1		1	PC	CABLE ASSY VIDEO DISPLAY	A						
	028	01	61407979	6		REF	PC	W/L VIDEO DISPLAY	D						
	029	01	94277409	2		2	PC	STRAP CABLE TIE TYPE 6	B			12854			7835
	030	01	16035100	3		REF	PC	RASTER SCAN CRT DISPLAY	D						
	031	01	10125605	5		2	PC	WSHR NO.6 TYP A PLAIN STL CP	B						
	032	01	10127113	8		2	PC	MSCR PAN PHL 6-32X 3/8	B						
	033	01	71468100	4		1	PC	SLEEVE LINEARITY CONTROL	B						

BUILD ARC 440

ASSEMBLY PARTS LIST

PRINT DATE	PAGE	FILE CHANGE NO.
08-14-78	2	00013037

DIV.	ASSEMBLY NUMBER	CD	REV.	DWG.	DESCRIPTION	MC	STATUS	STATUS DATE	ENG. RESP.	FILE DATE
0860	61407969	7	D	D	VIDEO DISPLAY ASSY	A	REL	12-13-77	CC5B1A	08-14-78

T	FIND NO	LI	PART NUMBER	CD	M	QUANTITY	U/M	PART DESCRIPTION	MC	YLD	ECO. NO. IN	ECO. NO. OUT	S/N	WK IN	WK OUT
	035	01	51916874	4		1	PC	PLATE, DANGER VINYL WHT/RED	P						
	037	01	61391111	4		1	PC	GND WIRE ASSY 3.0 20GA SKT	A						
	038	01	71492087	3		1	PC	INSULATOR, MOD PAPER UL	P			12854			7835
	039	01	10126101	4		3	PC	INT TOOTH LK WSHR #4	B			12854			7835
	039	02	10126101	4		2	PC	INT TOOTH LK WSHR #4	B		12854	13037		7835	7835
	039	03	10126101	4		1	PC	INT TOOTH LK WSHR #4	B		13037			7835	
	040	01	10125103	1		1	PC	NUT, HEX MSCR 4-40 STL CP/ZP	B			12854			7835
	040	02	10125103	1		2	PC	NUT, HEX MSCR 4-40 STL CP/ZP	B		12854			7835	
	042	01	94277400	1		2	PC	STRAP CABLE TIE TYPE 1	B						
	047	01	71479201	7		1	PC	LABEL, MON ADJ W/INTENSITY	P						
	049	01	71491984	2		1	PC	SPRING-EXT CRT GROUND	P						
	050	01	51817102	0		2	PC	LUG, R SLD TERM NO 8 FIG 1	B						
	051	01	51917060	9		500	PC	MAGNET, RING 10GAUSS YOKE/CRT	P						
	054	01	51917061	7		150	PC	MAGNET, RING 14GAUSS YOKE/CRT	P						
	055	01	51917062	5		350	PC	MAGNET, RING 18GAUSS YOKE/CRT	P						
	056	01	51673824	2		1	PC	SPACER, HEX ALUM 4-40X1.250	P			12854			7835
	057	01	10127104	7		1	PC	MSCR PAN PHL 4-40X 3/8	B			12854			7835
	058	01	62201007	2		REF	PC	SCH DIAG VIDEO DISP	D			12854			7835
	058	02	62201017	1		REF	PC	LOGIC DIAG 6BND-0	D		12854			7835	
	059	01	71492174	9		1	PC	GROUND CLIP CRT	A						
	060	01	10125607	1		1	PC	WASHER FLT NO.10 STL CP	B		13037			7832	

BUILD ARC 440

ASSEMBLY PARTS LIST

PRINT DATE	PAGE	FILE CHANGE NO.
08-14-78	3	00013037

DIV.	ASSEMBLY NUMBER	CD	REV.	DWG.	DESCRIPTION	MC	STATUS	STATUS DATE	ENG. RESP.	FILE DATE
0860	61407969	7	D	D	VIDEO DISPLAY ASSY	A	REL	12-13-77	CC5B1A	08-14-78

T	FIND NO	LI	PART NUMBER	CD	M	QUANTITY	U/M	PART DESCRIPTION	MC	YLD	ECO. NO. IN	ECO. NO. OUT	S/N	WK IN	WK OUT
								0043 TOTAL LINES							

62957400 E

7-153/7-154

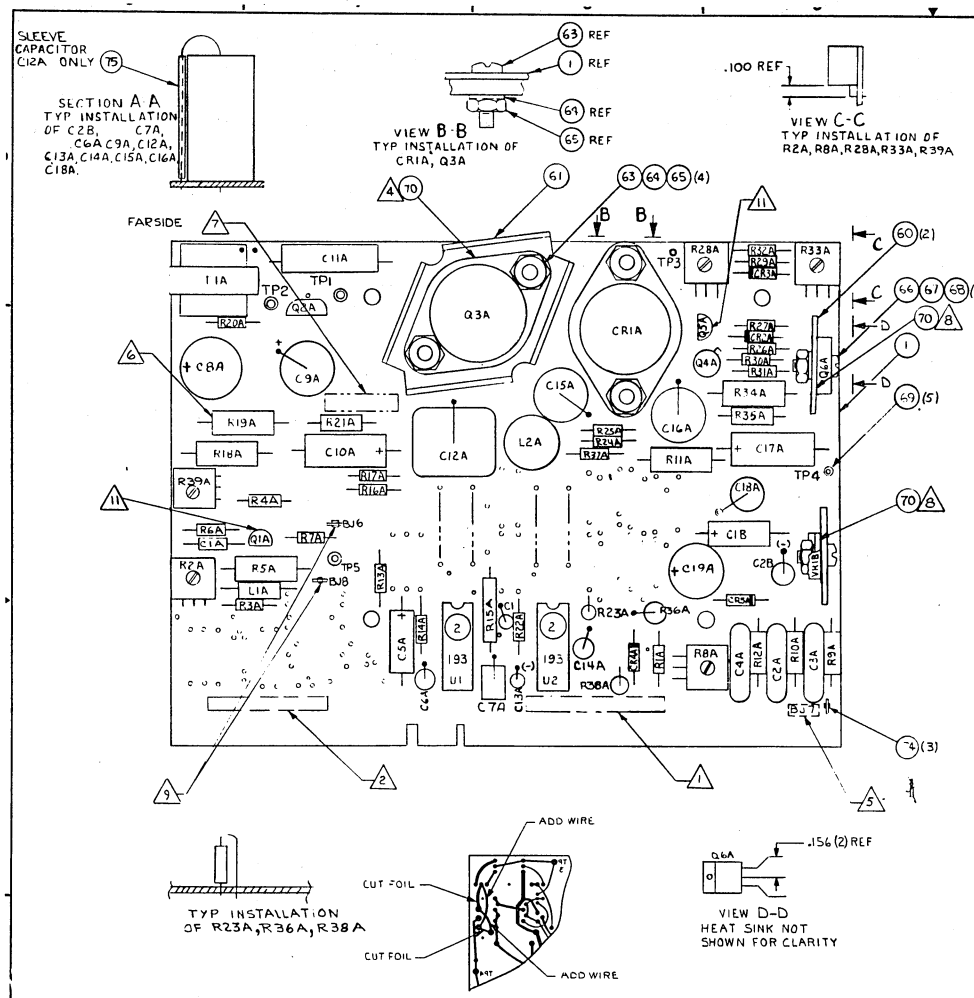

| SHEET REVISION STATUS | | |

BUILD ARC 214

ASSEMBLY PARTS LIST

PRINT DATE	PAGE	FILE CHANGE NO.
02-13-79	1	00013307

DIV.	ASSEMBLY NUMBER	CD	REV.	DWG.	DESCRIPTION	MC	STATUS	STATUS DATE	ENG. RESP.	FILE DATE
0860	90445834	6	E	D	CD ASSY 6BND=1 (N/COMP VIDEO)	S	REL	11-18-77	CC614A	02-13-79

T	FIND NO	LI	PART NUMBER	CD	M	QUANTITY	U/M	PART DESCRIPTION	MC	YLD	ECO. NO. IN	ECO. NO. OUT	S/N	WK IN	WK OUT
	001	01	90460647	2		1	PC	PW BD 6BND=0 COMP VIDEO	P						
	002	01	50254300	2		2	PC	IC 74123 193 TTL 2 RETGR MVB	P						
	003	01	17705916	9		1	PC	RES FXD COMP 150K OHM 5P 1/4W	P						
	004	01	51785502	9		1	PC	RES VAR CERM 500 OHM 20P .5W	P						
	005	01	24500031	0		2	PC	RES FXD COMP 47 OHM 5P 1/4W	P						
	006	01	24500079	9		1	PC	RES FXD COMP 4700 OHM 5P 1/4W	P						
	007	01	24507161	8		1	PC	RES FXD COMP 820 OHM 5P 1WATT	P						
	008	01	24500047	6		1	PC	RES FXD COMP 220 OHM 5P 1/4W	P						
	009	01	51785513	6		1	PC	RES VAR CERM 2MEG OHM 20P .5W	P						
	010	01	17726504	4		2	PC	RES FXD COMP 47000 OHM .5W 5P	P						
	011	01	24500163	1		1	PC	RES FXD COMP 1000 OHM 5P 1/2W	P						
	012	01	24507106	3		1	PC	RES FXD COMP 16 OHM 5P 1WATT	P						
	013	01	24500063	3		1	PC	RES FXD COMP 1000 OHM 5P 1/4W	P						
	014	01	94364444	7		1	PC	RES FXD FM 28.7K OHM 1P 1/4W	P						
	015	01	94364392	8		1	PC	RES FXD FM 9090 OHM 1P 1/4W	P						
	016	01	24500054	2		2	PC	RES FXD COMP 430 OHM 5P 1/4W	P						
	017	01	24565717	6		1	PC	RES FXD WW 1.20HMS 2W 5P	P						
	018	01	24538225	4		1	PC	RES FXD WW 82 OHM 5P 3WATT	P			13307			7916
	018	02	94318698	1		1	PC	RES FXD [illegible] W	P		13307			7916	
	019	01	24500073	2		1	PC	RES FXD COMP 2700 OHM 5P 1/4W	P						
	020	01	24500103	7		1	PC	RES FXD COMP 3.3 OHM 5P 1/2W	P						

BUILD ARC 214

ASSEMBLY PARTS LIST

PRINT DATE	PAGE	FILE CHANGE NO.
02-13-79	2	00013307

DIV.	ASSEMBLY NUMBER	CD	REV.	DWG.	DESCRIPTION	MC	STATUS	STATUS DATE	ENG. RESP.	FILE DATE
0860	90445834	6	E	D	CD ASSY 6BND=1 (N/COMP VIDEO)	S	REL	11-18-77	CC614A	02-13-79

T	FIND NO	LI	PART NUMBER	CD	M	QUANTITY	U/M	PART DESCRIPTION	MC	YLD	ECO. NO. IN	ECO. NO. OUT	S/N	WK IN	WK OUT
	021	01	17705914	5		2	PC	RES FXD COMP 47K OHM 5P 1/4W	P						
	022	01	24500070	8		1	PC	RES FXD COMP 2000 OHM 5P 1/4W	P						
	023	01	24500056	7		1	PC	RES FXD COMP 510 OHM 5P 1/4W	P						
	024	01	51785586	6		1	PC	RES VAR CERM 10K OHM 20P .5W	P						
	025	01	17705915	1		1	PC	RES FXD COMP 130K OHM 5P 1/4W	P						
	026	01	24500043	5		2	PC	RES FXD COMP 150 OHM 5P 1/4W	P						
	027	01	51785500	3		1	PC	RES VAR CERM 100 OHM 20P .5W	P						
	028	01	24507152	7		1	PC	RES FXD COMP 5.6 OHM 5P 1WATT	P						
	029	01	24500153	2		1	PC	RES FXD COMP 390 OHM 5P 1/2W	P						
	030	01	24507183	2		1	PC	RES FXD COMP 6800 OHM 5P 1W	P						
	031	01	24500071	6		2	PC	RES FXD COMP 2200 OHM 5P 1/4W	P						
	032	01	51A39125	5		1	PC	CAP FXD CER 1200PF 10P 100VDC	P						
	033	01	51909000	6		3	PC	CAP .01UF 20P 1500V SPARK GAP	P						
	034	01	24504363	3		1	PC	CAP FXD TANT 4.7UF 20P 15VDCW	P						
	035	01	24506807	7		2	PC	CAP FXD MYL .01UF 10P 100VDCW	P						
	036	01	95691133	3		1	PC	CAP ELEC 270UF -10+100P 25VDC	P						
	037	01	51A68700	9		1	PC	CAP F/ELEC 50UF -10+75P 50V	P						
	038	01	24505275	8		1	PC	CAP FXD TANT 150UF 10P 6VDCW	P						
	039	01	24506835	8		1	PC	CAP FXD MYL .033UF 10P 400VDC	P						
	040	01	51917720	8		1	PC	CAP 10.06 MFD 100 VDC 10P	P						
	041	01	24504361	7		1	PC	CAP FXD TANT 2.2UF 20P 15VDCW	P						

BUILD ARC 214

ASSEMBLY PARTS LIST

PRINT DATE	PAGE	FILE CHANGE NO.
02-13-79	3	00013307

DIV.	ASSEMBLY NUMBER	CD	REV.	DWG.	DESCRIPTION	MC	STATUS	STATUS DATE	ENG. RESP.	FILE DATE
0860	90445834	6	E	D	CD ASSY 6BND=1 (N/COMP VIDEO)	S	REL	11-18-77	CC614A	02-13-79

T	FIND NO	LI	PART NUMBER	CD	M	QUANTITY	U/M	PART DESCRIPTION	MC	YLD	ECO. NO. IN	ECO. NO. OUT	S/N	WK IN	WK OUT
	042	01	24506817	6		2	PC	CAP FXD MYL .47UF 10P 100VDCW	P						
	043	01	51879110	8		1	PC	CAP FXD TANT 470UF 10P 6VDCW	P						
	044	01	36180733	2		1	PC	CAP FXD MYL .33UF 20P 400VDCW	P						
	045	01	95691153	1		1	PC	CAP ELEC 68UF -10+100P 60VDCW	P						
	046	01	24500091	4		1	PC	RES FXD COMP 15K OHM 5P 1/4W	P						
	047	01	24504333	6		2	PC	CAP FXD TANT 2.2UF 20P 35VDCW	P						
	048	01	51906200	2		1	PC	DIO GERMN HI VOLT 320V 7A	P						
	049	02	51907385	1		2	PC	DIO IN4148 10MA MICRO SIL 30V	P		12937			7840	
	050	01	95637355	4		2	PC	DIO IN4005 600PIV SIL 1.1V/1A	P						
	051	01	51907600	4		1	PC	XSTR TO-92 NPN SIL PLASTIC	P						
	052	01	51908100	4		1	PC	XSTR SI NPN	P						
	053	02	51917817	2		1	PC	TRANS SIL PWR PNP	P						
	054	01	51003059	6		1	PC	XSTR 0D1 106 EPITAX NPN SIL	P						
	055	01	51906900	9		1	PC	XSTR TO-92 NPN SIL	P						
	056	01	51917887	5		1	PC	TRANSISTOR NPN 250V 1A TO-220	P						
	057	01	51907900	8		1	PC	XFMR, STEP-DOWN S/I 16V 165MA	P						
	058	01	94233926	8		1	PC	INDUCTOR 15MICRO HEN	P						
	059	01	51907500	6		1	PC	COIL VAR 7-42MICRO HEN	P						
	060	01	51906602	1		2	PC	HT SINK, SEMI FIG 3 ALUM BLK	P						
	061	01	51911000	1		1	PC	HT SINK, TO-3 SEMI ALUM BLK	P						
	062	01	15151500	4		1	PC	IC UA7805 5V 357A POS V RGLTR	P						

BUILD ARC 214

ASSEMBLY PARTS LIST

PRINT DATE	PAGE	FILE CHANGE NO.
02-13-79	4	00013307

DIV.	ASSEMBLY NUMBER	CD	REV.	DWG.	DESCRIPTION	MC	STATUS	STATUS DATE	ENG. RESP.	FILE DATE
0860	90445834	6	E	D	CD ASSY 6BND=1 (N/COMP VIDEO)	S	REL	11-18-77	CC614A	02-13-79

T	FIND NO	LI	PART NUMBER	CD	M	QUANTITY	U/M	PART DESCRIPTION	MC	YLD	ECO. NO. IN	ECO. NO. OUT	S/N	WK IN	WK OUT
	063	02	92780164	7		4	PC	SCR PAN HD SLT 6-32X1/2	B		12715			7812	
	064	01	10126401	8		4	PC	WSHR NO.6 EXT TOOTH LK TYP A	B						
	065	01	10125105	6		4	PC	NUT, HEX MSCR 6-32 STL CP/ZP	B						
	066	01	10127104	7		2	PC	MSCR PAN PHL 4-40X 3/8	B						
	067	01	10126400	0		2	PC	WSHR NO.4 EXT TOOTH LK TYP A	B						
	068	01	10125103	1		2	PC	NUT, HEX MSCR 4-40 STL CP/ZP	B						
	069	01	51776406	4		5	PC	TERM STUD TURRET .284 1/16	P						
	070	02	51003962	1		.001	OZ	PASTE, HEAT XFR CMPD NON-COND	B		13025			7837	
	071	01	16006500	9		REF	PC	FABRICATION SPECIFICATION	D						
	072	01	10121508	5		REF	PC	MARKING METHODS (SILK-SC,ETC)	D						
	073	01	90445833	8		REF	PC	SCH DIAG 6BND=1	D						
	074	01	51912300	4		3	PC	PIN, TERM PC MTG .031X.062	P						
	075	01	51797420	0		.200	FT	TBG, INS .034DIA T/W NAT TEF	B						
	076	01	17720531	7		1	PC	RES FXD COMP 0.62 MEG 1/2W 5P	P						
	077	01	24521113	1		1	PC	CAP FXD MYL .01UF 5P 100VDCW	P						
	078	01	62201007	2		REF	PC	SCH DIAG VIDEO DISP	D						
	079	01	51839147	9		1	PC	CAP FXD CER .100UF 10P 100VDC	P						
	080	01	24500095	5		1	PC	RES FXD COMP 22K OHM 5P 1/4W	P						
	081	02	51785509	4		1	PC	RES VAR CERM 100K OHM 20P .5W	P		12668			7750	
	082	01	15019500	4		REF	PC	REQ/INSTALLATION OF EXT CKTS	D						
	083	01	52629949	0		.167	FT	WIR WW 3 GA SLD WHT UL KYNAR	W						

BUILD ARC 214

ASSEMBLY PARTS LIST

PRINT DATE	PAGE	FILE CHANGE NO.
02-13-79	5	00013307

DIV.	ASSEMBLY NUMBER	CD	REV.	DWG.	DESCRIPTION	MC	STATUS	STATUS DATE	ENG. RESP.	FILE DATE
0860	90445834	6	E	D	CD ASSY 6BND-1 (N/COMP VIDEO)	S	REL	11-18-77	CC614A	02-13-79

T	FIND NO	LI	PART NUMBER	CD	M	QUANTITY	U/M	PART DESCRIPTION	MC	YLD	ECO. NO. IN	ECO. NO. OUT	S/N	WK IN	WK OUT
								0084 TOTAL LINES							

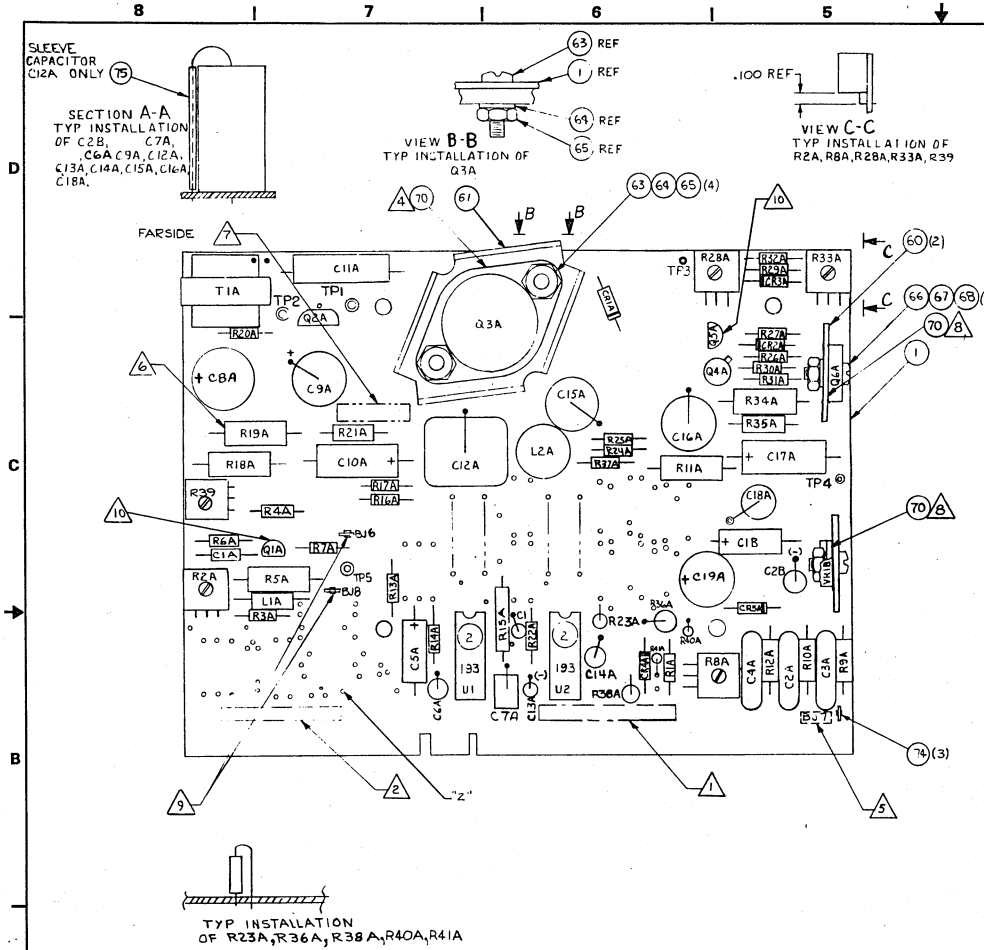

CROSS REFERENCE TABLE	
FIND NO	REFERENCE DESIGNATION
3	R1A
4	R2A
5	R3A, R6A
6	R29A
7	R5A
8	R7A
9	R8A
10	R9A, R12A
11	R10A
12	R11A
13	R13A
14	R14A
15	R15A
16	R18A, R17A
17	R18A
18	R19A
19	R20A
20	R21A
21	R22A, R23A
22	R26A
23	R27A
24	R28A
25	R30A
26	R31A
27	R33A
28	R34A
29	R35A
30	R36A
31	R24A, R25A
32	C1A
33	C2A, C3A, C4A
34	C5A
35	C6A, C14A
36	C8A
37	C9A
38	C10A
39	C11A
40	C12A
41	C13A
42	C15A, C16A
43	C17A
44	C18A
45	C19A
46	R37A
47	C1B, C2B
48	CR1A
49	CR2A, CR3A
50	CR4A, CR5A
51	Q1A
52	Q2A
53	Q3A
54	Q4A
55	Q5A
56	Q6A
57	T1A
58	L1A
59	L2A
62	VR1B
76	R38A
77	C7A
79	C1
80	R9A
81	R39
83	R40A
84	R41A
87	R32A

10 Q1A, Q5A TRANSISTORS MAY HAVE MOUNTING GAP UP TO A MAX. OF .150 FROM BOARD SURFACE.

NOTES:

1. MARK ASSY. NO. AND REV LEVEL .12 HIGH. WHITE IN AREA SHOWN. PER CDC SPEC. 10121508.
2. MARK SERIAL NO. IN AREA SHOWN PER RVLOPS P&P 80:20:34 AND PER MARKING REQUIREMENTS IN NOTE 1.
3. FIND NUMBERS, REFERENCE DESIGNATIONS AND ELEMENT IDENTIFIERS ARE FOR REFERENCE ONLY AND DO NOT APPEAR ON PART.
4. APPLY HEAT TRANSFER COMPOUND FIND NO. (70) BETWEEN Q3A FIND NO. (53) AND HEAT SINK FIND NO. (63) AS REQUIRED.
5. MARK "BJ7" IN AREA SHOWN PER MARKING REQUIREMENTS IN NOTE 1.
6. R18A(F/N 17) AND R19A(F/N 18) TO BE MOUNTED SO THAT A MINIMUM OF .25 INCH AIR SPACE EXISTS BETWEEN RESISTOR BODY AND CIRCUIT BOARD.
7. MARK CARD TYPE "6BND-0" IN AREA SHOWN PER MARKING REQUIREMENTS IN NOTE 1.
8. APPLY HEAT TRANSFER COMPOUND FIND NO. (79) BETWEEN Q6A FIND NO. (56) AND HEAT SINK FIND NO. (80) AND BETWEEN VR1B FIND NO. (62) AND HEAT SINK FIND NO. NOTE: COMPOUND IS APPLIED TO SIDE OF CCA AND SIDE WHICH IS OPPOSITE TO SIDE SHOWING MANUFACTURER'S NUMBER.
9. ORIENT PIN AS SHOWN.

| SHEET REVISION STATUS | | |

BUILD ARC 214

ASSEMBLY PARTS LIST

PRINT DATE 06-10-81 | PAGE 1 | FILE CHANGE NO. 00014708

DIV	ASSEMBLY NUMBER	CD.	REV.	DWG.	DESCRIPTION	MC	STATUS	STATUS DATE	ENG. RESP.	FILE DATE
0860	90460619	1	S	D	CD ASSY 6BND-0 (N/COMP VIDEO)	S	REL	10-19-76	QSE19502	06-10-81

T	FIND NO.	LI	PART NUMBER	CD	M	QUANTITY	U/M	PART DESCRIPTION	MC	YLD	ECO. NO. IN	ECO. NO. OUT	S/N	WK IN	WK OUT
	001	06	90460647	2		1	PC	REPLACED BY 90446174 13943	P		11926	13943		7731	8020
	001	07	90446174	6		1	PC	PW BD MULTI-USE	P		13943			8020	
	002	01	50254300	2		2	PC	IC 74123 193 TTL 2 RETGR MVB	P						
	003	01	17705916	9		1	PC	RES FXD COMP 150K OHM 5P 1/4W	P						
	004	01	51785502	9		1	PC	RES VAR CERM 500 OHM 20P .5W	P						
	005	01	24500031	0		2	PC	RES FXD COMP 47 OHM 5P 1/4W	P						
	006	01	24500079	9		1	PC	RES FXD COMP 4700 OHM 5P 1/4W	P						
	007	01	24507161	8		1	PC	RES FXD COMP 820 OHM 5P 1WATT	P						
	008	01	24500047	6		1	PC	RES FXD COMP 220 OHM 5P 1/4W	P						
	009	01	51785513	6		1	PC	RES VAR CERM 2MEG OHM 20P .5W	P						
	010	01	17720504	4		2	PC	RES FXD COMP 47000 OHM .5W 5P	P						
	011	01	24500163	1		1	PC	RES FXD COMP 1000 OHM 5P 1/2W	P						
	012	01	24507106	3		1	PC	RES FXD COMP 16 OHM 5P 1WATT	P						
	013	01	24500063	3		1	PC	RES FXD COMP 1000 OHM 5P 1/4W	P						
	014	01	17705902	9		1	PC	RES FXD COMP 39K OHM 5P 1/4W	P						
	015	01	94360384	5		1	PC	RES FXD FM 7500 OHM 1P 1/4W	P						
	016	01	24500054	2		2	PC	RES FXD COMP 430 OHM 5P 1/4W	P						
	017	01	24565717	6		1	PC	RES FXD WW 1.20HMS 2W 5P	P						
	018	02	94318698	1		1	PC	RES FXD W W	P		13307			7916	
	019	01	24500073	2		1	PC	RES FXD COMP 2700 OHM 5P 1/4W	P						
	020	01	24500103	7		1	PC	RES FXD COMP 3.3 OHM 5P 1/2W	P						

BUILD ARC 214

ASSEMBLY PARTS LIST

PRINT DATE 06-10-81 | PAGE 2 | FILE CHANGE NO. 00014708

DIV	ASSEMBLY NUMBER	CD.	REV.	DWG.	DESCRIPTION	MC	STATUS	STATUS DATE	ENG. RESP.	FILE DATE
0860	90460619	1	S	D	CD ASSY 6BND-0 (N/COMP VIDEO)	S	REL	10-19-76	QSE19502	06-10-81

T	FIND NO.	LI	PART NUMBER	CD	M	QUANTITY	U/M	PART DESCRIPTION	MC	YLD	ECO. NO. IN	ECO. NO. OUT	S/N	WK IN	WK OUT
	021	01	17705904	5		2	PC	RES FXD COMP 47K OHM 5P 1/4W	P						
	022	01	24500070	8		1	PC	RES FXD COMP 2000 OHM 5P 1/4W	P						
	023	01	24500056	7		1	PC	RES FXD COMP 510 OHM 5P 1/4W	P						
	024	01	51785506	0		1	PC	RES VAR CERM 10K OHM 20P .5W	P						
	025	01	17705915	1		1	PC	RES FXD COMP 130K OHM 5P 1/4W	P						
	026	01	24500043	5		2	PC	RES FXD COMP 150 OHM 5P 1/4W	P			14708			8124
	026	02	24500043	5		1	PC	RES FXD COMP 150 OHM 5P 1/4W	P		14708			8124	
	027	01	51785500	3		1	PC	RES VAR CERM 100 OHM 20P .5W	P						
	028	01	24507152	7		1	PC	RES FXD COMP 5.6 OHM 5P 1WATT	P						
	029	01	24500153	2		1	PC	RES FXD COMP 390 OHM 5P 1/2W	P						
	030	01	24507183	2		1	PC	RES FXD COMP 6800 OHM 5P 1W	P						
	031	01	24500071	6		2	PC	RES FXD COMP 2200 OHM 5P 1/4W	P						
	032	01	24501769	4		1	PC	CAP FXD CER 150PF 20P 100VDCW	P						
	033	01	51908000	6		3	PC	CAP .01UF 20P 1500V SPARK GAP	P						
	034	01	24504363	3		1	PC	CAP FXD TANT 4.7UF 20P 15VDCW	P						
	035	01	24506807	7		2	PC	CAP FXD MYL .01UF 10P 100VDCW	P						
	036	01	95691133	3		1	PC	CAP ELEC 270UF -10+100P 25VDC	P						
	037	01	51868700	9		1	PC	CAP F/ELEC 50UF -10+75P 50V	P						
	038	01	24505275	8		1	PC	CAP FXD TANT 150UF 10P 6VDCW	P						
	039	01	24506835	8		1	PC	CAP FXD MYL .033UF 10P 400VDC	P						
	040	02	51917720	8		1	PC	CAP 10.00 MFD 100 VDC 10P	P		12238			7728	

BUILD ARC 214

ASSEMBLY PARTS LIST

PRINT DATE	PAGE	FILE CHANGE NO.
06-10-81	3	00014708

DIV	ASSEMBLY NUMBER	CD.	REV.	DWG.	DESCRIPTION	MC	STATUS	STATUS DATE	ENG. RESP.	FILE DATE
0860	90460619	1	S	D	CD ASSY 6BND-0 (N/COMP VIDEO)	S	REL	10-19-76	QSE19502	06-10-81

T	FIND NO.	LI	PART NUMBER	CD	M	QUANTITY	U/M	PART DESCRIPTION	MC	YLD	ECO. NO. IN	ECO. NO. OUT	S/N	WK IN	WK OUT
	041	01	24504361	7		1	PC	CAP FXD TANT 2.2UF 20P 15VDCW	P						
	042	01	24506817	6		2	PC	CAP FXD MYL .47UF 10P 100VDCW	P						
	043	01	51879110	8		1	PC	CAP FXD TANT 470UF 10P 6VDCW	P						
	044	02	36180752	2		1	PC	CAP FXD MYL 0.33MFD 20P 400V	P		12810			7835	
	045	01	95691153	1		1	PC	CAP ELEC 68UF -10+100P 60VDCW	P						
	046	01	24500091	4		1	PC	RES FXD COMP 15K OHM 5P 1/4W	P						
	047	01	24504333	6		2	PC	CAP FXD TANT 2.2UF 20P 35VDCW	P						
	048	01	51908200	2		1	PC	DIO GERMN HI VOLT 320V 7A	P			14001			8028
	048	02	51610800	8		1	PC	DIO, SILICON RECT 200V 3A	P		14001			8028	
	049	02	51007385	1		2	PC	DIO IN4148 10MA MICRO SIL 30V	P		12937			7840	
	050	02	95691502	9		2	PC	RECT IN5619	P		13505			7921	
	051	01	51907600	4		1	PC	XSTR TO-92 NPN SIL PLASTIC	P						
	052	01	51908100	4		1	PC	XSTR SI NPN	P						
	053	02	51917817	2		1	PC	TRANS SIL PWR PNP	P		12492			7747	
	054	01	51003059	6		1	PC	XSTR DD1 106 EPITAX NPN SIL	P						
	055	01	51906900	9		1	PC	XSTR TO-92 NPN SIL	P						
	056	01	95590500	5		1	PC	XSTR POWER NPN SIL	P						
	057	01	51907900	8		1	PC	XFMR, STEP-DOWN 5/1 16V 15MA	P						
	058	01	94233926	8		1	PC	INDUCTOR 15MICRO HEN	P						
	059	01	51907500	6		1	PC	COIL VAR 7-42MICRO HEN	P						
	060	01	51906602	1		2	PC	HT SINK, SEMI FIG 3 ALUM BLK	P						

BUILD ARC 214

ASSEMBLY PARTS LIST

PRINT DATE	PAGE	FILE CHANGE NO.
06-10-81	4	00014708

DIV	ASSEMBLY NUMBER	CD.	REV.	DWG.	DESCRIPTION	MC	STATUS	STATUS DATE	ENG. RESP.	FILE DATE
0860	90460619	1	S	D	CD ASSY 6BND-0 (N/COMP VIDEO)	S	REL	10-19-76	QSE19502	06-10-81

T	FIND NO.	LI	PART NUMBER	CD	M	QUANTITY	U/M	PART DESCRIPTION	MC	YLD	ECO. NO. IN	ECO. NO. OUT	S/N	WK IN	WK OUT
	061	01	51911000	1		1	PC	HT SINK, TO-3 SEMI ALUM BLK	P						
	062	01	15151500	4		1	PC	IC UA7800+5 357A POS V RGLTR	P						
	063	02	92780164	7		4	PC	MSCR PAN SLT 6-32X1/2 SST P	B		12715	14001		7812	8028
	063	03	92780164	7		2	PC	MSCR PAN SLT 6-32X1/2 SST P	B		14001			8028	
	064	01	10126401	8		4	PC	WSHR, NO.6 EXT/T LK STL ZP	B			14001			8028
	064	02	10126401	8		2	PC	WSHR, NO.6 EXT/T LK STL ZP	B		14001			8028	
	065	01	10125105	6		4	PC	NUT, HEX 6-32 MSCR STL ZP	B			14001			8028
	065	02	10125105	6		2	PC	NUT, HEX 6-32 MSCR STL ZP	B		14001			8028	
	066	01	10127104	7		2	PC	MSCR PAN PHL 4-40X.375 STL ZP	B						
	067	01	10126400	0		2	PC	WSHR, NO.4 EXT/T LK STL ZP	B						
	068	01	10125103	1		2	PC	NUT, HEX 4-40 MSCR STL ZP	B						
	069	01	51776406	4		5	PC	TERM STUD TURRET .084 1/16	P			14133			8040
	070	01	51003962	1		AR	OZ	PASTE, HEAT XFR CMPD NON-COND	B						
	071	01	15006500	9		REF	PC	FABRICATION SPECIFICATION	D						
	072	01	10121508	5		REF	PC	MARKING, INK STP-STENCIL-S/C	D						
	073	01	90460618	3		REF	PC	SCH DIAG 6BND (N/COMP VIDEO)	D						
	074	01	51912300	4		3	PC	PIN, TERM PC MTG .031X.062	P						
	075	01	51797420	0		200	FT	TBG, INS .034DIA T/W NAT TEF	B						
	076	01	17720531	7		1	PC	RES FXD COMP 0.62 MEG 1/2W 5P	P						
	077	01	24521113	1		1	PC	CAP FXD MYL .01UF 5P 100VDCW	P						
	078	01	62200937	1		REF	PC	SCHEMATIC, VIDEO DISPLAY	D						
	079	01	51839147	9		1	PC	CAP FXD CER .100UF 10P 100VDC	P						

BUILD ARC 214

ASSEMBLY PARTS LIST

PRINT DATE	PAGE	FILE CHANGE NO.
06-10-81	5	00014708

DIV	ASSEMBLY NUMBER	CD.	REV.	DWG.	DESCRIPTION	MC	STATUS	STATUS DATE	ENG. RESP.	FILE DATE
0860	90460619	1	S	D	CD ASSY 6BND_0 (N/COMP VIDEO)	S	REL	10-19-76	QSE19502	06-10-81

T	FIND NO.	LI	PART NUMBER	CD	M	QUANTITY		U/M	PART DESCRIPTION	MC	YLD	ECO. NO. IN	ECO. NO. OUT	S/N	WK IN	WK OUT
	080	01	24500095	5		1		PC	RES FXD COMP 22K OHM 5P 1/4W	P						
	081	02	51785509	4		1		PC	RES VAR CERM 100K OHM 20P .5W	P		11747A			7702	
	082	02	51006067	6			001	OZ	ADHESIVE, SILIC	B		13025	13943		7837	8026
	083	02	17705932	6		1		PC	RES FXD COMP 680K OHM 5P 1/4W	P		13647			7935	
	084	02	17705933	4		1		PC	RES FXD COMP 750K OHM 5P 1/4W	P		13647			7935	
	085	01	62201002	3		REF		PC	SCH DIAG 6BND-0 VIDEO DISPLAY	D		14001			8028	
	086	01	62201017	1		REF		PC	LOGIC DIAG 6BND-0	D		14001			8028	
	087	01	24500041	9		1		PC	RES FXD COMP 120 OHM 5P 1/4W	P		14708			8124	
									0093 TOTAL LINES							

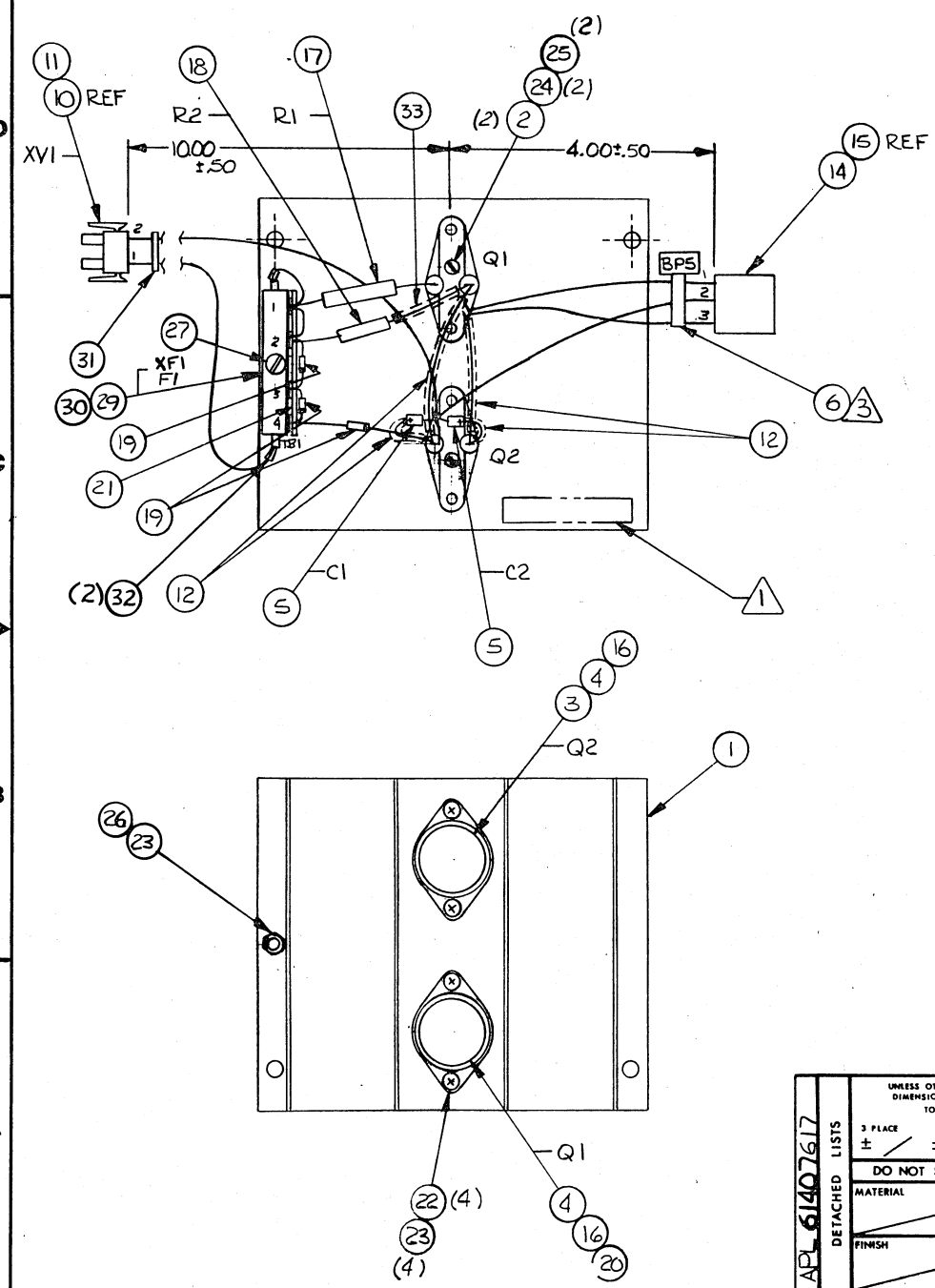

SHEET REVISION STATUS	REVISION RECORD						
	REV	ECO	DESCRIPTION	DRFT	DATE	CHKD	APP
	A	10653-67	RELEASED CLASS A	/	10-19-76	/	M.C.T.
	B	12559	REVISED PER ECO	WJH	11-9-77	WJH	[illegible]
	C	12827	P/L CHANGE ONLY	WJG	5-25-78	EE	[illegible] 5/31/78

NOTES:

1. MARK "ASSY 61407617" IN AREA SHOWN PER CDC SPEC 10121508.
2. REFERENCE DESIGNATIONS ARE SHOWN FOR REFERENCE ONLY AND MAY NOT APPEAR ON PART.
3. APPLY LABEL TO CABLE PER CDC DWG 82191061, (METHOD 6). MARK AS SHOWN.

61407617

APL 61407617

DETACHED LISTS

UNLESS OTHERWISE SPECIFIED DIMENSIONS ARE IN INCHES TOLERANCES
3 PLACE ± / 2 PLACE ± / ANGLES ± /

DO NOT SCALE DRAWING

MATERIAL

FINISH

FIRST USED ON	CC6B1C	
DWN	D Garner	10/11/76
CHKD	E. Greene	10/12/76
ENGR	[illegible]	10/14/76
MFG	[illegible]	10/14/76
APPR	[illegible]	10-15-76

TITLE

REGULATOR ASS'Y (+15 VOLTS)

CODE IDENT 15920 | C | DRAWING NO 61407617

SCALE NONE | NHA61370905 | SHEET / OF /

BUILD ARC 230

ASSEMBLY PARTS LIST

PRINT DATE 04-24-78 | PAGE 1 | FILE CHANGE NO. 00012827

DIV.	ASSEMBLY NUMBER	CD	REV.	DWG.	DESCRIPTION	MC	STATUS	STATUS DATE	ENG. RESP.	FILE DATE
0860	61407617 2		C	C	REGULATOR ASSY +15V	A	REL	10-19-76	CC6BIC	04-24-78

T	FIND NO	LI	PART NUMBER	CD	M	QUANTITY	U/M	PART DESCRIPTION	MC	YLD	ECO. NO. IN	ECO. NO. OUT	S/N	WK IN	WK OUT
	001	01	51906303	6		1	PC	HT SINK, SEMI FIG 5 ALUM BLK	P						
	002	01	51605400	4		2	PC	SOCKET TRANSISTOR TO-3	P						
	003	01	15130504	2		1	PC	IC UA7800+15 355E POS V RGLTR	P						
	004	02	51003962	1		001	OZ	PASTE, HEAT XFR CMPD NON-COND	B		11774			7723	
	005	01	24504333	6		2	PC	CAP FXD TANT 2.2UF 20P 35VDCW	P						
	006	01	94277409	2		1	PC	STRAP CABLE TIE TYPE 6	B						
	007	01	61407618	0		REF	PC	W/L	D						
	008	01	93463000	5		1	250	FT WIR 18GA STRD BLK 300V UL PVC	W						
	009	01	93463222	5		1	625	FT WIR 18GA STRD RED 300V UL PVC	W						
	010	01	51906200	4		2	PC	CONTACT, SKT 20-14GA STRIP T	P						
	011	01	51906000	8		1	PC	CONN PLUG 2 PIN	P						
	012	01	51797420	0		400	FT	TBG, INS .034DIA T/W NAT TEF	B						
	013	01	24501801	5		375	FT	WIRE BUSS 22GA SOLID CU TP	W						
	014	01	51905901	8		1	PC	CONN RECPT 3 CONTACTS	P						
	015	01	51906204	6		3	PC	CONTACT, SKT 20-14GA STRIP G	P						
	016	01	16798719	7		2	PC	WSHR, MICA INSUL TO-3 FIG 4	P						
	017	01	95596544	7		1	PC	RES FXD WW .81 OHM 1% 5WATT	P						
	018	01	95596503	3		1	PC	RES FXD WW 4.3 OHM 1% 5WATT	P						
	019	01	95637304	7		3	PC	DIO SIL 1N4004 400PIV 1.1V/1A	P						
	020	01	58018602	1		1	PC	XSTR 2N4901 POWER PNP SIL	P						
	021	01	51828014	4		1	PC	TERMINAL STRIP 4PIN P TYPE	B						

BUILD ARC 230

ASSEMBLY PARTS LIST

PRINT DATE 04-24-78 | PAGE 2 | FILE CHANGE NO. 00012827

DIV.	ASSEMBLY NUMBER	CD	REV.	DWG.	DESCRIPTION	MC	STATUS	STATUS DATE	ENG. RESP.	FILE DATE
0860	61407617 2		C	C	REGULATOR ASSY +15V	A	REL	10-19-76	CC6BIC	04-24-78

T	FIND NO	LI	PART NUMBER	CD	M	QUANTITY	U/M	PART DESCRIPTION	MC	YLD	ECO. NO. IN	ECO. NO. OUT	S/N	WK IN	WK OUT
	022	01	10127115	3		4	PC	MSCR PAN PHL 6-32X 5/8	B						
	023	01	10126401	8		5	PC	WSHR NO.6 EXT TOOTH LK TYP A	B						
	024	01	10127102	1		2	PC	MSCR PAN PHL 4-40X.250	B			12559			7804
	024	02	92745081	7		2	PC	MSCR PAN HD 4-40 7/32	B		12559			7804	
	025	01	10126400	0		2	PC	WSHR NO.4 EXT TOOTH LK TYP A	B						
	026	01	10125105	6		1	PC	NUT, HEX MSCR 6-32 STL CP/ZP	B						
	027	01	10127113	8		1	PC	MSCR PAN PHL 6-32X 3/8	B						
	028	01	62200812	6		REF	PC	SCH DIAG REGULATOR ASSY +15V	D						
	029	01	51785402	2		1	PC	FUSE BLOCK 125VAC 10A 3AG	P						
	030	01	24512922	6		1	PC	FUSE, TUBE 250V 1.5A FAST/ACT	P			12827			7829
	030	02	93418327	8		1	PC	FUSE 2 AMP 250V FAST	B		12827			7829	
	031	01	94277400	1		1	PC	STRAP CABLE TIE TYPE 1	B						
	032	01	95643212	4		2	PC	CONN QUICK 22-18 AWG FIG 2	P						
	033	01	24563704	6		100	FT	INS SLVNG HI TEMP 18AWG	B		12559			7804	
								0035 TOTAL LINES							

DWN	D. GARNER	10/1/76	CONTROL DATA	TITLE W/L REGULATOR ASSY (+15V)	PREFIX W/L	DOCUMENT NO. 61407618	REV. A
CHKD							
ENG							
MFG				FIRST USED ON CC681 C	NHA 61407617	SHEET 1 of 3	
APPR			CODE IDENT 15920				

SHEET REVISION STATUS

3	2	1
A	A	A

REVISION RECORD

REV	ECO	DESCRIPTION	DRFT	DATE	APP
A	10653-67	RELEASED CLASS A	/	10/9/76	A.C.T.

NOTES:
1. For find no. designations see parts list 61407617.
2. Reference designations are for ref only and may not appear on part.

DETACHED LISTS

AA3180 REV. 8/71

PRINTED IN U.S.A.

CONTROL DATA		CODE IDENT 15920	SHEET 2	W/L	DOCUMENT NO. 61407618	REV. A

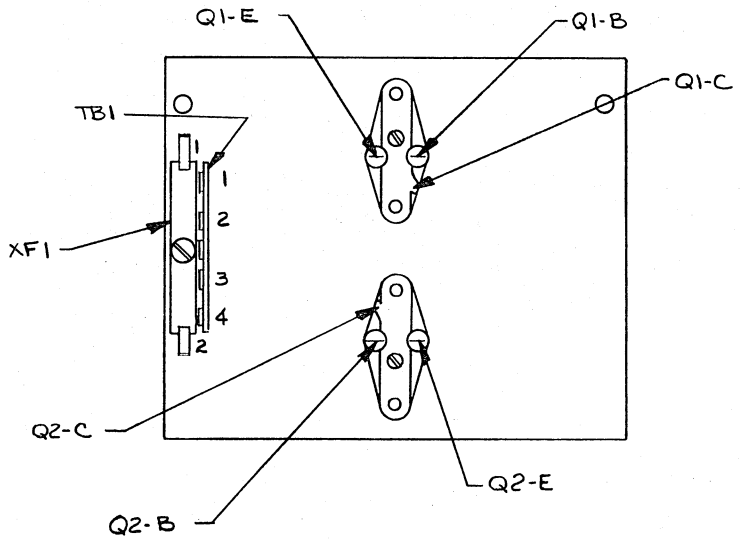

REFERENCE DESIGNATIONS
WIRING VIEW

AA3185

PRINTED IN U.S.A.

CONTROL DATA		CODE IDENT 15920 .	SHEET 3	WL	DOCUMENT NO. 61407618	REV. A

CONDUCTOR IDENT.	FIND NO.	GAUGE (REF.)	COLOR (REF.)	LENGTH (APPROX)	ORIGIN		ACCESS FIND NO.	DESTINATION		ACCESS FIND NO.	REMARKS
1	9	18	2	9.0	XF1	2		XV1	1	10,11	+20
2	13	22	-	2.0	Q1	B		Q2	B	12,13	JUMPER
3	9	18	2	4.0	Q1	C		BP5	1	14,15	+15
4	13	22	-	2.0	Q1	C		Q2	E	12.13	JUMPER
5	9	18	2	4.0	Q1	C		BP5	3	14,15	+15
6	8	18	0	4.0	Q2	C		BP5	2	14,15	GRD
7	8	18	0	11.0	Q2	C		XV1	2	10,11	GRD
8	13	22	-	0.5	TB1	1		TB1	2	13	JUMPER
9	9	18	2	2.5	XF1	1		TB1	1		

AA3183 REV. 8-71

PRINTED IN U.S.A.

SHEET REVISION STATUS	REVISION RECORD						
	REV	ECO	DESCRIPTION	DRFT	DATE	CHKD	APP
	A	10653-67	RELEASED CLASS A	/	10/19/76	/	R.G.T.
	B	CD11953	CHG LENGHT OF F/N 2	[illegible]	1-18-77	[illegible]	[illegible]

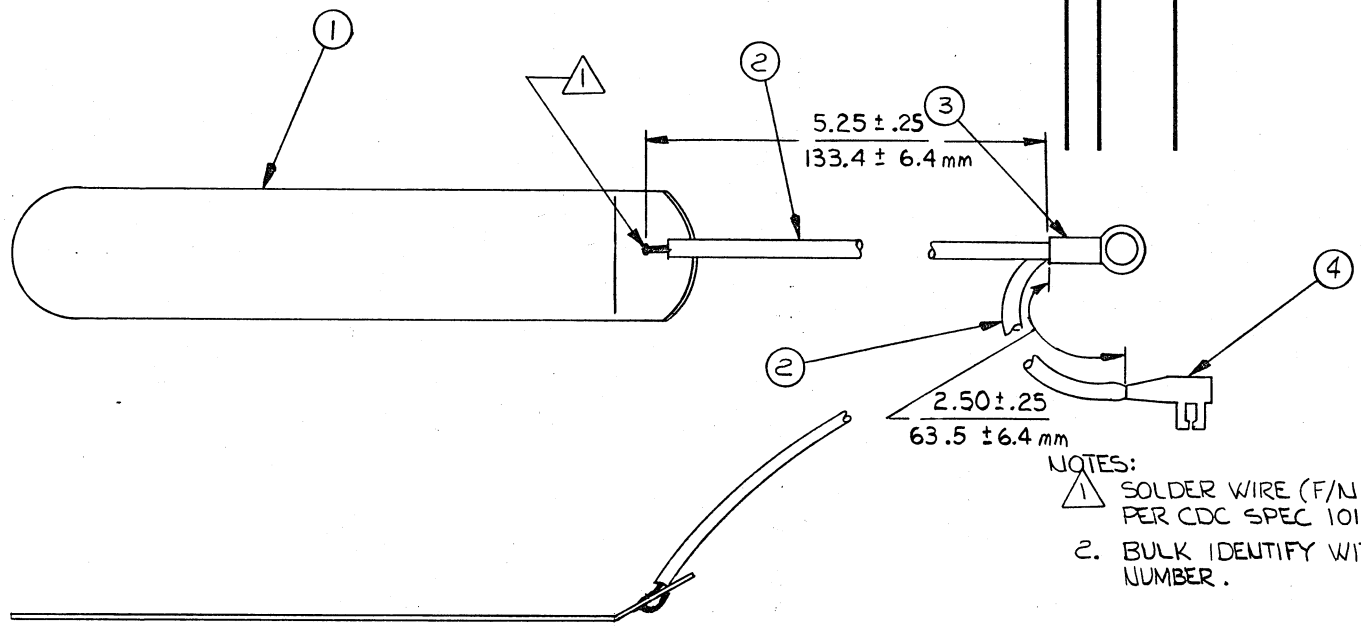

NOTES:

1. SOLDER WIRE (F/N 2) TO F/N 1 PER CDC SPEC 10120300.
2. BULK IDENTIFY WITH CDC PART NUMBER.

71492174

APL 71492174

DETACHED LISTS

UNLESS OTHERWISE SPECIFIED DIMENSIONS ARE IN INCHES/mm
TOLERANCES
3 PLACE ± / 2 PLACE ± / ANGLES ± /

DO NOT SCALE DRAWING

MATERIAL

FINISH

CONTROL DATA

FIRST USED ON	CC5B1A	
DWN	J. Garner	9/30/76
CHKD	E. Arms	10/6/76
ENGR	[illegible]	10/14/76
MFG	[illegible]	10/14/76
APPR	E. N. Noe	10-18-76

TITLE

CRT GROUND CLIP ASSY

CODE IDENT 15920 | C | DRAWING NO 71492174

SCALE 4/1 | NHA61370902 | SHEET 1 OF 1

BUILD ARC 104

ASSEMBLY PARTS LIST

PRINT DATE	PAGE	FILE CHANGE NO.
01-17-77	1	00011953

DIV.	ASSEMBLY NUMBER	CD	REV.	DWG.	DESCRIPTION	MC	STATUS	STATUS DATE	ENG. RESP.	FILE DATE
0860	71492174	9	B	A	GROUND CLIP CRT	A	REL	10-19-76	CC5B1A	01-17-77

T	FIND NO	LI	PART NUMBER	CD	M	QUANTITY	U/M	PART DESCRIPTION	MC	YLD	ECO. NO. IN	ECO. NO. OUT	S/N	WK IN	WK OUT
	001	01	71492216	8		1	PC	CLIP, CRT GROUND (COPPER)	P						
	002	01	93462555	9		750	FT	WIR 20GA STRD GRN 300V UL PVC	W						
	003	01	51797236	0		1	PC	LUG, CRMP R TERM 16-14GA 10SS	B						
	004	01	94219903	5		1	PC	CONTACT,FLAG 22-18AWG STRIP	P						
								0004 TOTAL LINES							

DWN	D. GARNER	12/11/75	CONTROL DATA	TITLE: CABLE ASS'Y-YOKE	PREFIX: A	DOCUMENT NO.: 61407418	REV: B
CHKD							
ENG		12-30-75					
MFG		12/30/75		FIRST USED ON: CC681 A&B	NHA: 61370900	SHEET: 1 of 2	
APPR		12-30-75	CODE IDENT: 15920				

SHEET REVISION STATUS

2	1
A	A
B	B

REVISION RECORD

REV	ECO	DESCRIPTION	DRFT	DATE	APP
A	10653-26	RELEASED CLASS A		12/31/75	M.C.T.
B	CD11413	REV SHT 2 PER ECO	MAD		

NOTES:

1. Bulk identify with CDC part number and revision letter.

PL 61407418
DETACHED LISTS

CONTROL DATA	CODE IDENT	SHEET		DOCUMENT NO.	REV.
	15920	2	A	61407418	B

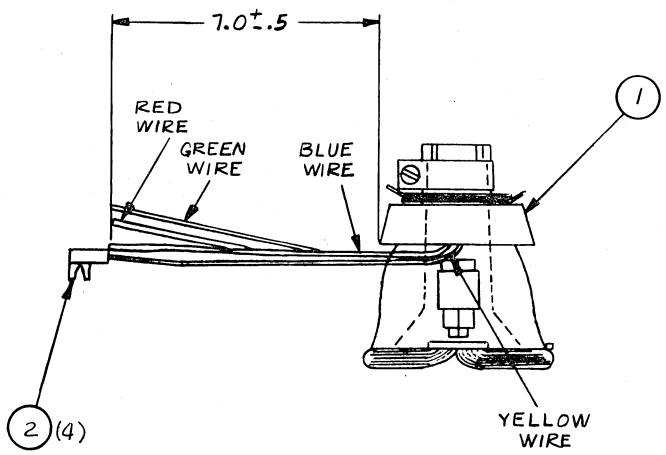

BUILD ARC 230

ASSEMBLY PARTS LIST

PRINT DATE	PAGE	FILE CHANGE NO.
03-15-76	1	00011413

DIV.	ASSEMBLY NUMBER	CD	REV.	DWG.	DESCRIPTION	MC	STATUS	STATUS DATE	ENG. RESP.	FILE DATE
0860	61667418	5	B	A	YOKE ASSY	A	REL	12-30-75	CC6B1A/B	03-15-76

T	FIND NO	LI	PART NUMBER	CD	M	QUANTITY	U/M	PART DESCRIPTION	MC	YLD	ECO. NO. IN	ECO. NO. OUT	S/N	WK IN	WK OUT
	001	01	51907000	7		1	PC	YOKE DEFL ASSY	P						
	002	01	94219903	5		4	PC	CONTACT,FLAG 22-18AWG STRIP	P						
								0002 TOTAL LINES							

DWN	R Trautman	7/76	CONTROL DATA	TITLE: CRT SOCKET ASSY	PREFIX: A	DOCUMENT NO.: 61407540	REV.: A
CHKD							
ENG		8/4/76					
MFG		8/4/76		FIRST USED ON: CC614D	NHA: 61370903	SHEET: 1 of 3	
APPR	E. N. Mee	8-6-76	CODE IDENT: 15920				

SHEET REVISION STATUS

3	2	1
A	A	A

REVISION RECORD

REV	ECO	DESCRIPTION	DRFT	DATE	APP
A	1065362	Released Class A	—	8/6/76	M.C.T.

NOTES:
1. Apply label to cable per drawing 82191061, method 6. Mark as shown.
2. Shown for refernce only and may not appear on part.
3. Bulk identify with CDC part number.
4. Length indicated is ± .5 and is measured from where lead exits the cap.

APL 61407540
DETACHED LISTS

AA3180 REV. 8.71 PRINTED IN U.S.A.

CONTROL DATA	CODE IDENT: 15920	SHEET: 2	A	DOCUMENT NO.: 61407540	REV.: A

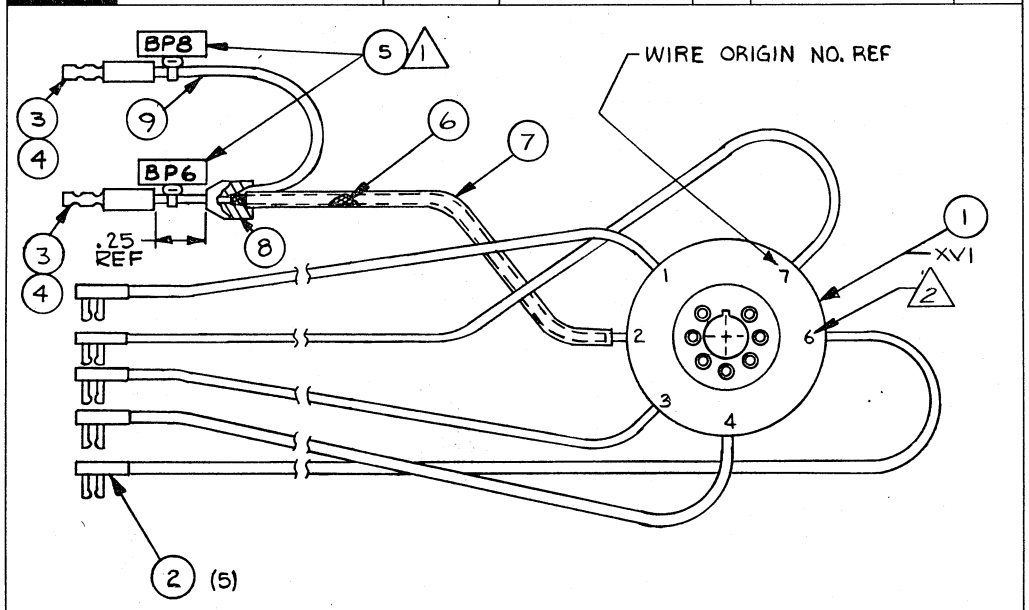

AA3185 PRINTED IN U.S.A.

CONTROL DATA		CODE IDENT 15920	SHEET 3	WL	DOCUMENT NO. 61407540	REV A

CONDUCTOR IDENT.	FIND NO.	GAUGE (REF.)	COLOR (REF.)	LENGTH (4)	ORIGIN		ACCESS FIND NO.	DESTINATION		ACCESS FIND NO.	REMARKS
1			3	6.0	XV1	7		BP4	1	2	
2			1	6.0	XV1	3		BP4	20	2	
3			2	5.5	XV1	6		BP4	4	2	
4			4	6.25	XV1	2		BP6		3,4	
5			5	2.5	Shield		8	BP8		3,4	Find No. 6 is not connected to XV1-2
6			5	7.5	XV1	1		BP4	2	2	
7			0	5.5	XV1	4		BP4	15	2	

AA3183 REV. 8-71 PRINTED IN U.S.A.

BUILD ARC 104

ASSEMBLY PARTS LIST

PRINT DATE 08-12-76 | PAGE 1 | FILE CHANGE NO. 10653-62

DIV.	ASSEMBLY NUMBER	CD	REV.	DWG.	DESCRIPTION	MC	STATUS	STATUS DATE	ENG. RESP.	FILE DATE
0860	61407540	6	A	A	CRT CAP ASSY	A	REL	08-06-76		08-12-76

T	FIND NO	LI	PART NUMBER	CD	M	QUANTITY	U/M	PART DESCRIPTION	MC	YLD	ECO. NO. IN	ECO. NO. OUT	S/N	WK IN	WK OUT
	001	01	51906700	3		1	PC	CRT SOCKET, 7 PIN MINIATURE	P						
	002	01	94219903	5		5	PC	CONTACT,FLAG 22-18AWG STRIP	P						
	003	01	51654700	7		2	PC	CONTACT RECPT ELEC 24-20 AWG	P						
	004	01	24534706	7		250	FT	INS SLEEVE 1/8 BLACK	B						
	005	01	94277409	2		2	PC	STRAP CABLE TIE TYPE 6	P						
	006	01	51828108	4		468	FT	SHIELDING CABLE BRAIDED 20A	W						
	007	01	24534707	5		468	FT	INS SLEEVE 3/16 BLACK	B						
	008	01	62022602	7		1	PC	FERRULE PRE-INSUL BROWN	P						
	009	01	93462555	9		208	FT	WIR 20GA STRD GRN 300V UL PVC	W						
								0009 TOTAL LINES							

DWN	Plantenberg	10-21-77	CONTROL DATA	TITLE: CRT SOCKET ASSY	PREFIX: A	DOCUMENT NO.: 61407857	REV.: B
CHKD							
ENG				FIRST USED ON: CC581	NHA: 61370905	SHEET: 1 of 3	
MFG							
APPR			CODE IDENT: 15920				

SHEET REVISION STATUS

3	2	1
A	A	A
B	B	B

REVISION RECORD

REV	ECO	DESCRIPTION	DRFT	DATE	APP
A	12490-4	RELEASED CLASS A	/	12-1-77	[illegible]
B	12916	REVISED PER ECO	WJG 5-3-78	5-7-78	MCE

NOTES:
1. Apply label to cable per drawing 8219106, method 6. Mark as shown.
2. Shown for reference only and may not appear on part.
3. Bulk identify with CDC part number.
4. Length indicated is ±.25 and is measured from where lead exits the cap.
5. Tolerances 2 plcs ±.12, 3.2mm

APL 61407857
DETACHED LISTS

AA3180 REV. 8 71 PRINTED IN U.S.A.

CONTROL DATA CORPORATION

CODE IDENT	SHEET		DOCUMENT NO	REV
15920	2	A	61407857	B

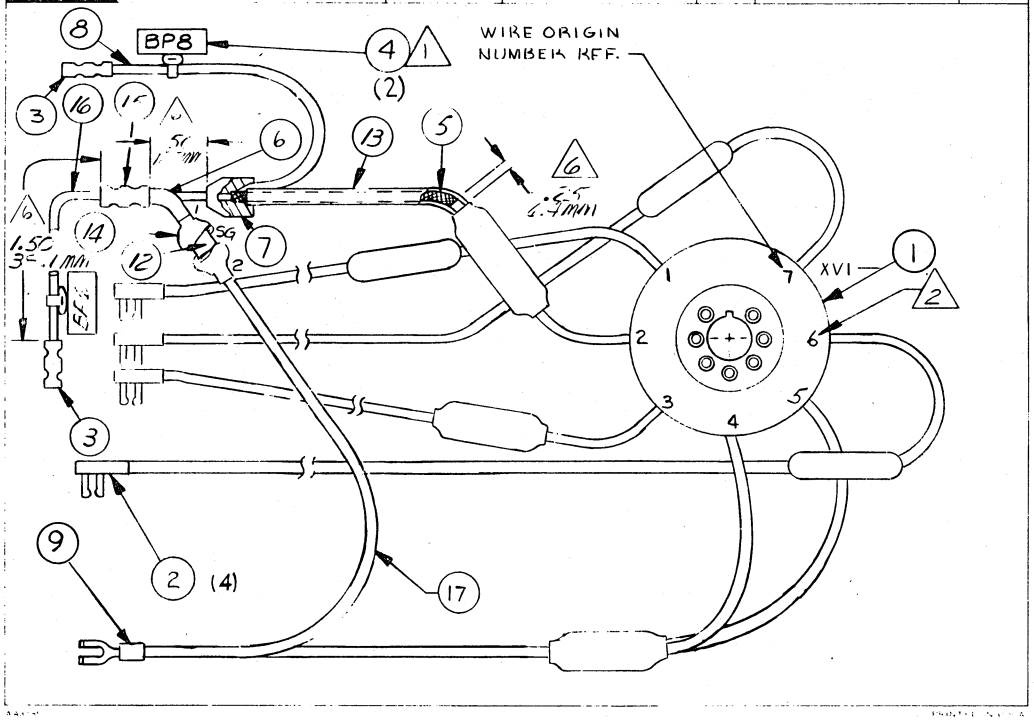

CONTROL DATA		CODE IDENT 15920	SHEET 3	WL	DOCUMENT NO. 61407857	REV. B

CONDUCTOR IDENT.	FIND NO.	GAUGE (REF.)	COLOR (REF.)	LENGTH (A)	ORIGIN		ACCESS FIND NO.	DESTINATION		ACCESS FIND NO.	REMARKS
1				6.0	XVI	7					
2				7.5	XVI	3					
3				5.5	XVI	6					
4				8.25	XVI	2					
5	8			2.5	SHIELD		7	BP	8	3	JUMPER
6	5			4.25	JUMPER		7				SHIELD
7				7.5	XVI	1					
8				8.25	XVI	4&5					
9	17			7.0	JUMPER		9	SPARK GAP	2		
10				0.5	SPARK GAP	1					

AA3183 REV. B 71 PRINTED IN U.S.A.

BUILD ARC 104

ASSEMBLY PARTS LIST

PRINT DATE	PAGE	FILE CHANGE NO.
05-01-78	1	00012916

DIV.	ASSEMBLY NUMBER	CD	REV.	DWG.	DESCRIPTION	MC	STATUS	STATUS DATE	ENG. RESP.	FILE DATE
0860	61407857	4	B	A	CRT SOCKET ASSY	A	REL	12-01-77	CC5B1	05-01-78

T	FIND NO	LI	PART NUMBER	CD	QUANTITY		U/M	PART DESCRIPTION	MC	YLD	ECO. NO. IN	ECO. NO. OUT	S/N	WK IN	WK OUT
	001	01	51906702	9	1		PC	SOCKET 7 PIN	P						
	002	01	94219903	5	4		PC	CONTACT,FLAG 22-18AWG STRIP	P						
	003	01	51654700	7	2		PC	CONT, RCPT 24-20GA GOLD FIG 1	P						
	004	01	94277409	2	2		PC	STRAP CABLE TIE TYPE 6	B						
	005	01	51828108	4		333	FT	CBL SHIELDING, CU BRAID 20A	W						
	006	01	24563704	6		032	FT	INS SLVNG HI TEMP 18AWG	B		12916			7819	
	007	01	62022602	7	1		PC	FERRULE PRE-INSUL BROWN	B						
	008	01	93462555	9		208	FT	WIR 20GA STRD GRN 300V UL PVC	W						
	009	01	51797110	7	1		PC	LUG TERM SLOT TONGUE 22X18	B			12916			7819
	009	02	51797117	2	1		PC	TERM LUG SLT CRMP 16-14 NO. 6	B		12916			7819	
	012	01	51780100	7	1		PC	SURGE VOLTAGE PROTECTOR 20AMP	P						
	013	01	24534707	5		354	FT	INS SLEEVE 3/16 BLACK	B						
	014	01	24534710	9		125	FT	INS SLEEVE 3/8 BLACK	B						
	015	01	93083033	6	1		PC	SPLICES ELECT 16-14 B1	P			12916			7819
	015	02	94858900	7	1		PC	SPLICES ELEC NYLON 16-22AWG	P		12916			7819	
	016	01	93462444	6		187	FT	WIR 20GA STRD YEL 300V UL PVC	W						
	017	01	93462000	6		583	FT	WIR 20GA STRD BLK 300V UL PVC	W		12916			7819	
								0017 TOTAL LINES							

DWN	R. Trautman	11-8-74	CONTROL DATA	TITLE	PREFIX	DOCUMENT NO.	REV.
CHKD	[illegible]	12/1/74		W/L VIDEO DISPLAY	WL	61378200	D
ENG	[illegible]	12/12/74					
MFG	[illegible]	5/12/75		FIRST USED ON	NHA	SHEET 1 of 3	
APPR	[illegible]	5/13/75	CODE IDENT 15920	CC614	61370900		

SHEET REVISION STATUS

REVISION RECORD

3	2	1	REV	ECO	DESCRIPTION	DRFT	DATE	APP
					RELEASED CLASS "C"		12-12-74	CDA
01		01	01	CD110	CHG WIRE LENGTHS ON COND IDENT 21-23	West 1-9-75	1-14-75	[illegible]
02	02	02	02	C146	REVISED PER ECO	RT 2-12-75	2/14/75	[illegible]
03	03	03	03	C227	ADDED REMARKS TO W/L	MP 4-2	4-7-75	[illegible]
04	04	04	04	C282	CHG'D WIRE LENGTHS	MP 5-6-75	5-6/75	[illegible]
05	05	05	05	C338	ADDED COND IDENT 27, 28	R 6-4-75	6/4/75	[illegible]
A	A	A	A	10653-8	RELEASED CLASS A	—	6/13/75	M.C.T.
B	B	B	B	CD 10996	WL CHG ONLY	JM 9/25/75	[illegible]	[illegible]
C	C	C	C	CD11000	WL CHG ONLY	MMD 11-13-75	[illegible]	[illegible]
D	D	D	D	CD11226	REVISED PER ECO	[illegible]	3/6/76	[illegible]
D	D	D	D	CD9401-24	ADD INT DIV LABEL 5722 AA	—	8/26/76	M.C.T.

INTER-DIVISIONAL DOCUMENT
This document is subject to change without prior notice. Users will receive copy only of the revised document.

AA3722

NOTES:
1. For Find Number Identification, See APL 61370900.

DETACHED LISTS

AA3180 REV. 8/71 PRINTED IN U.S.A.

CONTROL DATA		CODE IDENT 15920	SHEET 2	WL	DOCUMENT NO. 61378200	REV. D

CONDUCTOR IDENT.	FIND NO.	GAUGE (REF.)	COLOR (REF.)	LENGTH (APPROX)	ORIGIN		ACCESS FIND NO.	DESTINATION		ACCESS FIND NO.	REMARKS
1	13				XV1	7		BP4	1	—	
2	13				XV1	3		BP4	20	—	
3	13				XV1	6		BP4	4	—	
4	13				XV1	2		BP6	—	—	CONTACT POST
5	13				XV1	1		BP4	2	—	
6	13				XV1	4		BP4	15	—	FIL. GND
7	3				L2	1		BP4	7	—	VERT PEAKING COIL
8	3				L2	2		BP4	6	—	VERT PEAKING COIL
9	12				L1	GRN		BP4	9	—	VERT YOKE
10	12				L1	YEL		BP4	10	—	VERT YOKE
11	22	—	—	—		—	—	—	—	—	—
12	22	—	—	—	—	—	—	—	—	—	—
13	11	—	—	—	T1	5		BP4	13	—	-190V TAP
14	11	—	—	—	T1	7		BP4	14	—	HV GND
—	—	—	—	—	—	—	—	—	—	—	—
15	11	—	—	—	T1	1		BP4	16	—	+465V TAP
16	11	—	—	—	T1	3		BP4	17	—	PRIMARY, FLYBACK
17	11	—	—	—	—	—		—	—		PRIMARY, GND FLYBACK
18	12				L1	RED		BP4	18	—	HORZ YOKE
19	12				L1	BLU		BP4	19	—	HORZ YOKE

AA3183 REV. 8-70 PRINTED IN U.S.A.

CONTROL DATA		CODE IDENT 15920	SHEET 3	WL	DOCUMENT NO. 61378200	REV. D

CONDUCTOR IDENT	FIND NO.	GAUGE (REF.)	COLOR (REF.)	LENGTH (APPROX)	ORIGIN		ACCESS FIND NO.	DESTINATION		ACCESS FIND NO.	REMARKS
20	11				T1	6		BP4	5		
21	37				BJ7	CONTACT POST		ARC GND			Use L2 mounting screw see 61370900 dwg.

AA3183 REV. 8-70

PRINTED IN U.S.A.

DWN	M. Plantenberg	11-17-77	CONTROL DATA
CHKD	[illegible]	12-1-77	
ENG	[illegible]	12-4-77	
MFG	[illegible]	12-9-77	
APPR	[illegible]	12-13-77	CODE IDENT 15920

TITLE: WIRE LIST- VIDEO DISPLAY

FIRST USED ON: CC614A

PREFIX	DOCUMENT NO.	REV.
WL	61407979	B

NHA 61407969 | SHEET 1 of 2

SHEET REVISION STATUS

2	1
A	A
B	B

REVISION RECORD

REV	ECO	DESCRIPTION	DRFT	DATE	APP
A	12450-7	RELEASED CLASS A	/	12-13-77	MCX
B	12854	REVISED PER ECO	E.E.	4-20-78	[illegible]

NOTES:
1. For Find Number Identification, see APL 61407969.

DETACHED LISTS

AA3180 REV. B 71

PRINTED IN U.S.A.

CONTROL DATA | CODE IDENT 15920 | SHEET 2 | WL | DOCUMENT NO. 61407979 | REV B

CONDUCTOR IDENT.	FIND NO.	GAUGE (REF.)	COLOR (REF.)	LENGTH (APPROX)	ORIGIN		ACCESS FIND NO.	DESTINATION		ACCESS FIND NO.	REMARKS
1	13				XV1	7		BP4	1	22	
2	13				XV1	3		BP4	20	22	
3	13				XV1	6		BP4	4	22	
4	13				XV1	2		BP6		4	CONTACT POST
5	13				XV1	2 Shield		BP8		4	CONTACT POST
6	13				XV1	1		BP4	2	22	
7	13				XV1	4	}				
8	13				XV1	5	}	ARC GND			USE L2 MOUNTING SCREW. SEE 61407969 DWG.
9	3				L2	1		BP4	7	22	VERT PEAKING COIL
10	3				L2	2		BP4	6	22	VERT PEAKING COIL
11	12				L1	GRN		BP4	9	22	VERT YOKE
12	12				L1	YEL		BP4	10	22	VERT YOKE
13	12				L1	RED		BP4	18	22	HORZ YOKE
14	12				L1	BLU		BP4	19	22	HORZ YOKE
15	11				T1	5		BP4	13	22	+45V TAP
16	11				T1	7		BP4	14	22	HV GND
17	11				T1	6		BP4	5	22	-190V TAP
18	11				T1	1		BP4	16	22	+465V TAP
19	11				T1	3		BP4	17	22	PRIMARY, FLYBACK
20	37				BJ7	CONTACT POST	4	ARC GND			USE L2 MOUNTING SCREW. SEE 61407969 DWG.

AA3183 REV. 8/71

PRINTED IN U.S.A.

DWN	D. Wells	12/12/75	CONTROL DATA	TITLE	PREFIX	DOCUMENT NO.	REV.
CHKD	[illegible]	12/15		CHOKE ASSY	A	61407419	A
ENG	[illegible]	12-19-75					
MFG	[illegible]	12/26/75		FIRST USED ON	NHA	SHEET 1 of 2	
APPR	[illegible]	12-30-75	CODE IDENT 15920	CC681A,B	61370900		

SHEET REVISION STATUS

2	1
A	A

REVISION RECORD

REV	ECO	DESCRIPTION	DRFT	DATE	APP
A	10653-26	RELEASED CLASS A	/	12/31/75	M.C.T.

NOTES:

1. Bulk identify with CDC part number and revision letter.

APL 61407419

DETACHED LISTS

AA3180 REV. 8/71

PRINTED IN U.S.A.

CONTROL DATA		CODE IDENT	SHEET		DOCUMENT NO.	REV.
		15920	2	A	61407419	A

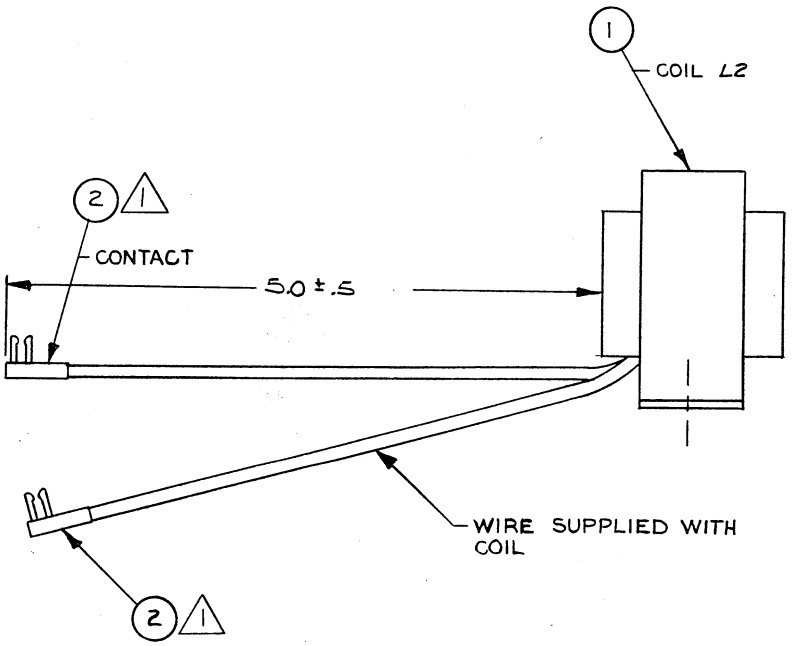

AA3185

PRINTED IN U.S.A.

BUILD ARC 230

ASSEMBLY PARTS LIST

PRINT DATE	PAGE	FILE CHANGE NO.
12-30-75	1	10653-26

DIV.	ASSEMBLY NUMBER	CD	REV.	DWG.	DESCRIPTION	MC	STATUS	STATUS DATE	ENG. RESP.	FILE DATE
0860	61407419	3	A	A	CHOKE ASSY	A	REL	12-10-75	CC6B1A/B	12-30-75

T	FIND NO	LI	PART NUMBER	CD	M	QUANTITY		U/M	PART DESCRIPTION	MC	YLD	ECO. NO. IN	ECO. NO. OUT	S/N	WK IN	WK OUT
	001	01	51906800	1		1		PC	COIL 320 MILLIHENRY	P						
	002	01	94219903	5		2		PC	CONTACT,FLAG 22-18AWG STRIP	P						
									0002 TOTAL LINES							

DWN	D Garner	12/7	CONTROL DATA	TITLE: High Voltage Transformer Assy	PREFIX: A	DOCUMENT NO.: 61407417	REV.: C
CHKD	E Grono	12/75					
ENG	D W Pearson	12/75					
MFG	L J Link	12/75		FIRST USED ON: CC6B1A/B	NHA: 61370900	SHEET 1 of 5	
APPR	E N Noe	12/75	CODE IDENT: 15920				

SHEET REVISION STATUS

5	4	3	2	1
	B	B	B	B
C	C	C	B	C

REVISION RECORD

REV	ECO	DESCRIPTION	DRFT	DATE	APP
B	CD 11381	Retyped sht 1, last ECO 10653-26, Revised per ECO	Rp	2/10/76	Rp.
C	CD 11467	ADDED ALT CONST.	D	4/16/76 DN	KK

NOTES:
1. Shown for reference only and may not appear on part.
2. Slip 1.0 inch of .375 dia tubing, F/N 6, over each end of the soldered resistor-diode junctions. At each end the tubing should extend up to the resistor body and over the wire insulation. Shrink tubing. Next slip 3 inches of .50 dia tubing, F/N 4 over resistor-diode and center over this assembly. Shrink tubing.

APL 61407417
DETACHED LISTS

AA3180 REV. 8-71 PRINTED IN U.S.A.

CONTROL DATA	CODE IDENT: 15920	SHEET 2	A	DOCUMENT NO.: 61407417	REV.: B

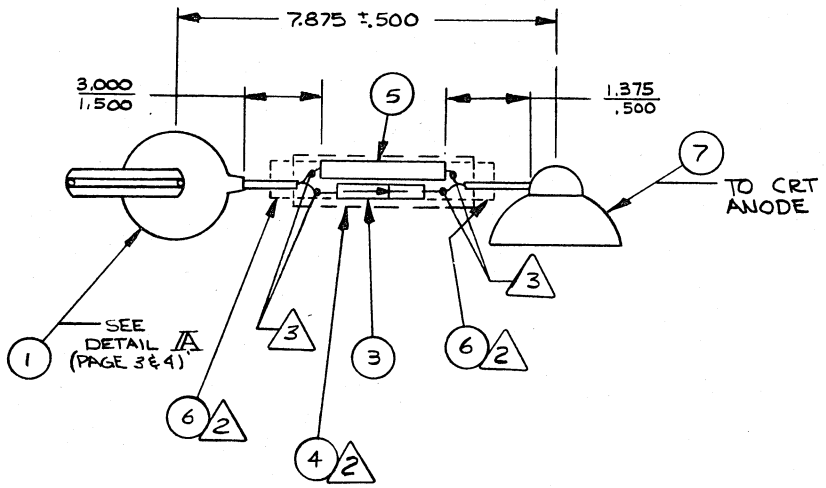

3. Leads to be soldered so that no sharp points are visible.
4. Bulk identify with CDC part number and revision letter.

AA3185 PRINTED IN U.S.A.

CONTROL DATA		CODE IDENT 15920	SHEET 3	A	DOCUMENT NO. 61407417	REV. C

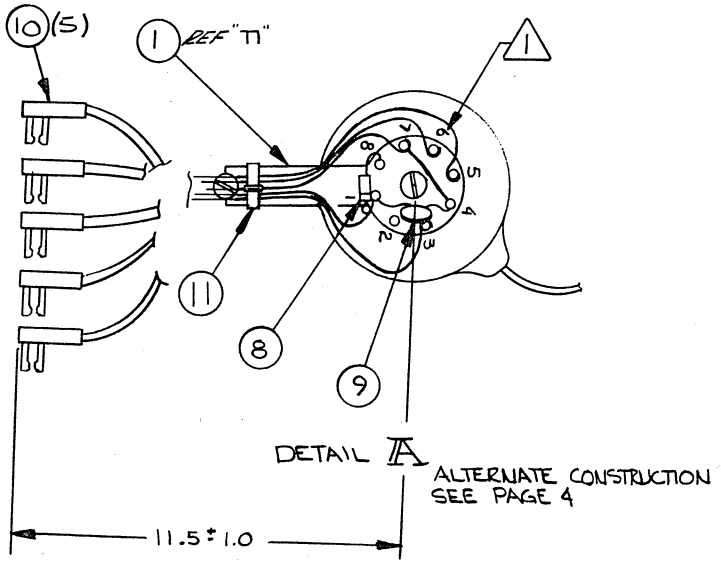

AA3185

PRINTED IN U.S.A.

CONTROL DATA		CODE IDENT 15920	SHEET 4	A	DOCUMENT NO. 61407417	REV. C

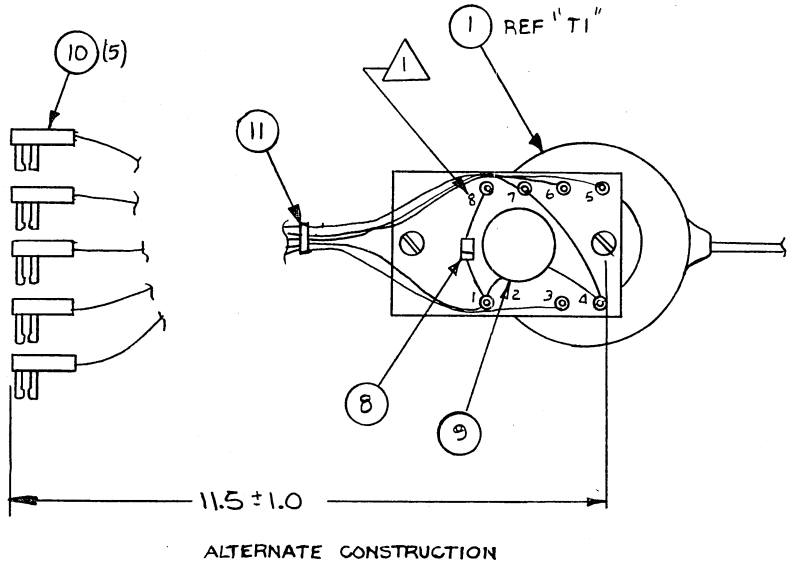

ALTERNATE CONSTRUCTION

AA3185

PRINTED IN U.S.A.

CONTROL DATA		CODE IDENT 15920	SHEET 5	WL	DOCUMENT NO. 61407417	REV. C

CONDUCTOR IDENT.	FIND NO.	GAUGE (REF.)	COLOR (REF.)	LENGTH (APPROX)	ORIGIN		ACCESS FIND NO.	DESTINATION		ACCESS FIND NO.	REMARKS
1	2	20	3	11.5	T1	5		BP4	13	10	-190V Tab
2	2	20	3	11.5	T1	7		BP4	14	10	H.V. Tab
3	2	20	3	11.5	T1	1		BP4	16	10	+465 Tab
4	2	20	3	11.5	T1	3		BP4	17	10	Primary, Flyback
5	2	20	3	3.0	T1	4		T1	7		Primary Gnd, Flyback
6	2	20	3	11.5	T1	6		BP4	5	10	
7					T1	8		T1	1		Diode, 1N4005
8					T1	1		T1	4		Cap. .02

AA3183 REV. 8/71

PRINTED IN U.S.A.

BUILD ARC 230

ASSEMBLY PARTS LIST

PRINT DATE	PAGE	FILE CHANGE NO.
04-07-76	1	00011467

DIV.	ASSEMBLY NUMBER	CD	REV.	DWG.	DESCRIPTION	MC	STATUS	STATUS DATE	ENG. RESP.	FILE DATE
0860	61407417	7	C	A	HIGH VOLTAGE TRANSFORMER ASSY	A	REL	12-30-75	CC6B1A/B	04-07-76

T	FIND NO	LI	PART NUMBER	CD	M	QUANTITY	U/M	PART DESCRIPTION	MC	YLD	ECO. NO. IN	ECO. NO. OUT	S/N	WK IN	WK OUT
	001	01	51908300	0		1	PC	TRANSFORMER FLYBACK	P						
	002	01	93505333	0		4 666	FT	WIRE 20GA STRD ORANGE 600V UL	W						
	003	01	51909001	3		1	PC	RECT HI VOLT RE4 18KV FOR 40V	P						
	004	01	24534712	5		300	FT	INS SLEEVE 1/2 BLACK	B						
	005	01	51500283	0		1	PC	RES FXD FILM 250 MEG 2W 5P	P						
	006	01	24534710	9		250	FT	INS SLEEVE 3/8 BLACK	B						
	007	01	51752300	7		1	PC	LEAD ELEC ANODE 40 KV DC	W						
	008	01	95637305	4		1	PC	DIO SIL 1N4005 600PIV 1.1V/1A	P						
	009	01	94842184	7		1	PC	CAP FXD CER 0.02UF 1KV	P						
	010	01	94219903	5		5	PC	CONTACT,FLAG 22-18AWG STRIP	P						
	011	01	94277400	1		1	PC	STRAP CABLE TIE TYPE 1	P						
								0011 TOTAL LINES							

DWN	R Trautman	2-22-77	CONTROL DATA	TITLE	PREFIX	DOCUMENT NO.	REV
CHKD				HIGH VOLTAGE TRANSFORMER ASSY	A	61407695	A
ENG				FIRST USED ON	NHA	SHEET	
MFG			CODE IDENT	CC6B1A/B	61370900	1 of 5	
APPR	E. M. Nee	2-24-77	15920				

SHEET REVISION STATUS

5	4	3	2	1
A	A	A	A	A

REVISION RECORD

REV	ECO	DESCRIPTION	DRFT	DATE	APP
A	10653-82	RELEASED CLASS "A"	/	2-28-77	[illegible]

NOTES:
1. Shown for reference only and may not appear on part.
2. Slip 1.0 inch of .375 tubing, F/N 6, over each end of the soldered resistor-diode junctions. At each end the tubing should extend up to the resistor body and over the wire insulation. Shrink tubing. Next slip 3 inches of .50 dia tubing, F/N 4, over resistor-diode and center over this assembly. Shrink tubing.

APL 61407695
DETACHED LISTS

AA3180 REV. 8-71

PRINTED IN U.S.A.

CONTROL DATA		CODE IDENT	SHEET		DOCUMENT NO.	REV.
		15920	2	A	61407695	A

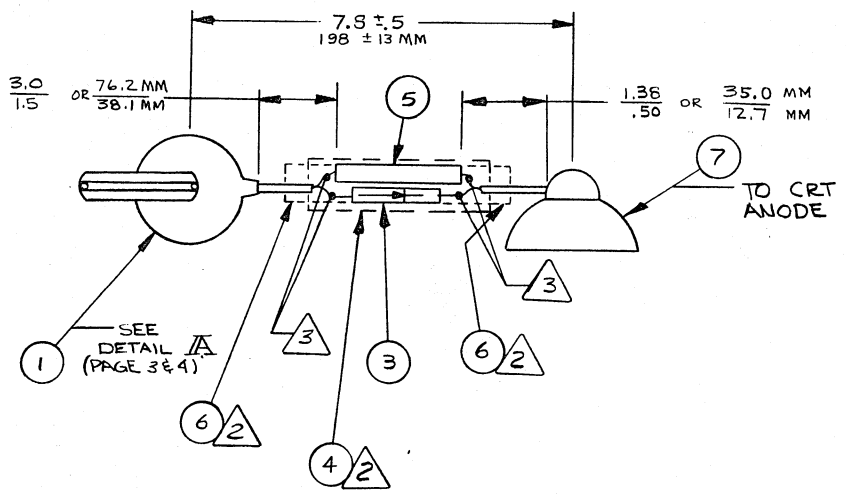

3. Leads to be soldered so that no sharp points are visible.
4. Bulk identify with CDC part number.

AA3185

PRINTED IN U.S.A.

CONTROL DATA		CODE IDENT 15920	SHEET 3	A	DOCUMENT NO. 61407695	REV. A

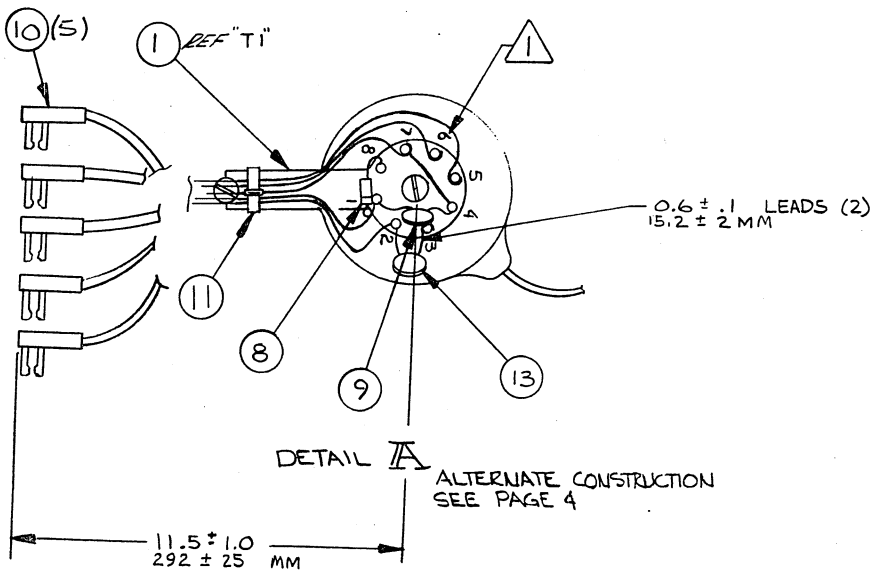

AA3185

PRINTED IN U.S.A.

CONTROL DATA		CODE IDENT 15920	SHEET 4	A	DOCUMENT NO. 61407695	REV. A

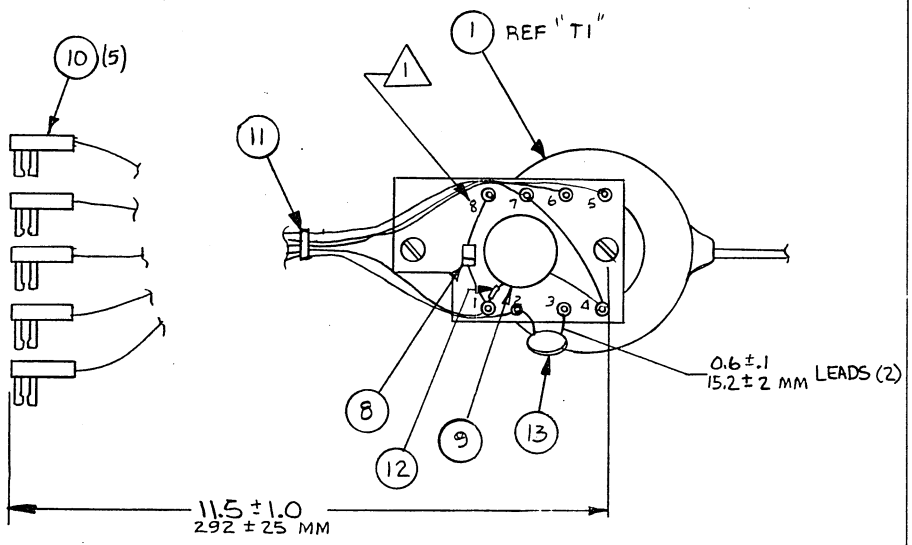

ALTERNATE CONSTRUCTION

AA3185

PRINTED IN U.S.A.

CONTROL DATA					CODE IDENT 15920	SHEET 5		WL	DOCUMENT NO. 61407695		REV. A
CONDUCTOR IDENT.	FIND NO.	GAUGE (REF.)	COLOR (REF.)	LENGTH (APPROX)	ORIGIN		ACCESS FIND NO.	DESTINATION		ACCESS FIND NO.	REMARKS
1	2	20	3	11.5	T1	5		BP4	13	10	-190V Tab
2	2	20	3	11.5	T1	7		BP4	14	10	H.V. Tab
3	2	20	3	11.5	T1	1		BP4	16	10	+465 Tab
4	2	20	3	11.5	T1	2		BP4	17	10	Primary, Flyback
5	2	20	3	3.0	T1	4		T1	7		Primary Gnd, Flyback
6	2	20	3	11.5	T1	6		BP4	5	10	
7					T1	8		T1	1		Diode, 1N4005
8					T1	1		T1	4		Cap. .02
9					T1	2		T1	3		Thermistor, Disc

AA3183 REV. 8/71 PRINTED IN U.S.A.

BUILD ARC 230

ASSEMBLY PARTS LIST

PRINT DATE	PAGE	FILE CHANGE NO.
03-02-77	1	10653-82

DIV.	ASSEMBLY NUMBER	CD	REV.	DWG.	DESCRIPTION	ASC	STATUS	STATUS DATE	ENG. RESP.	FILE DATE
0860	61407695	8	8	4	HIGH VOLTAGE TRANSFORMER ASSY	A	REL	02-28-77	CC6B1A/B	03-02-77

T	FIND NO	LI	PART NUMBER	CD	M	QUANTITY	U/M	PART DESCRIPTION	MC	YLD	ECO. NO. IN	ECO. NO. OUT	S/N	WK IN	WK OUT
	001	01	51908300	0		1	PC	TRANSFORMER FLYBACK	P						
	002	01	93505333	0		4 666	FT	WIR 20GA STRD ORN 600V UL PVC	W						
	003	01	51909001	3		1	PC	RECT HI VOLT RE4 1RKV FOR 40V	P						
	004	01	24534712	5		300	FT	INS SLEEVE 1/2 BLACK	B						
	005	01	51500283	0		1	PC	RES FXD FILM 250 MEG 2W 5P	P						
	006	01	24534710	9		250	FT	INS SLEEVE 3/8 BLACK	B						
	007	01	51752300	7		1	PC	LEAD ELEC ANODE 40 KV DC	W						
	008	01	95637305	4		1	PC	DIO SIL 1N4005 600PIV 1.1V/1A	P						
	009	01	94842184	7		1	PC	CAP FXD CER 0.02UF 1KV	P						
	010	01	94219903	5		5	PC	CONTACT,FLAG 22-18AWG STRIP	P						
	011	01	94277400	1		1	PC	STRAP CABLE TIE TYPE 1	B						
	012	01	51797420	0		050	FT	TBG, INS .034DIA T/W NAT TEF	B						
	013	01	51908602	9		1	PC	THMS, DISC 2.5 OHM 10P 14WW	P						
								0013 TOTAL LINES							

DWN	R Trautman /	3/7/8	CONTROL DATA	TITLE	PREFIX	DOCUMENT NO.	REV.
CHKD	R. Trautman	3/7/8		HIGH VOLTAGE TRANSFORMER ASSEMBLY	A	61408075	B
ENG	A. Olson	3-9-78					
MFG	T.R. Peterson	3-9-78		FIRST USED ON	NHA	SHEET	
APPR	E. M. Roe	3-10-78	CODE IDENT 15920	CC617A/B/C	61407659	1 of 5	

SHEET REVISION STATUS

5	4	3	2	1
A	A	A	A	A
A	A	A	B	B

REVISION RECORD

REV	ECO	DESCRIPTION	DRFT	DATE	APP
A	12402-37	Released Class A	/	3-13-78	mcf
B	13037	REVISED PER ECO	WJG	8-18-78	

NOTES:
1. Shown for reference only and may not appear on part.
2. Slip 1.0 inch of .375 tubing, F/N 6, over each end of the soldered resistor-diode junctions. At each end the tubing should extend up to the resistor body and over the wire insulation. Shrink tubing. Next slip 3 inches of .50 dia tubing, F/N 4, over resistor-diode and center over this assembly. Shrink tubing

APL 61408075
DETACHED LISTS

AA3180 REV. 8/71 PRINTED IN U.S.A.

CONTROL DATA		CODE IDENT	SHEET		DOCUMENT NO.	REV.
		15920	2	A	61408075	B

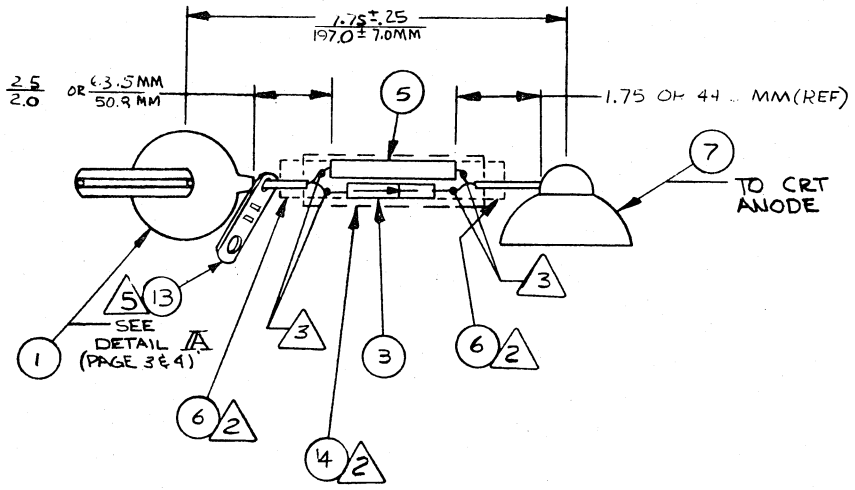

3. Leads to be soldered so that no sharp points are visible.
4. Bulk identify with CDC part number.
5. Flat side of F/N 13 to be toward transformer.

AA3185 PRINTED IN U.S.A.

CONTROL DATA		CODE IDENT 15920	SHEET 3	A	DOCUMENT NO. 61408075	REV. A

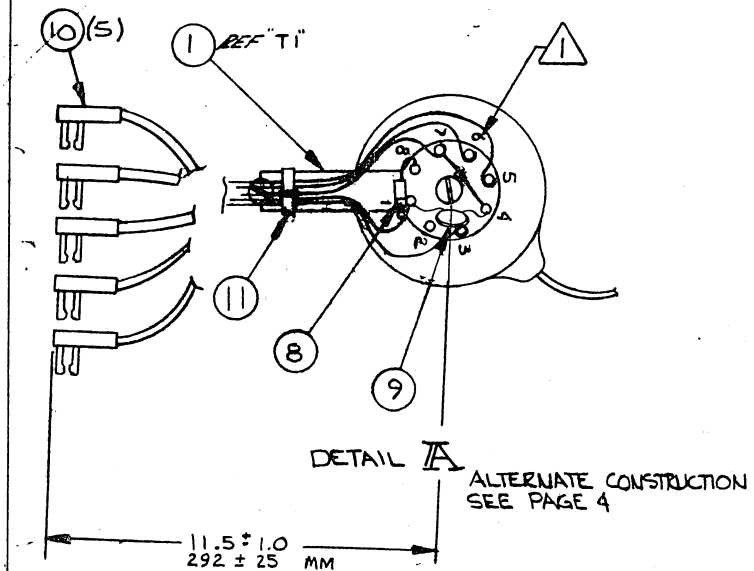

AA3185

PRINTED IN U.S.A.

CONTROL DATA		CODE IDENT 15920	SHEET 4	A	DOCUMENT NO. 61408075	REV. A

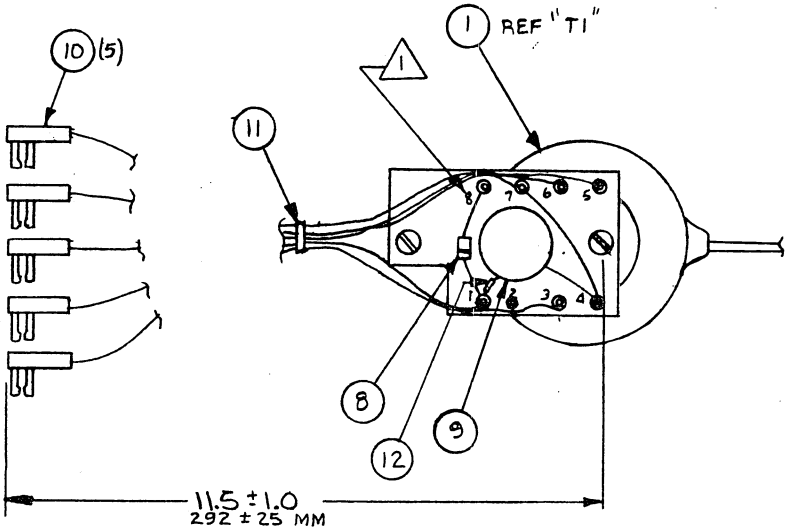

ALTERNATE CONSTRUCTION

AA3185

PRINTED IN U.S.A.

CONTROL DATA		CODE IDENT	SHEET	WL	DOCUMENT NO.	REV.
		15290	5		61408075	A

CONDUCTOR IDENT.	FIND NO.	GAUGE (REF.)	COLOR (REF.)	LENGTH (APPROX)	ORIGIN		ACCESS FIND NO.	DESTINATION		ACCESS FIND NO.	REMARKS
1	2	20	3	11.5	T1	5		BP4	13	10	-190V Tab
2	2	20	3	11.5	T1	7		BP4	14	10	H.V. Tab
3	2	20	3	11.5	T1	1		BP4	16	10	+465 Tab
4	2	20	3	11.5	T1	3		BP4	17	10	Primary Flyback
5	2	20	3	3.0	T1	4		T1	7		Primary Gnd, Flyback
6	2	20	3	11.5	T1	6		BP4	5	10	
7					T1	8		T1	1		Diode, 1N4005
8					T1	1		T1	4		Cap .02UF

AA3183 REV. 8/71 PRINTED IN U.S.A.

BUILD ARC 230

ASSEMBLY PARTS LIST

PRINT DATE	PAGE	FILE CHANGE NO.
08-14-78	1	00013037

DIV.	ASSEMBLY NUMBER	CD	REV.	DWG.	DESCRIPTION	MC	STATUS	STATUS DATE	ENG. RESP.	FILE DATE
0860	61408075	2	B	A	HIGH VOLTAGE TRANSFORMER ASSY	A	REL	03-13-78		08-10-78

T	FIND NO	LI	PART NUMBER	CD	M	QUANTITY	U/M	PART DESCRIPTION	MC	YLD	ECO. NO. IN	ECO. NO. OUT	S/N	WK IN	WK OUT
	001	01	51908300	0		1	PC	TRANSFORMER FLYBACK	P						
	002	01	93505333	0		4 666	FT	WIR 20GA STRD ORN 600V UL PVC	W						
	003	01	51909001	3		1	PC	RECT HI VOLT RE4 18KV FOR 40V	P						
	004	01	24534712	5		300	FT	INS SLEEVE 1/2 BLACK	B						
	005	01	51500283	0		1	PC	RES FXD FILM 250 MEG 2W 5P	P						
	006	01	24534710	9		250	FT	INS SLEEVE 3/8 BLACK	B						
	007	01	51752300	7		1	PC	LEAD ELEC ANODE 40 KV DC	W						
	008	01	95637305	4		1	PC	DIO SIL 1N4005 600PIV 1.1V/1A	P						
	009	01	94842184	7		1	PC	CAP FXD CER .02UF +80/-20P 1K	P						
	010	01	94219903	5		5	PC	CONTACT,FLAG 22-18AWG STRIP	P						
	011	01	94277400	1		1	PC	STRAP CABLE TIE TYPE 1	B						
	012	01	51797420	0		050	FT	TBG, INS .034DIA T/W NAT TEF	B						
	013	01	51918727	2		1	PC	TIE PLATE NYLON STRAP HOLDER	P		13037			7832	
								0013 TOTAL LINES							

DWN	D. Wells	12/12/75	CONTROL DATA	TITLE	PREFIX	DOCUMENT NO.	REV.
CHKD	E. Arono	12/17/75		CABLE ASSY VIDEO DISPLAY	A	61407420	A
ENG	[illegible]	12-18/75					
MFG	[illegible]	12/30/75		FIRST USED ON	NHA		
APPR	E. N. Noe	12-30-75	CODE IDENT 15920	CC6B1A,B	61370900	SHEET 1 of 3	

SHEET REVISION STATUS

3	2	1
A	A	A

REVISION RECORD

REV	ECO	DESCRIPTION	DRFT	DATE	APP
A	10653-26	RELEASED CLASS A	/	12/31/75	M.C.T.

NOTES:

1. Apply label to cable per drawing 82191061, Method 6. Mark as shown.
2. Bulk identify with CDC part number and revision letter.

APL 61407420

DETACHED LISTS

AA3180 REV. 8/71

PRINTED IN U.S.A.

CONTROL DATA	CODE IDENT	SHEET		DOCUMENT NO.	REV.
	15920	2	A	61407420	A

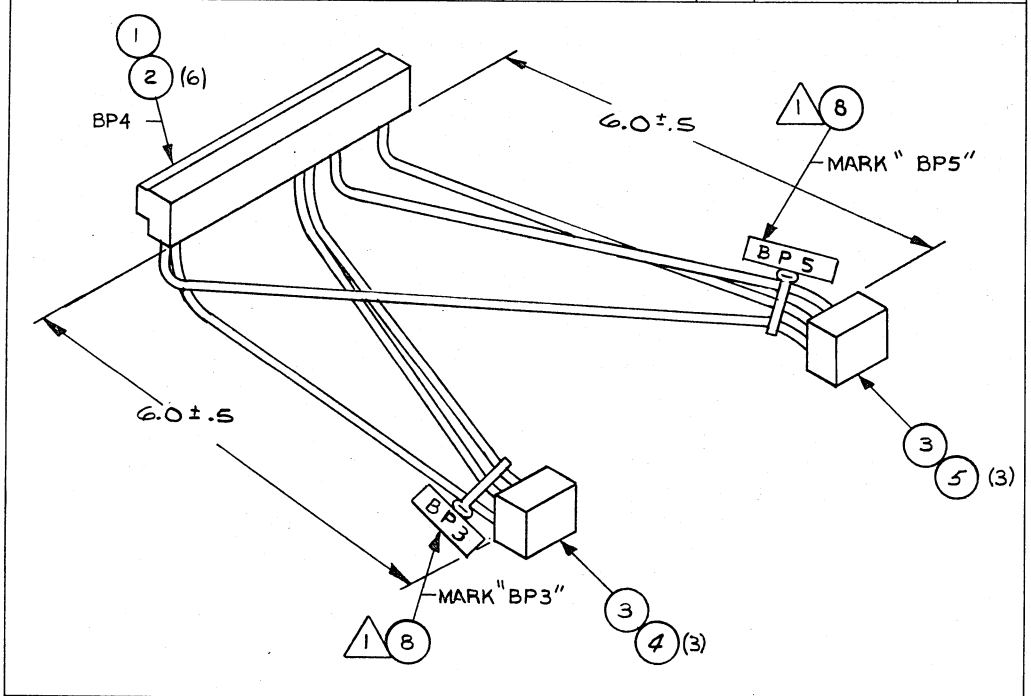

AA3185

PRINTED IN U.S.A.

CONTROL DATA		CODE IDENT 15920	SHEET 3	A	DOCUMENT NO. 61407420	REV. A

CONDUCTOR IDENT.	FIND NO.	GAUGE (REF.)	COLOR (REF.)	LENGTH (APPROX)	ORIGIN		ACCESS FIND NO	DESTINATION		ACCESS FIND NO.	REMARKS
1	6	18	RED	6.5	BP5	1	5	BP4	8	2	
2	6	18	RED	9	BP5	3	5	BP4	22	2	
3	9	18	BLK	6	BP5	2	5	BP4	3	2	
4	7	20	YEL	6.5	BP3	2	4	BP4	12	2	
5	7	20	YEL	6.5	BP3	1	4	BP4	11	2	
6	7	20	YEL	8.5	BP3	3	4	BP4	21	2	

AA3183 REV. 8-71

PRINTED IN U.S.A

BUILD ARC 230

ASSEMBLY PARTS LIST

PRINT DATE	PAGE	FILE CHANGE NO.
12-30-75	1	10653-26

DIV.	ASSEMBLY NUMBER	CD	REV.	DWG.	DESCRIPTION	MC	STATUS	STATUS DATE	ENG. RESP.	FILE DATE
0860	61407420	1	A	A	CABLE ASSY VIDEO DISPLAY	A	REL	12-30-75	CC6B1A/B	12-30-75

T	FIND NO	LI	PART NUMBER	CD	M	QUANTITY	U/M	PART DESCRIPTION	MC	YLD	ECO. NO. IN	ECO. NO. OUT	S/N	WK IN	WK OUT
	001	01	51652907	0		1	PC	CONN PRNTD CKT EDGE 22 POS	P						
	002	01	94219903	5		6	PC	CONTACT,FLAG 22-18AWG STRIP	P						
	003	01	51906001	6		2	PC	CONN PLUG 3 PIN	P						
	004	01	51905800	2		3	PC	CONTACT PIN 20-14 STRIP	P						
	005	01	51905804	4		3	PC	CONTACT PIN 20-14 STRIP	P						
	006	01	93463222	5		1 291	FT	WIR 18GA STRD RED 300V UL PVC	W						
	007	01	93462444	6		1 791	FT	WIR 20GA STRD YEL 300V UL PVC	W						
	008	01	94277409	2		2	PC	STRAP CABLE TIE TYPE 6	P						
	009	01	93463000	5		500	FT	WIR 18GA STRD BLK 300V UL PVC	W						
								0009 TOTAL LINES							

SHEET REVISION STATUS	REVISION RECORD						
	REV	ECO	DESCRIPTION	DRFT	DATE	CHKD	APP
	A	10989-60	RELEASED CLASS A	/	10/28/76	/	M.C.T.

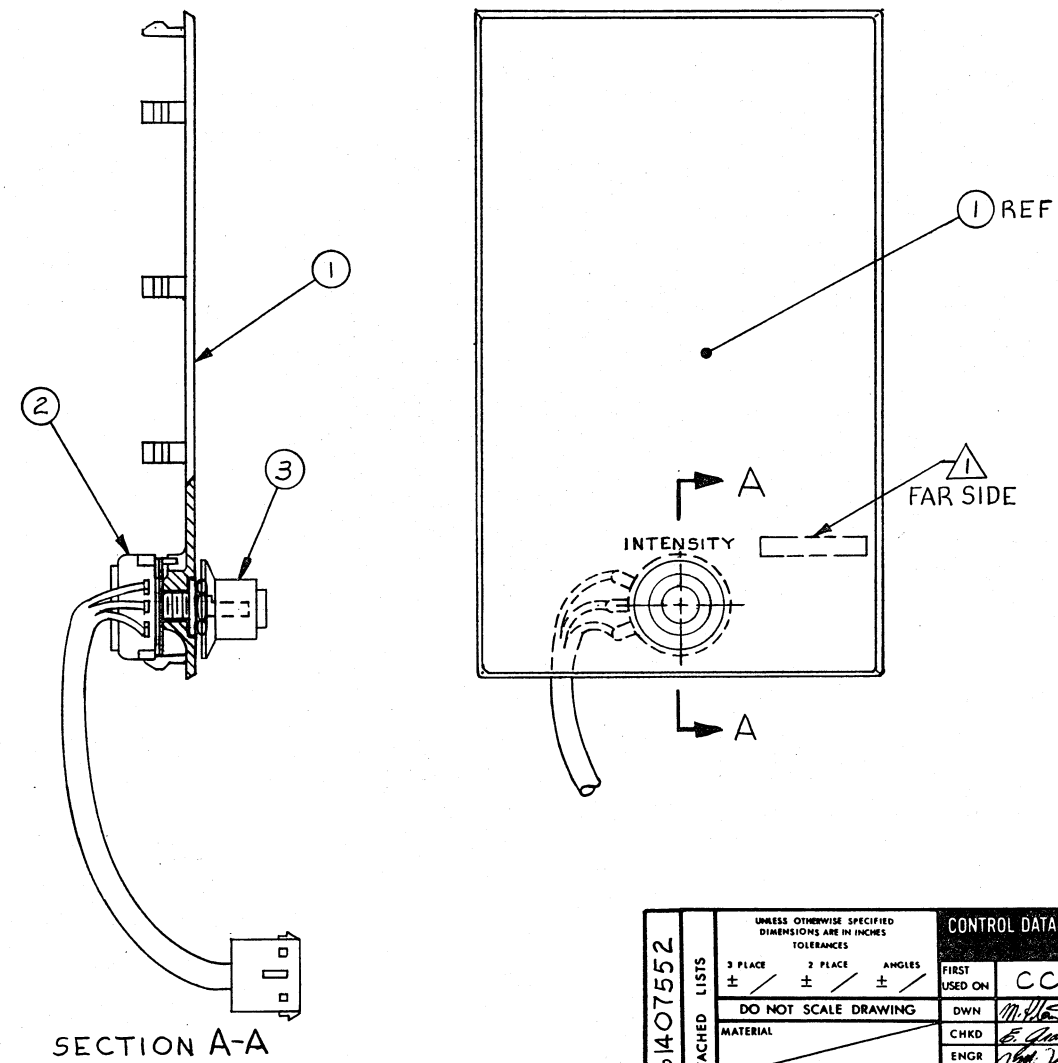

NOTES:

1. MARK "ASSY 61407552" IN AREA SHOWN PER CDC SPEC 10121508.

61407552

APL 61407552	DETACHED LISTS	UNLESS OTHERWISE SPECIFIED DIMENSIONS ARE IN INCHES TOLERANCES 3 PLACE ± / 2 PLACE ± / ANGLES ± /	CONTROL DATA
		DO NOT SCALE DRAWING	FIRST USED ON: CC5B1
		MATERIAL	DWN: M. Hartenberg 8/11/76
		FINISH	CHKD: E. Gross 8/12/76
			ENGR: [illegible] 10/13/76
			MFG: [illegible] 10/19/76
			APPR: [illegible] 10/19/76
			Mech.: E. N. Noe 10-28-76

TITLE: FRONT PANEL ASSEMBLY, MOD I

CODE IDENT: 15920 | C | DRAWING NO: 61407552

SCALE: NHA | SHEET 1 OF 1

BUILD ARC 230

ASSEMBLY PARTS LIST

PRINT DATE	PAGE	FILE CHANGE NO.
11-09-76	1	10989-60

DIV.	ASSEMBLY NUMBER	CD	REV.	DWG.	DESCRIPTION	MC	STATUS	STATUS DATE	ENG. RESP.	FILE DATE
0860	61407552 1		A	C	FRONT PANEL ASSY MOD 1	A	REL	10-28-76	CC5B1	11-09-76

T	FIND NO	LI	PART NUMBER	CD	QUANTITY	U/M	PART DESCRIPTION	MC	YLD	ECO. NO. IN	ECO. NO. OUT	S/N	WK IN	WK OUT
	001	01	71491844	8	1	PC	PANEL INDICATOR BLANK	P						
	002	01	61375200	5	1	PC	CABLE ASSY (INTENSITY CONT)	G						
	003	01	51915101	3	1	PC	KNOB, P-O SKIRTED/INSERT PLN	P						
							0003 TOTAL LINES							

DWN	D. Wells	10/8/74	CONTROL DATA	TITLE	PREFIX	DOCUMENT NO.	REV.
CHKD		10/22		INTENSITY CONTROL CABLE ASSY	A	61375200	B
ENG		10/14/74					
MFG		9/23/75		FIRST USED ON	NHA	SHEET 1 of 3	
APPR		9-23-75	CODE IDENT 15920	CC614 / CC681	61370600		

SHEET REVISION STATUS

3	2	1
	01	01
02	01	02
03	03	03
A	A	A
A	A	A
A	B	B

REVISION RECORD

REV	ECO	DESCRIPTION	DRFT	DATE	APP
		RELEASED CLASS "C"		10-14-74	
01	C039	ADDED PIN NOS TO POT	RP	11-8-74	
02	C0110	CHG LENGTH 6.0 TO 15.0		1-14-75	
03	C212	ADDED F/N 6 ADDED PIN VIEW OF CONN	R	3-27-75	
A	10653-1	RELEASED CLASS A	—	4/24/75	M.C.T.
A	9401-14	ADD INT DIV LABEL	—	8-3-75	M.C.T.
B	CD11547	Revised per ECO	rt	6/4	

INTER-DIVISIONAL DOCUMENT
This document is subject to change without prior notice. Users will receive copy only of the revised document.

AA3722

NOTES:
1. Apply label to cable per drawing 82191061, Method 6. Mark as shown.
2. Bulk identify with CDC Part number.

APL 61375200
DETACHED LISTS

AA3180 REV. 8/71

PRINTED IN U.S.A.

CONTROL DATA	CODE IDENT	SHEET		DOCUMENT NO.	REV.
	15920	2	A	61375200	B

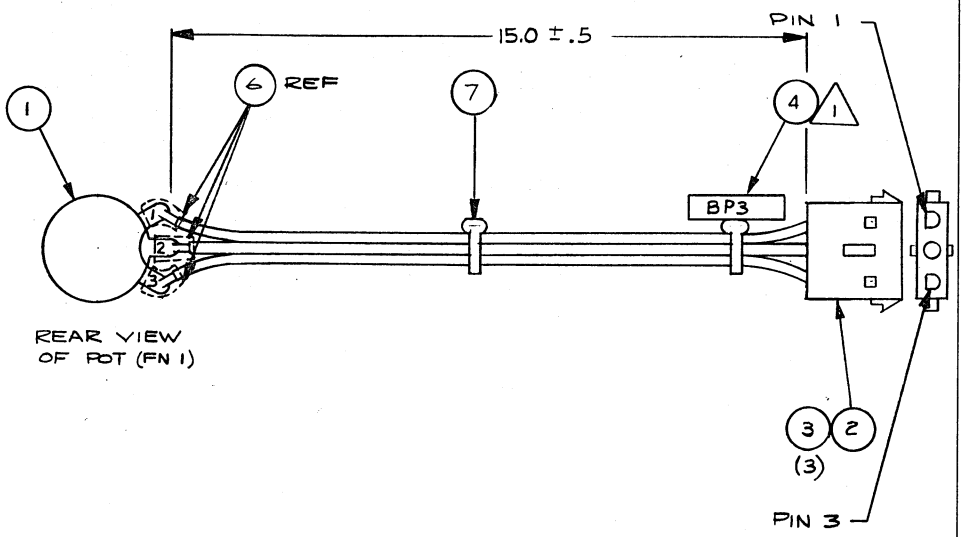

AA3185

PRINTED IN U.S.A.

CONTROL DATA		CODE IDENT 15920	SHEET 3	WL	DOCUMENT NO. 61375200	REV. A

CONDUCTOR IDENT	FIND NO	GAUGE (REF)	COLOR (REF)	LENGTH (APPROX)	ORIGIN		ACCESS FIND NO	DESTINATION		ACCESS FIND NO	REMARKS
1	5	20	4	15.0	P0T	1	1,6	BP3	1	3	
2	5	20	4	15.0	P0T	2	1,6	BP3	2	3	
3	5	20	4	15.0	P0T	3	1,6	BP3	3	3	

AA3183 REV. 8-70

PRINTED IN U.S.A.

BUILD ARC 104

ASSEMBLY PARTS LIST

PRINT DATE	PAGE	FILE CHANGE NO.
05-10-76	1	00011547

DIV.	ASSEMBLY NUMBER	CD	REV.	DWG.	DESCRIPTION	MC	STATUS	STATUS DATE	ENG. RESP.	FILE DATE
0860	61375200	5	B	A	CABLE ASSY (INTENSITY CONT)	G	REL	04-24-75	CC6B1A+B	05-10-76

T	FIND NO	LI	PART NUMBER	CD	M	QUANTITY	U/M	PART DESCRIPTION	MC	YLD	ECO. NO. IN	ECO. NO. OUT	S/N	WK IN	WK OUT
	001	01	51899042	9		1	PC	RES VAR .1MEGOHM FIG 2 2W 10P	P						
	002	01	51905901	8		1	PC	CONN RECPT 3 CONTACTS	P						
	003	01	51906200	4		3	PC	CONTACT, SKT 20-14GA STRIP T	P						
	004	01	94277409	2		2	PC	STRAP CABLE TIE TYPE 6	P			11547			7621
	004	02	94277409	2		1	PC	STRAP CABLE TIE TYPE 6	P		11547			7621	
	005	01	93462444	6		1 500	FT	WIR 20GA STRD YEL 300V UL PVC	W			11547			7621
	005	02	93462444	6		3 750	FT	WIR 20GA STRD YEL 300V UL PVC	W		11547			7621	
	006	01	24534707	5		200	FT	INS SLEEVE 3/16 BLACK	B						
	007	01	94277400	1		1	PC	STRAP CABLE TIE TYPE 1	P		11547			7621	
								0009 TOTAL LINES							

DWN	PLANTENBERG	12-3-76	CONTROL DATA
CHKD		12/9/76	
ENG		12/8/76	
MFG		12/10/76	
APPR		12-10-76	CODE IDENT 15920

TITLE: Cable Assembly
Rear Panel - Monitor

FIRST USED ON: CC555

PREFIX	DOCUMENT NO.	REV.
A	61407631	F

NHA 15630500 | SHEET 1 of 5

SHEET REVISION STATUS

5	4	3	2	1
A	A	A	A	A
B	A	A	A	B
B	A	C	A	C
B	A	D	D	D
B	A	D	D	E
B	A	D	D	F

REVISION RECORD

REV	ECO	DESCRIPTION	DRFT	DATE	APP
		RELEASED CLASS " "		12/20/76	
A	10653-77	RELEASED CLASS A		12/15/76	M.C.T.
B	12615	REVISED PER ECO	E.E.	12/20/77	
C	12908	REVISED PER ECO	WJD	5-9-78	
D	13540	REVISED PER ECO	[illegible]	6-29-79	
E	13820	PL CHANGE ONLY	[illegible]	12-7-79	
F	14024	PL CHANGE ONLY	D.S	4/25/80	

NOTES:
1. Cut wire into two 3" pieces to ground each end of coax.
See Sheet 2 for additional notes.

APL 61407631
DETACHED LISTS

AA3180 REV. 8/71

PRINTED IN U.S.A.

CONTROL DATA	CODE IDENT 15920	SHEET 2	A	DOCUMENT NO. 61407631	REV. A

Notes cont.:

2. 1.5 inch max from end of ferrule to far end of crimped on center contact (2).
3. Dress wires to left side of connector as shown before securing find number 12.
4. Bulk identify with CDC Part Number.
5. Identify pin 1 of connector housing (find no. 14) by placing a white dot adjacent to socket assigned as no. 1, as shown below.

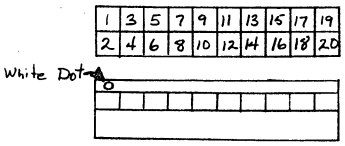

AA3185

PRINTED IN U.S.A.

CONTROL DATA		CODE IDENT 15920	SHEET 3	A	DOCUMENT NO. 61407631	REV. C

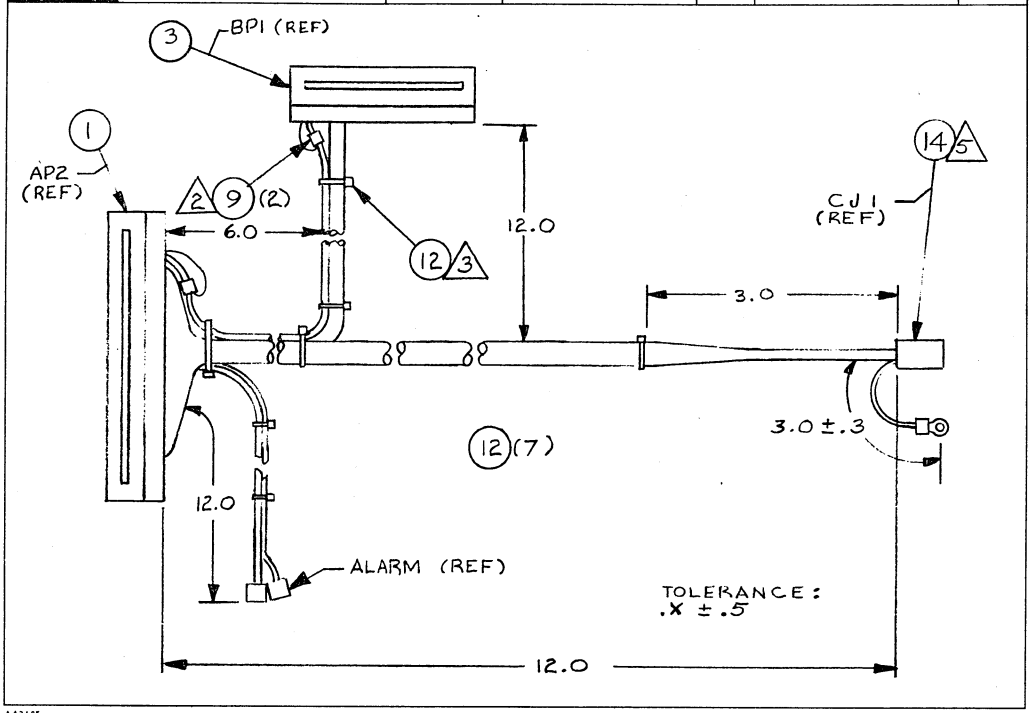

AA3185

PRINTED IN U.S.A.

CONTROL DATA		CODE IDENT 15920	SHEET 4	WL	DOCUMENT NO. 61407631	REV. A

CONDUCTOR IDENT.	FIND NO.	GAUGE (REF.)	COLOR (REF.)	LENGTH (APPROX)	ORIGIN		ACCESS FIND NO.	DESTINATION		ACCESS FIND NO.	REMARKS
1	7	24		18.0	AP2	4	2,6,9	BP1	12	2,6,9	Video
2	9	24	0	6.0	AP2	5	2	BP1	13	2	Ground Shield △1
3	17	24	9	18.0	AP2	8	2	BP1	6	2	H-Sync } TWPR
4	17	24	0	18.0	AP2	21	16	BP1	5	2	Ground }
5	17	24	0	18.0	CRIMP TWO WIRES IN ABOVE PIN			BP1	9	2	Ground }
6	17	24	9	18.0	AP2	9	2	BP1	10	2	V-Sync } TWPR
7	10	24	2	12.0	AP2	22	2	Alarm	(+)	5	=5V
8	8	24	9	12.0	AP2	3	2	Alarm	(-)	5	Ring Bell
9											
10	8	24	9	12.0	AP2	7	2	CJ1	13	15	Ptr Rcv Data
11	8	24	9	12.0	AP2	19	2	CJ1	14	15	Data Rate Sel
12	8	24	9	12.0	AP2	20	2	CJ1	17	15	Ptr Dsr/Co
13	11	24	5	6.0	CJ1	19	15	CE2		4	Ptr Protective Gnd
14	8	24	9	12.0	AP2	13	2	CJ1	02	15	Cts
15	8	24	9	12.0	AP2	12	2	CJ1	03	15	Co
16	8	24	9	12.0	AP2	10	2	CJ1	01	15	Dtr
17	8	24	9	12.0	AP2	15	2	CJ1	04	15	Dsr
18	8	24	9	12.0	AP2	14	2	CJ1	07	15	Rcv Data
19	8	24	9	12.0	AP2	16	2	CJ1	05	15	Tx Data
20	8	24	9	12.0	AP2	6	2	CJ1	06	15	Rts

AA3183 REV. B 71

PRINTED IN U.S.A.

CONTROL DATA		CODE IDENT 15920	SHEET 5	WL	DOCUMENT NO. 61407631	REV. B

CONDUCTOR IDENT.	FIND NO.	GAUGE (REF.)	COLOR (REF.)	LENGTH (APPROX)	ORIGIN		ACCESS FIND NO.	DESTINATION		ACCESS FIND NO.	REMARKS
21	9	24	0	12.0	AP2	17	2	CJ1	09	15	GROUND
22	8	24	9	12.0	AP2	11	2	CJ1	16	15	Sec RTS
23	8	24	9	12.0	AP2	1	2	CJ1	10	15	RECEIVE CLOCK
24	8	24	9	12.0	AP2	2	2	CJ1	15	15	TRANSMIT CLOCK
26	11	24	5	4.0				CJ1	19	4	GROUND

AA3183 REV. 8-71

PRINTED IN U.S.A.

BUILD ARC 104

ASSEMBLY PARTS LIST

PRINT DATE	PAGE	FILE CHANGE NO.
04-23-80	1	00014024

DIV.	ASSEMBLY NUMBER	CD	REV.	DWG.	DESCRIPTION	MC	STATUS	STATUS DATE	ENG. RESP.	FILE DATE
0860	61407631	3	F	A	CABLE ASSY REAR PNL MONITOR	A	REL	12-15-76	CC555	04-23-80

T	FIND NO	LI	PART NUMBER	CD	M	QUANTITY	U/M	PART DESCRIPTION	MC	YLD	ECO. NO. IN	ECO. NO. OUT	S/N	WK IN	WK OUT
	001	01	51652907	0		1	PC	CONN, PC EDGE 22 POS 3.588W	P						
	002	02	94219902	7		26	PC	CONTACT,FLAG 26-22AWG STRIP	P		12615	13963		7748	8019
	002	03	94219908	4		26	PC	CONTACT DUO-TYNE FLAG 26-22GA	P		13963			8019	
	003	01	51652904	7		1	PC	CONN, PC EDGE 14 POS 2.340W	P						
	004	01	93541038	1		1	PC	LUG, AMB I/R 26-20GA 8-10SS L	B						
	005	01	93747011	0		2	PC	CONT, RCPT 24-22AWG R/AG S	P			13820			8020
	005	02	51797213	9		2	PC	LUG NO 8 CRIMP 22-18AWG	P		13820	14024		8020	8021
	005	03	93747011	0		2	PC	CONT, RCPT 24-22AWG R/AG S	P		14024			8021	
	006	01	93083059	1		2	PC	SPLICES ELECT 1 IN	P						
	007	01	51003293	1		1 500	FT	CABLE RADIO FREQ COAX 93 OHMS	P						
	008	02	24548310	2		14	FT	WIR 24GA STRD WHT 300V UL PVC	W		12615			7748	
	009	01	24548301	1		2 800	FT	WIR 24GA STRD BLK 300V UL PVC	W						
	010	01	24548303	7		1	FT	WIR 24GA STRD RED 300V UL PVC	W						
	011	01	24548306	0		375	FT	WIR 24GA STRD GRN 300V UL PVC	W						
	012	03	94277400	1		6	PC	STRAP, CBL TIE TYP 1 TO 5/8	B		13540			7925	
	014	01	94361102	0		1	PC	CONN HSG, 20 CAV 2RX10SKT BLK	P						
	015	02	94245602	1		15	PC	CONT, SKT 22-26GA 7 W/F STRIP	P		12615			7748	
	016	01	94219903	5		1	PC	CONTACT,FLAG 22-18AWG STRIP	P			13963			8032
	016	02	94219909	2		1	PC	CONTACT DUO-TYNE FLAG 22-18GA	P		13963			8032	
	017	01	17605947	5		6	FT	WIR 24GA TWP BLK/WHT 300V	W						
	018	01	94277409	2		1	PC	STRAP, CBL TIE TYP 5 TO 5/8	B		13540			7925	

BUILD ARC 104

ASSEMBLY PARTS LIST

PRINT DATE	PAGE	FILE CHANGE NO.
04-23-80	2	00014024

DIV.	ASSEMBLY NUMBER	CD	REV.	DWG.	DESCRIPTION	MC	STATUS	STATUS DATE	ENG. RESP.	FILE DATE
0860	61407631	3	F	A	CABLE ASSY REAR PNL MONITOR	A	REL	12-15-76	CC555	04-23-80

T	FIND NO	LI	PART NUMBER	CD	M	QUANTITY	U/M	PART DESCRIPTION	MC	YLD	ECO. NO. IN	ECO. NO. OUT	S/N	WK IN	WK OUT
								0021 TOTAL LINES							

SHEET REVISION STATUS	REVISION RECORD						
	REV	CO	DESCRIPTION	DRFT	DATE	CHKD	APP
	A	12402-3	RELEASED CLASS A		8/12/77		MCL

SELECTION MATRIX

MODEM OR INTERFACE FUNCTION \ DATA SET ADAPTER CABLE ASSY	61407806	61407807	61407808	61407809	61407810	61407811	61407812
BELL 113A	X						
ANDERSON-JACOBSON MODEL ADAC 1200		X					
ANDERSON-JACOBSON MODEL ADAC 242			X				
SWITCHED CARRIER INTERFACE				X			
CONSTANT CARRIER INTERFACE					X		
FEMALE TO MALE CONVERTER						X	
1743-2 INTERFACE							X

DEFINITION TABLE

CABLE	FUNCTION OR PURPOSE
61407806	PINS 8 AND 20 CONNECTED.
61407807	PINS 11 AND 19 CONNECTED.
61407808	PIN 23 OPEN.
61407809	DIRECT CONNECTION TO INTERFACE WITHOUT MODEM. SWITCHED CARRIER REQUIRED.
61407810	DIRECT CONNECTION TO INTERFACE WITHOUT MODEM. CONSTANT CARRIER REQUIRED.
61407811 △2	FEMALE TO MALE CONVERTER FOR GREAT BRITIAN.
61407812 △3	ADAPT 755 PRINTER TO 1743-2 SYSTEM.

NOTES:

1. THE ADAPTERS ARE CONNECTED BETWEEN THE DATA SET CABLE SHIPPED WITH EQUIPMENT AND THE DATA SET CONNECTOR ON THE EQUIPMENT.

△2 ADAPTER 61407811 REQUIRES DATA SET CABLE 61407832/41.

△3 ADAPTER CONNECTS BETWEEN 755 PRINTER AND 1743-2 CONTROLLER.

66300462

REFERENCE DRAWING	CONTROL DATA		TITLE
	FIRST USED ON	CC 6B1	ADAPTER MATRIX
COMPONENTS, EXCEPT AS NOTED	DWN	E. GRONO 6/30/77	
TOLERANCE / VALUE / RATING	CHKD	E. Grono 7/12/77	CODE IDENT 15920
RES	ENGR	[illegible] 8/4/77	C
CAP	MFG	[illegible] 8/10/77	DRAWING NO 66300462
	APPR	E. N. [illegible] 8-11-77	SCALE / CROSS REF NO / SHEET 1 OF 1

62957400 H

DWN E. GRONO 7/1/77	CONTROL DATA	TITLE ADAPTER CABLE ASSY	PREFIX A	DOCUMENT NO. 61407806	REV. B
CHKD					
ENG 7/14/77					
MFG 7/20/77		FIRST USED ON CC6B1A-B	NHA 15620600	SHEET 1 OF 4	
APPR 8-11-77	CODE IDENT 15920				

SHEET REVISION STATUS

4	3	2	1
A	A	A	A
B	B	A	A

REVISION RECORD

REV	ECO	DESCRIPTION	DRFT	DATE	APP
A	12402-3	RELEASED CLASS A	—	8-12-77	[illegible]
B	12637	REVISED PER ECO	[illegible]	11/01/78	[illegible]

NOTES: 1. SEE 66300462 FOR PROPER USE OF EACH TAB.
2. APPLY LABEL TO CABLE PER DRAWING 82191061, METHOD 5.
3. APPLY LABEL TO CABLE PER CDC SPEC 1.30.808.
4. CABLE TIE FURNISHED WITH CONNECTOR.

APL 61407806
DETACHED LISTS

AA3180 REV. 8-71

PRINTED IN U.S.A.

CONTROL DATA		CODE IDENT 15920	SHEET 2	A	DOCUMENT NO. 61407806	REV. A

NOTE:
Cable as shown pictorally represents
Part No's 61407806 thru 61407810.

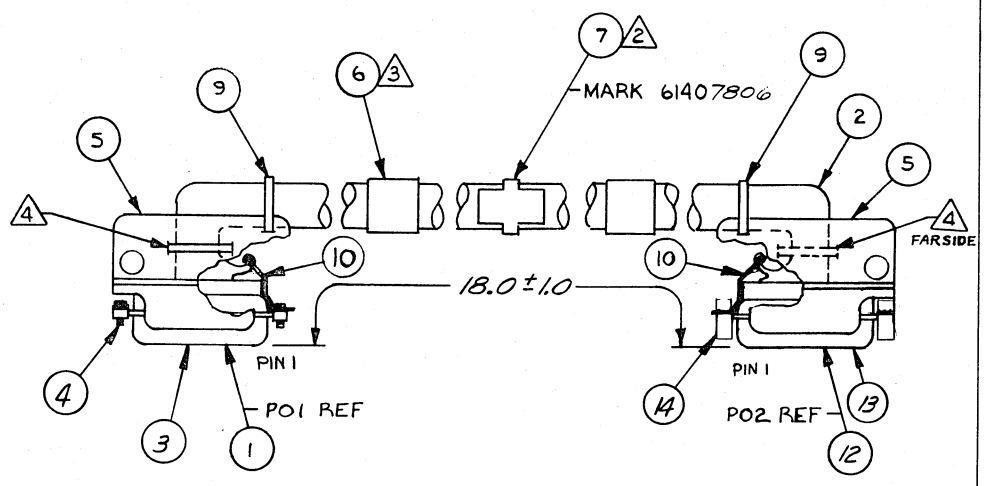

AA3185

PRINTED IN U.S.A.

[redacted] | CODE IDENT 15920 | SHEET 3 | WL | DOCUMENT NO. 6140780b | REV. B

CONDUCTOR IDENT.	FIND NO.	GAUGE (REF.)	COLOR (REF.)	LENGTH (APPROX) IN.	ORIGIN		ACCESS FIND NO.	DESTINATION		ACCESS FIND NO.	REMARKS
1	2	22	BARE	18	P01	01 GND CLIP 11	3,8,10	P02	01 GND CLIP 11	13,8,10	Solder bare drain wire with sleeving to gnd clip.
2		24	0			02	3		02	13	Solder black wire from Pin 1 to gnd clip.
3		24	9			03	3		03		
4		24	2			04	3		04		
5		24	5			05	3		05		
6		26	90			06	3		06		
7	2	26	91	18		07	3	P02	07	13	
8	16	26	9	3		08		P01	20		
9	2	26	92	18		08	3	P02	08	13	
10		26	905			20	3		20		
11		26	93			09	3		09		
12		26	94			10	3		10		
13		26	95			11	3		11		
14		26	96			12	3		12		
15		26	97			13	3		13		
16		26	98			14	3		14		
17		26	900			15	3		15		
18		26	901			16	3		16		
19		26	902			17	3		17		
20		26	903			18	3		18		
21	2	26	904	18	P01	19	3	P02	19	13	

AA3183 REV. 8/71

PRINTED IN U.S.A.

[redacted] | CODE IDENT 15920 | SHEET 4 | WL | DOCUMENT NO. 6140780b | REV. B

CONDUCTOR IDENT.	FIND NO.	GAUGE (REF.)	COLOR (REF.)	LENGTH (APPROX) IN.	ORIGIN		ACCESS FIND NO.	DESTINATION		ACCESS FIND NO.	REMARKS
22	2	26	906	18	P01	21	3	P02	21	13	
23		26	907			22	3		22		
24		26	908			23	3		23		
25		26	910			24	3		24		
26	2	26	911	18	P01	25	3	P02	25	13	

AA3183 REV. 8/71

PRINTED IN U.S.A.

BUILD ARC 104

ASSEMBLY PARTS LIST

PRINT DATE	PAGE	FILE CHANGE NO.
11-28-77	1	00012637

DIV.	ASSEMBLY NUMBER	CD	REV.	DWG.	DESCRIPTION	MC	STATUS	STATUS DATE	ENG. RESP.	FILE DATE
0860	61407806	1	B	A	ADAPTER CABLE ASSY	A	REL	08-12-77		11-28-77

T	FIND NO	LI	PART NUMBER	CD	M	QUANTITY		U/M	PART DESCRIPTION	MC	YLD	ECO. NO. IN	ECO. NO. OUT	S/N	WK IN	WK OUT
	001	01	53397814	4		1		PC	CONN, MALE 25POSN PLUG ALONE	P						
	002	01	51908500	5		1	500	FT	CBL, SHLD FIG 1 25 CNDCT 300V	W						
	003	01	53397817	7		25		PC	CONTACT, STRIP PINS 20-24GA	P						
	004	01	94288021	2		?		PC	LKG DEVICE, CONNECTOR TYP 3M	P						
	005	01	51908402	4		?		PC	CONN HOOD, .430/.390 CBL DIA	P						
	006	01	10123821	0		?		PC	LABEL, CBL MK (CDC 12 RVLOPS)	B						
	007	01	94277407	6		1		PC	STRAP CABLE TIE TYPE 4	B						
	008	01	24528606	7			200	FT	TBG, INSUL NO.17 BLK UL PVC	B						
	009	01	94277400	1		?		PC	STRAP CABLE TIE TYPE 1	B						
	010	01	71491967	7		?		PC	CLIP, GROUND (COPPER/TIN PL)	P						
	011	01	24548301	1			100	FT	WIR 24GA STRD BLK 300V UL PVC	W						
	012	01	53397914	2		1		PC	CONN, FEM 25POSN PLUG ALONE	P						
	013	01	53397917	5		25		PC	CONTACT, STRIP SKT 20-24GA	P						
	014	01	94288024	6		?		PC	LKG DEVICE, CONN TYP 4 W/TYP3	P						
	015	01	66300462	0		REF		PC	ADAPTER MATRIX	D						
	016	01	18563109	0			250	FT	WIRE 26 GA THIN WALL INS 300V	W						
									0016 TOTAL LINES							

DWN	E. GRONO 7/1/77	CONTROL DATA	TITLE ADAPTER CABLE ASSY	PREFIX A	DOCUMENT NO. 61407807	REV B
CHKD	[illegible] 7/6/77					
ENG	[illegible] 8/4/77					
MFG	[illegible] 8/10/77		FIRST USED ON CC6B1A-B	NHA 15620600	SHEET 1 OF 4	
APPR	E. N. Noe 8-11-77	CODE IDENT 15920				

SHEET REVISION STATUS

4	3	2	1
A	A	A	A
B	B	A	B

REVISION RECORD

REV	ECO	DESCRIPTION	DRFT	DATE	APP
A	12402-3	RELEASED CLASS A		8-12-77	MCF
B	12637	REVISED PER ECO	[illegible]	1/10/78	MJO

NOTES: 1. SEE 66300462 FOR PROPER USE OF EACH TAB.
2. APPLY LABEL TO CABLE PER DRAWING 82191061, METHOD 5.
3. APPLY LABEL TO CABLE PER CDC SPEC 1.30.808.
4. CABLE TIE FURNISHED WITH CONNECTOR.

APL 61407807

DETACHED LISTS

AA3140 REV. 8 71 PRINTED IN U.S.A.

	CODE IDENT 15920	SHEET 2	A	DOCUMENT NO. 61407807	REV. A

NOTE:
Cable as shown pictorally represents
Part No's 61407806 thru 61407810.

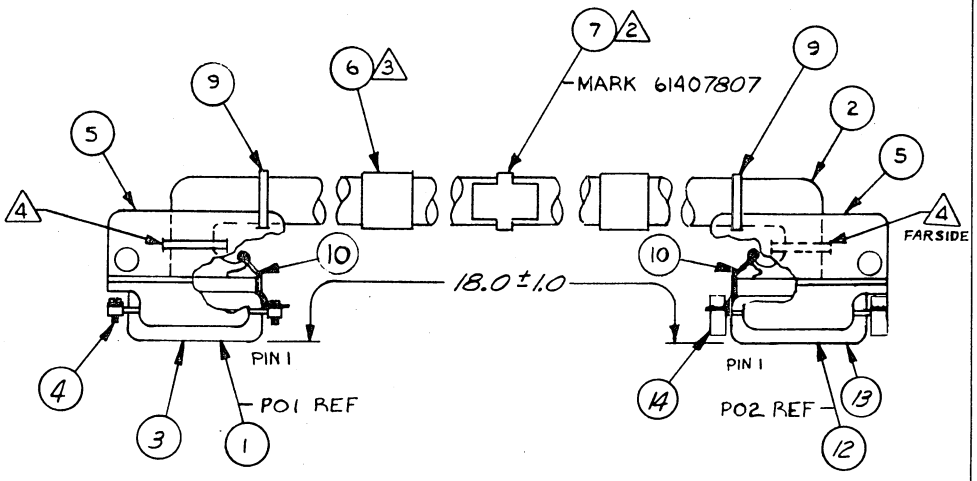

AA3185 PRINTED IN U.S.A.

[redacted]		CODE IDENT 15920	SHEET 3	WL	DOCUMENT NO. 61407807	REV. B

CONDUCTOR IDENT.	FIND NO.	GAUGE (REF.)	COLOR (REF.)	LENGTH (APPROX) IN	ORIGIN		ACCESS FIND NO.	DESTINATION		ACCESS FIND NO.	REMARKS
1	2	22	Bare	18	P01	01 Gnd Clip	3,8,10 11	P02	01 Gnd Clip	13,8,10 11	Solder bare drain wire with sleeving to gnd clip. Solder black wire from Pin 1 to gnd clip.
2	2	24	0	18	P01	02	3	P02	02	13	
3	↑	24	9	↑	P01	03	3	P02	03	↑	
4		24	2		P01	04	3	P02	04		
5		24	5		P01	05	3	P02	05		
6		26	90		P01	06	3	P02	06		
7		26	91		P01	07	3	P02	07		
8		26	92		P01	08	3	P02	08		
9		26	93		P01	09	3	P02	09		
10	↓	26	94	↓	P01	10	3	P02	10	↓	
11	2	26	95	18	P01	11	3	P02	11	13	
12	16 2	26 26	9 96	3 18	P01 P01	11 12	– 3	P01 P02	19 12	– 13	
13	↑	26	97	↑	P01	13	3	P02	13	↑	
14		26	98		P01	14	3	P02	14		
15		26	900		P01	15	3	P02	15		
16		26	901		P01	16	3	P02	16		
17		26	902		P01	17	3	P02	17		
18	↓	26	903	↓	P01	18	3	P02	18	↓	
19	2	26	904	18	P01	19	3	P02	19	13	

AA3183 REV. 8/71 PRINTED IN U.S.A.

[redacted]		CODE IDENT 15920	SHEET 4	WL	DOCUMENT NO. 61407807	REV. B

CONDUCTOR IDENT.	FIND NO.	GAUGE (REF.)	COLOR (REF.)	LENGTH (APPROX) IN.	ORIGIN		ACCESS FIND NO.	DESTINATION		ACCESS FIND NO.	REMARKS
20	2	26	905	18	P01	20	3	P02	20	13	
21	2	26	906	↑	P01	21	3	P02	21	↑	
22	2	26	907		P01	22	3	P02	22		
23	2	26	908		P01	23	3	P02	23		
24	2	26	910	↓	P01	24	3	P02	24		
25	2	26	911	18	P01	25	3	P02	25	13	

AA3183 REV. 8/71 PRINTED IN U.S.A.

BUILD ARC 104

ASSEMBLY PARTS LIST

PRINT DATE	PAGE	FILE CHANGE NO.
11-28-77	1	00012637

DIV.	ASSEMBLY NUMBER	CD	REV.	DWG.	DESCRIPTION	MC	STATUS	STATUS DATE	ENG. RESP.	FILE DATE
0860	61407807	9	B	A	ADAPTER CABLE ASSY	A	REL	08-12-77		11-28-77

T	FIND NO	LI	PART NUMBER	CD	M	QUANTITY		U/M	PART DESCRIPTION	MC	YLD	ECO. NO. IN	ECO. NO. OUT	S/N	WK IN	WK OUT
	001	01	53397814	4		1		PC	CONN, MALE 25POSN PLUG ALONE	P						
	002	01	51908500	5		1	500	FT	CBL, SHLD FIG 1 25 CNDCT 300V	W						
	003	01	53397817	7		25		PC	CONTACT, STRIP PINS 20-24GA	P						
	004	01	94288021	2		2		PC	LKG DEVICE, CONNECTOR TYP 3M	P						
	005	01	51908402	4		2		PC	CONN HOOD, .430/.390 CBL DIA	P						
	006	01	10123821	0		2		PC	LABEL, CBL MK (CDC 12 RVLOPS)	B						
	007	01	94277407	6		1		PC	STRAP CABLE TIE TYPE 4	B						
	008	01	24528606	7			200	FT	TBG, INSUL NO.17 BLK UL PVC	B						
	009	01	94277400	1		2		PC	STRAP CABLE TIE TYPE 1	B						
	010	01	71491967	7		2		PC	CLIP, GROUND (COPPER/TIN PL)	P						
	011	01	24548301	1			100	FT	WIR 24GA STRD BLK 300V UL PVC	W						
	012	01	53397914	2		1		PC	CONN, FEM 25POSN PLUG ALONE	P						
	013	01	53397917	5		25		PC	CONTACT, STRIP SKT 20-24GA	P						
	014	01	94288024	6		2		PC	LKG DEVICE, CONN TYP 4 W/TYP3	P						
	015	01	66300462	0		REF		PC	ADAPTER MATRIX	D						
	016	01	18563109	0			250	FT	WIRE 26 GA THIN WALL INS 300V	W						
									0016 TOTAL LINES							

DWN	E. GRONO 7/1/77	CONTROL DATA	TITLE	PREFIX	DOCUMENT NO.	REV
CHKD	[signature]	[signature]	ADAPTER CABLE ASSY	A	61407808	B
ENG	[signature]	7/11/77				
MFG	[signature]	8/10/77	FIRST USED ON	NHA	SHEET 1 OF 4	
APPR	[signature]	8-11-77	CODE IDENT 15920	CC6B1A-B	15620600	

SHEET REVISION STATUS

4	3	2	1
A	A	A	A
B	B	A	B

REVISION RECORD

REV	ECO	DESCRIPTION	DRFT	DATE	APP
A	12402-3	RELEASED CLASS A	/	8-12-77	[illegible]
B	12637	REVISED PER ECO	[illegible]	11/9/78	[illegible]

NOTES: 1. SEE 66300462 FOR PROPER USE OF EACH TAB.
(2) APPLY LABEL TO CABLE PER DRAWING 82191061, METHOD 5.
(3) APPLY LABEL TO CABLE PER CDC SPEC 1.30.808.
(4) CABLE TIE FURNISHED WITH CONNECTOR.

APL 61407808

DETACHED LISTS

AA3186 REV. 8-71

PRINTED IN U.S.A.

[redacted]	CODE IDENT 15920	SHEET 2	A	DOCUMENT NO. 61407808	REV. A

NOTE:
Cable as shown pictorally represents
Part No's 61407806 thru 61407810.

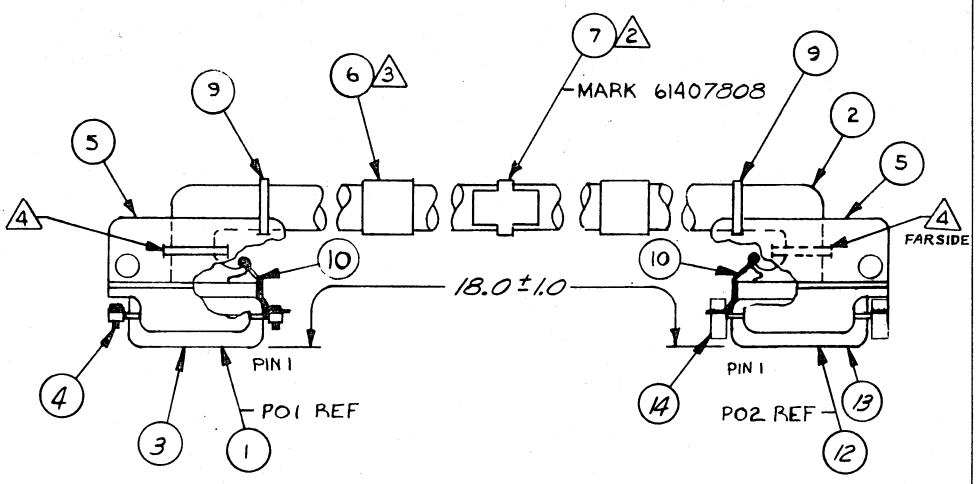

AA3185

PRINTED IN U.S.A.

[redacted]		CODE IDENT 15920	SHEET 3	WL	DOCUMENT NO. 61407808	REV. B

CONDUCTOR IDENT.	FIND NO.	GAUGE (REF.)	COLOR (REF.)	LENGTH (APPROX) IN.	ORIGIN		ACCESS FIND NO.	DESTINATION		ACCESS FIND NO.	REMARKS
1	2	22	Bare	18	P01	01 Gnd Clip	3,8,10 11	P02	01 Gnd Clip	13,8,10 11	Solder bare drain wire with sleeving to gnd clip. Solder black wire from Pin 1 to gnd clip.
2	2	24	0	18	P01	02	3	P02	02	13	
3		24	9		P01	03	3	P02	03		
4		24	2		P01	04	3	P02	04		
5		24	5		P01	05	3	P02	05		
6		26	90		P01	06	3	P02	06		
7		26	91		P01	07	3	P02	07		
8		26	92		P01	08	3	P02	08		
9		26	93		P01	09	3	P02	09		
10		26	94		P01	10	3	P02	10		
11		26	95		P01	11	3	P02	11		
12		26	96		P01	12	3	P02	12		
13		26	97		P01	13	3	P02	13		
14		26	98		P01	14	3	P02	14		
15		26	900		P01	15	3	P02	15		
16		26	901		P01	16	3	P02	16		
17		26	902		P01	17	3	P02	17		
18		26	903		P01	18	3	P02	18		
19	2	26	904	18	P01	19	3	P02	19	13	

AA3183 REV. 8/71 PRINTED IN U.S.A.

[redacted]		CODE IDENT 15920	SHEET 4	WL	DOCUMENT NO. 61407808	REV. B

CONDUCTOR IDENT.	FIND NO.	GAUGE (REF.)	COLOR (REF.)	LENGTH (APPROX) IN.	ORIGIN		ACCESS FIND NO.	DESTINATION		ACCESS FIND NO.	REMARKS
20	2	26	905	18	P01	20	3	P02	20	13	
21	2	26	906		P01	21	3	P02	21	13	
22	2	26	907		P01	22	3	P02	22	13	
24	2	26	910		P01	24	3	P02	24	13	
25	2	26	911	18	P01	25	3	P02	25	13	

AA3183 REV. 8/71 PRINTED IN U.S.A.

BUILD ARC 104

ASSEMBLY PARTS LIST

PRINT DATE	PAGE	FILE CHANGE NO.
11-28-77	1	00012637

DIV.	ASSEMBLY NUMBER	CD	REV.	DWG.	DESCRIPTION	MC	STATUS	STATUS DATE	ENG. RESP.	FILE DATE
0860	6140780A	7	R	A	ADAPTER CABLE ASSY	A	REL	08-12-77		11-28-77

T	FIND NO	LI	PART NUMBER	CD	M	QUANTITY		U/M	PART DESCRIPTION	MC	YLD	ECO. NO. IN	ECO. NO. OUT	S/N	WK IN	WK OUT
	001	01	53397814	4		1		PC	CONN, MALE 25POSN PLUG ALONE	P						
	002	01	51908500	5		1	500	FT	CBL, SHLD FIG 1 25 CNDCT 300V	W						
	003	01	53397817	7		25		PC	CONTACT, STRIP PINS 20-24GA	P			12637			7808
	003	02	53397817	7		24		PC	CONTACT, STRIP PINS 20-24GA	P		12637			7808	
	004	01	94288021	2		2		PC	LKG DEVICE, CONNECTOR TYP 3M	P						
	005	01	51908402	4		2		PC	CONN HOOD, .430/.390 CBL DIA	P						
	006	01	10123821	0		2		PC	LABEL, CRL MK (CDC 12 RVLOPS)	B						
	007	01	94277407	6		1		PC	STRAP CABLE TIE TYPE 4	B						
	008	01	24528606	7			200	FT	TBG, INSUL NO.17 BLK UL PVC	B						
	009	01	94277400	1		2		PC	STRAP CABLE TIE TYPE 1	B						
	010	01	71491967	7		2		PC	CLIP, GROUND (COPPER/TIN PL)	P						
	011	01	24548301	1			100	FT	WIR 24GA STRD BLK 300V UL PVC	W						
	012	01	53397914	2		1		PC	CONN, FEM 25POSN PLUG ALONE	P						
	013	01	53397917	5		25		PC	CONTACT, STRIP SKT 20-24GA	P			12637			7808
	013	02	53397917	5		24		PC	CONTACT, STRIP SKT 20-24GA	P		12637			7808	
	014	01	94288024	6		2		PC	LKG DEVICE, CONN TYP 4 W/TYP3	P						
	015	01	66300462	0		REF		PC	ADAPTER MATRIX	D						
									0017 TOTAL LINES							

DWN	E. GRONO 7/1/77	CONTROL DATA	TITLE	PREFIX	DOCUMENT NO.	REV.
CHKD	[illegible] 7/6/77		ADAPTER CABLE ASSY	A	61407809	F
ENG	[illegible] 7/7/77					
MFG	[illegible] 7/10/77		FIRST USED ON	NHA	SHEET 1 OF 4	
APPR	E. H. Noe 7-11-77	CODE IDENT 15920	CC6B1A-B	15620600		

SHEET REVISION STATUS

4	3	2	1
A	A	A	A
B	B	A	B

REVISION RECORD

REV	ECO	DESCRIPTION	DRFT	DATE	APP
A	12402-3	RELEASED CLASS A	/	8-12-77	MCF
B	12637	REVISED PER ECO	[illegible]	11/9/78	RJO

NOTES:
1. SEE 66300462 FOR PROPER USE OF EACH TAB.
2. APPLY LABEL TO CABLE PER DRAWING 82191061, METHOD 5.
3. APPLY LABEL TO CABLE PER CDC SPEC 1.30.808.
4. CABLE TIE FURNISHED WITH CONNECTOR.

APL 61407809

DETACHED LISTS

AA3146 REV. B 71

PRINTED IN U.S.A.

[redacted]	CODE IDENT 15920	SHEET 2	A	DOCUMENT NO. 61407809	REV. A

NOTE:
Cable as shown pictorally represents
Part No's 61407806 thru 61407810.

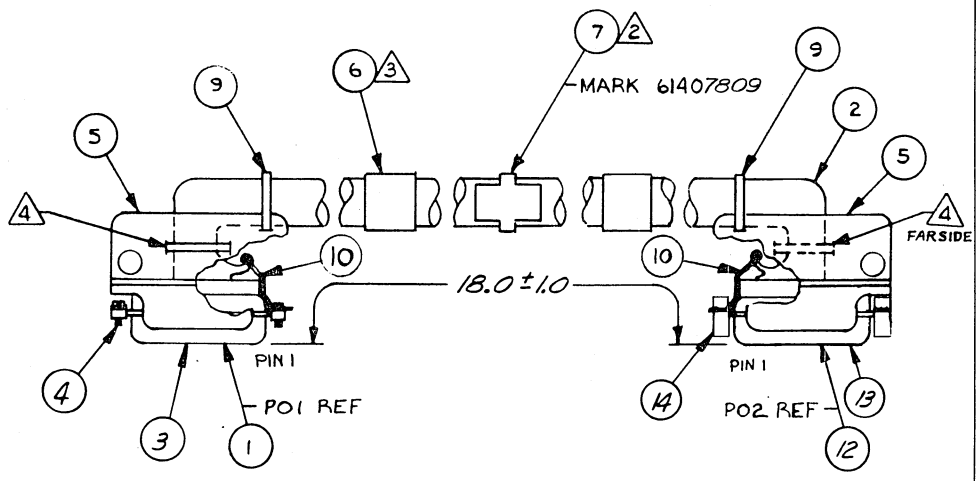

AA3185

PRINTED IN U.S.A.

[redacted]		CODE IDENT 15920	SHEET 3	WL	DOCUMENT NO. 61407809	REV B

CONDUCTOR IDENT	FIND NO	GAUGE (REF.)	COLOR (REF.)	LENGTH (APPROX) IN.	ORIGIN		ACCESS FIND NO	DESTINATION		ACCESS FIND NO.	REMARKS
1	2	22	BARE	18	P01	01 GND	3,8,10 CLIP 11	P02	01 GND	3,8,10 CLIP 11	Solder bare drain wire with sleeving to gnd clip.
2	2	24	0	18	P01	02	3	P02	03	13	Solder black wire from Pin 1 to gnd clip.
3	2	24	9	18	P01	03	3	P02	02	13	
4	10	26	9	3.0	P01	04	3	P01	05	—	
5	2	24	5	18	P01	05	3	P02	08	13	
6	2	26	90	18	P01	06	3	P02	20	13	
7	2	26	91	18	P01	07	3	P02	07	13	
8	2	26	92	18	P01	08	3	P02	04	—	
9	10	26	9	3.0	P02	04	13	P02	05	13	
10	2	26	93	18	P01	09	3	P02	09	13	
11	2	26	94	18	P01	10	3	P02	10	13	
12	2	26	95	18	P01	11	3	P02	11	13	
13	2	26	96	18	P01	12	3	P02	13	—	
14	10	26	9	3.0	P02	13	13	P02	19	13	
15	10	26	9	3.0	P01	13	3	P01	19	—	
16	2	26	904	18	P01	19	3	P02	12	13	
17	2	26	98	18	P01	14	3	P02	16	13	
18	2	26	900	18	P01	15	3	P02	15	13	
19	2	26	901	18	P01	16	3	P02	14	13	
20	2	26	902	18	P01	17	3	P02	17	13	

AA3183 REV. 8-71 PRINTED IN U.S.A.

[redacted]		CODE IDENT 15920	SHEET 4	WL	DOCUMENT NO. 61407809	REV. B

CONDUCTOR IDENT.	FIND NO.	GAUGE (REF.)	COLOR (REF.)	LENGTH (APPROX) IN.	ORIGIN		ACCESS FIND NO.	DESTINATION		ACCESS FIND NO.	REMARKS
21	2	26	903	18	P01	18	3	P02	18	13	
22	2	26	905		P01	20	3	P02	6		
23	2	26	906		P01	21	3	P02	21		
24	2	26	907		P01	22	3	P02	22		
25	2	26	908		P01	23	3	P02	23		
26	2	26	910		P01	24	3	P02	24		
27	2	26	911	18	P01	25	3	P02	25	13	

AA3183 REV. 8/71 PRINTED IN U.S.A.

BUILD ARC 104

ASSEMBLY PARTS LIST

PRINT DATE	PAGE	FILE CHANGE NO.
08-09-78	1	00012637

DIV.	ASSEMBLY NUMBER	CD	REV.	DWG.	DESCRIPTION	MC	STATUS	STATUS DATE	ENG. RESP.	FILE DATE
0860	61407809	5	B	A	ADAPTER CABLE ASSY	A	REL	08-12-77	0	08-09-78

T	FIND NO	LI	PART NUMBER	CD	M	QUANTITY	U/M	PART DESCRIPTION	MC	YLD	ECO. NO. IN	ECO. NO. OUT	S/N	WK IN	WK OUT
	001	01	53397814	4		1	PC	CONN, MALE 25POSN PLUG ALONE	P						
	002	01	51908500	5		1 500	FT	CBL, SHLD FIG 1 25 CNDCT 300V	W						
	003	01	53397817	7		25	PC	CONTACT, STRIP PINS 20-24GA	P						
	004	01	94288021	2		2	PC	LKG DEVICE, CONNECTOR TYP 3M	P						
	005	01	51908402	4		2	PC	CONN HOOD, .430/.390 CBL DIA	P						
	006	01	10123821	0		2	PC	LABEL, CBL MK (CDC 12 RVLOPS)	B						
	007	01	94277407	6		1	PC	STRAP CABLE TIE TYPE 4	B						
	008	01	24528606	7		200	FT	TBG, INSUL NO.17 BLK UL PVC	B						
	009	01	94277400	1		2	PC	STRAP CABLE TIE TYPE 1	B						
	010	01	71491967	7		2	PC	CLIP, GROUND (COPPER/TIN PL)	P						
	011	01	24548301	1		100	FT	WIR 24GA STRD BLK 300V UL PVC	W						
	012	01	53397914	2		1	PC	CONN, FEM 25POSN PLUG ALONE	P						
	013	01	53397917	5		25	PC	CONTACT, STRIP SKT 20-24GA	P						
	014	01	94288024	6		2	PC	LKG DEVICE, CONN TYP 4 W/TYP3	P						
	015	01	66300462	0		REF	PC	ADAPTER MATRIX	D						
	016	01	18563109	0		1	FT	WIRE 26 GA THIN WALL INS 300V	W						
								0016 TOTAL LINES							

DWN E. GRONO 7/1/77	UNLESS OTHERWISE SPECIFIED	TITLE ADAPTER CABLE ASSY	PREFIX A	DOCUMENT NO. 61407810	REV. B
CHKD					
ENG					
MFG		FIRST USED ON CC6B1A-B	NHA 15620600	SHEET 1 OF 4	
APPR	CODE IDENT 15920				

SHEET REVISION STATUS				REVISION RECORD					
4	3	2	1	REV	ECO	DESCRIPTION	DRFT	DATE	APP
A	A	A	A	A	12402-3	RELEASED CLASS A		8-12-77	mcx
B	B	A	B	B	12637	REVISED PER ECO		11/9/78	

NOTES: 1. SEE 66300462 FOR PROPER USE OF EACH TAB.
2. APPLY LABEL TO CABLE PER DRAWING 82191061, METHOD 5.
3. APPLY LABEL TO CABLE PER CDC SPEC 1.30.808.
4. CABLE TIE FURNISHED WITH CONNECTOR.

APL 61407810

DETACHED LISTS

AA3180 REV. 8/71 PRINTED IN U.S.A.

	CODE IDENT	SHEET		DOCUMENT NO.	REV.
	15920	2	A	61407810	A

NOTE:
Cable as shown pictorally represents
Part No's 61407806 thru 61407810.

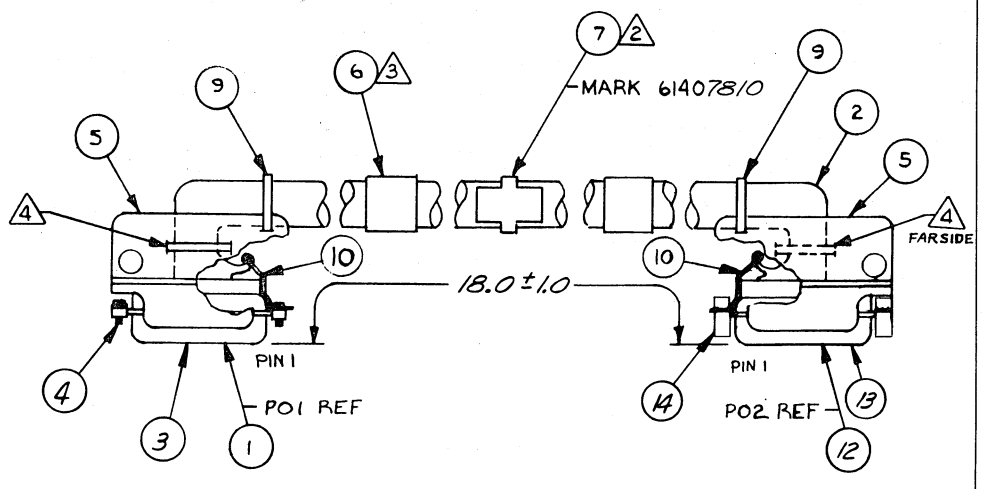

AA3185 PRINTED IN U.S.A.

		CODE IDENT	SHEET	WL	DOCUMENT NO.	REV.
		15920	3		61407810	E

CONDUCTOR IDENT.	FIND NO.	GAUGE (REF.)	COLOR (REF.)	LENGTH (APPROX) IN.	ORIGIN		ACCESS FIND NO.	DESTINATION		ACCESS FIND NO.	REMARKS
1	2	22	Bare	18	P01	01 Gnd Clip	3,8,10 11	P02	01 Gnd Clip	13,8,10 11	Solder bare drain wire with sleeving to gnd clip. Solder black wire from Pin 1 to gnd clip.
2	2	24	0	18	P01	02	3	P02	03	13	
3	2	24	9	18	P01	03	3	P02	02	13	
4	16	24	9	3	P01	04	3	P01	05	13	
5	16	24	9	3	P02	05	13	P02	04	13	
6	16	26	9	3	P01	06	3	P01	08	3	
7 8	16 2	26 26	9 91	3 18	P01 P01	08 07	- 3	P01 P02	20 07	3 13	
9	16	26	92	3	P02	06	13	P02	08	13	
10 11	16 2	26 26	9 93	3 18	P02 P01	08 09	- 3	P02 P02	20 09	13 13	
12	2	26	94		P01	10	3	P02	10		
13		26	95		P01	11	3	P02	11		
14		26	96		P01	12	3	P02	12		
15		26	97		P01	13	3	P02	13		
16		26	98		P01	14	3	P02	14		
17		26	900		P01	15	3	P02	15		
18		26	901		P01	16	3	P02	16		
19		26	902		P01	17	3	P02	17		
20		26	903		P01	18	3	P02	18		
21	2	26	904	18	P01	19	3	P02	19	13	

AA3183 REV. 8/71

PRINTED IN U.S.A.

		CODE IDENT	SHEET	WL	DOCUMENT NO.	REV.
		15920	4		61407810	B

CONDUCTOR IDENT.	FIND NO.	GAUGE (REF.)	COLOR (REF.)	LENGTH (APPROX) IN.	ORIGIN		ACCESS FIND NO.	DESTINATION		ACCESS FIND NO.	REMARKS
22	2	26	906	18	P01	21	3	P02	21	13	
23	2	26	907		P01	22	3	P02	22		
24	2	26	908		P01	23	3	P02	23		
25	2	26	910		P01	24	3	P02	24		
26	2	26	911	18	P01	25	3	P02	25	13	

AA3183 REV. 8/71

PRINTED IN U.S.A.

BUILD ARC 194

ASSEMBLY PARTS LIST

PRINT DATE	PAGE	FILE CHANGE NO.
08-08-78	1	00012637

DIV.	ASSEMBLY NUMBER	CD	REV.	DWG.	DESCRIPTION	MC	STATUS	STATUS DATE	ENG. RESP.	FILE DATE
0860	61407810	3	B	A	ADAPTER CABLE ASSY	A	REL	08-12-77	0	08-08-78

T	FIND NO	LI	PART NUMBER	CD	M	QUANTITY		U/M	PART DESCRIPTION	MC	YLD	ECO. NO. IN	ECO. NO. OUT	S/N	WK IN	WK OUT
	001	01	53397814	4		1		PC	CONN, MALE 25POSN PLUG ALONE	P						
	002	01	51908500	5		1	500	FT	CBL, SHLD FIG 1 25 CNDCT 300V	W						
	003	01	53397817	7		25		PC	CONTACT, STRIP PINS 20-24GA	P						
	004	01	94288021	2		2		PC	LKG DEVICE, CONNECTOR TYP 3M	P						
	005	01	51908402	4		2		PC	CONN HOOD, .430/.390 CBL DIA	P						
	006	01	10123821	3		2		PC	LABEL, CBL MK (CDC 12 RVLOPS)	B						
	007	01	94277407	6		1		PC	STRAP CABLE TIE TYPE 4	B						
	008	01	24529606	7			200	FT	TBG, INSUL NO.17 BLK UL PVC	B						
	009	01	94277400	1		2		PC	STRAP CABLE TIE TYPE 1	B						
	010	01	71491967	7		2		PC	CLIP, GROUND (COPPER/TIN PL)	P						
	011	01	24548301	1			100	FT	WIR 24GA STRD BLK 300V UL PVC	W						
	012	01	53397914	2		1		PC	CONN, FEM 25POSN PLUG ALONE	P						
	013	01	53397917	5		25		PC	CONTACT, STRIP SKT 20-24GA	P						
	014	01	94288024	6		2		PC	LKG DEVICE, CONN TYP 4 W/TYP3	P						
	015	01	66300462	0		REF		PC	ADAPTER MATRIX	D						
	016	01	18563109	9		2		FT	WIRE 26 GA THIN WALL INS 300V	W						
									0016 TOTAL LINES							

DWN	E. GRONO 7/1/77	CONTROL DATA	TITLE ADAPTER CABLE ASSY	PREFIX A	DOCUMENT NO. 61407811	REV E
CHKD	[illegible] 7/6/77					
ENG	[illegible] 8/4/77					
MFG	[illegible] 8/10/77		FIRST USED ON CC6B1A-B	NHA 15620600	SHEET 1 OF 4	
APPR	E. N. Noe 8-11-77	CODE IDENT 15920				

SHEET REVISION STATUS

4	3	2	1
A	A	A	A
A	A	A	B

REVISION RECORD

REV	ECO	DESCRIPTION	DRFT	DATE	APP
A	12402-3	RELEASED CLASS A	/	8-12-77	MCX
B	12637	REVISED PER ECO	[illegible]	1/10/78	[illegible]

NOTES: 1. SEE 66300462 FOR PROPER USE OF EACH TAB.

2 MARK CDC PART NO. ON SMOOTH SIDE OF CABLE PER CDC SPEC 10121508.

APL 61407811

DETACHED LISTS

AA3180 REV. 8-71 PRINTED IN U.S.A.

CONTROL DATA	CODE IDENT 15920	SHEET 2	A	DOCUMENT NO. 61407811	REV. A

NOTE:
STANDOFFS AND LOCKING DEVICES ARE
NOT ASSEMBLED AT THIS LEVEL.

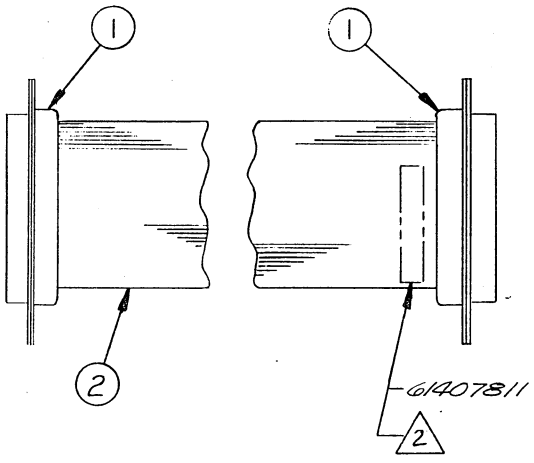

AA3185 PRINTED IN U.S.A.

		CODE IDENT	SHEET	WL	DOCUMENT NO.	REV.
		15920	3		61407811	A

CONDUCTOR IDENT.	FIND NO.	GAUGE (REF.)	COLOR (REF.)	LENGTH (APPROX) IN.	ORIGIN		ACCESS FIND NO.	DESTINATION		ACCESS FIND NO.	REMARKS
1	2	26	8	4	P01	01	1	P02	13	1	
2	2	26	8	4	P01	02		P02	12		
3					P01	03		P02	11		
4					P01	04		P02	10		
5					P01	05		P02	9		
6					P01	06		P02	8		
7					P01	07		P02	7		
8					P01	08		P02	6		
9					P01	09		P02	5		
10					P01	10		P02	4		
11					P01	11		P02	3		
12					P01	12		P02	2		
13					P01	13		P02	1		
14					P01	14		P02	25		
15					P01	15		P02	24		
16					P01	16		P02	23		
17					P01	17		P02	22		
18					P01	18		P02	21		
19	2	26	8	4	P01	19	1	P02	20	1	

AA3183 REV. 8/71 PRINTED IN U.S.A.

		CODE IDENT	SHEET	WL	DOCUMENT NO.	REV.
		15920	4		61407811	A

CONDUCTOR IDENT.	FIND NO.	GAUGE (REF.)	COLOR (REF.)	LENGTH (APPROX) IN.	ORIGIN		ACCESS FIND NO.	DESTINATION		ACCESS FIND NO.	REMARKS
20	2	26	8	4	P01	20	1	P02	19	1	
21	2	26			P01	21		P02	18		
22	2	26			P01	22		P02	17		
23	2	26			P01	23		P02	16		
24	2	26			P01	24		P02	15		
25	2	26	8	4	P01	25	1	P02	14	1	

AA3183 REV. 8/71 PRINTED IN U.S.A.

BUILD ARC 104

ASSEMBLY PARTS LIST

PRINT DATE	PAGE	FILE CHANGE NO.
11-28-77	1	00012637

DIV.	ASSEMBLY NUMBER	CD	REV.	DWG.	DESCRIPTION	MC	STATUS	STATUS DATE	ENG. RESP.	FILE DATE
0860	61407811	1	R	A	ADAPTER CABLE ASSY	A	REL	08-12-77		11-28-77

T	FIND NO	LI	PART NUMBER	CD	M	QUANTITY	U/M	PART DESCRIPTION	MC	YLD	ECO. NO. IN	ECO. NO. OUT	S/N	WK IN	WK OUT
	001	01	51916925	4		2	PC	CONN 25 PIN	P						
	002	01	65832242	5		333	FT	CBL SLAT 25 CONDCT 28AWG FB	W						
	003	01	51875323	1		2	PC	STDOFF M-F HEX BRS 4-40X3	B						
	004	01	94288024	6		2	PC	LKG DEVICE, CONN TYP 4 W/TYP3	P						
	005	01	66304317	2		REF	PC	CONVERTER INSTALLATION INST	D						
	006	01	66300462	0		REF	PC	ADAPTER MATRIX	D						
								0006 TOTAL LINES							

DWN E. GRONO 7/1/77	CONTROL DATA	TITLE ADAPTER CABLE ASSY		PREFIX A	DOCUMENT NO. 61407812	REV B
CHKD						
ENG						
MFG		FIRST USED ON CC6B1A-B		NHA 15620600	SHEET 1 OF 3	
APPR	CODE IDENT 15920					

SHEET REVISION STATUS

4	3	2	1
A	A	A	A
	A	A	B

REVISION RECORD

REV	ECO	DESCRIPTION	DRFT	DATE	APP
A	12402-3	RELEASED CLASS A		8-12-77	MCK
B	12637	REVISED PER ECO		11/9/78	MJO

NOTES: 1. SEE 66300462 FOR PROPER USE OF EACH TAB.
2. APPLY LABEL TO CABLE PER DRAWING 82191061, METHOD 5.
3. APPLY LABEL TO CABLE PER CDC SPEC 1.30.808.
4. CABLE TIE FURNISHED WITH CONNECTOR.

APL 61407812

DETACHED LISTS

AA114C REV. B 77

PRINTED IN U.S.A.

	CODE IDENT	SHEET		DOCUMENT NO.	REV.
	15920	2	A	61407812	A

NOTE:
1. CLIP SHIELD BACK.
2. CLIP ALL UNUSED WIRES BACK TO CABLE INSULATION.
3. CRIMP PINS AND SOCKETS WITH ITT CANNON CCT-DC-1.

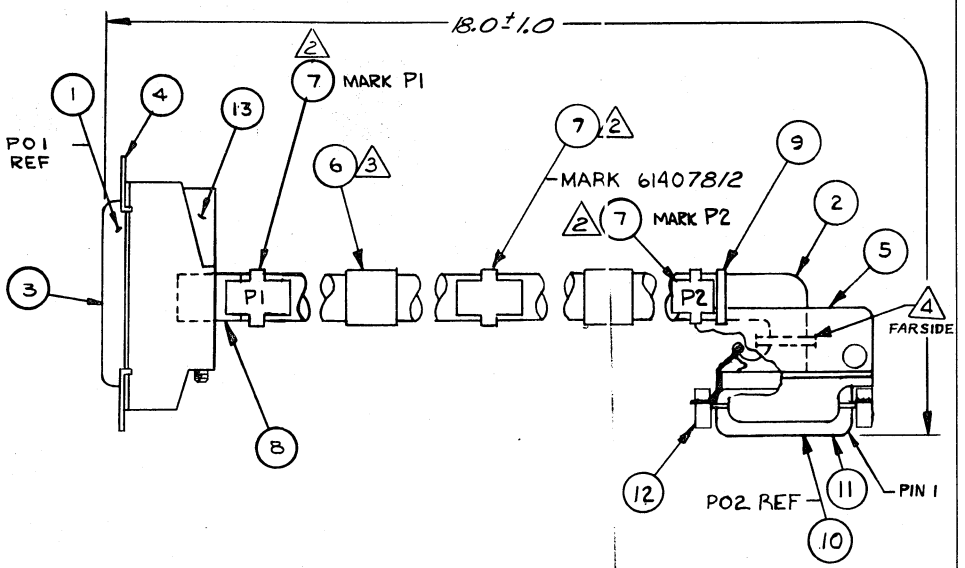

AA3185

PRINTED IN U.S.A.

CONTROL DATA		CODE IDENT	SHEET	WL	DOCUMENT NO.	REV.
		15920	3		61407812	A

CONDUCTOR IDENT.	FIND NO.	GAUGE (REF.)	COLOR (REF.)	LENGTH (APPROX)	ORIGIN		ACCESS FIND NO.	DESTINATION		ACCESS FIND NO.	REMARKS
1	2		GRN	18	P01	01		P02	01		CHASSIS GND
2	2		RED	18	P01	02		P02	03		DATA
3	2		YEL	18	P01	05		P02	11		CTS-REV CHANNEL
4	2		BRN	18	P01	07		P02	07		LOGIC GND
5	2		BLU	18	P01	20		P02	06		DTR - DSR

AA3183 REV. 8/71

PRINTED IN U.S.A.

BUILD ARC 104

ASSEMBLY PARTS LIST

PRINT DATE	PAGE	FILE CHANGE NO.
08-15-77	1	~~[illegible]~~ 12637

DIV.	ASSEMBLY NUMBER	CD	REV.	DWG.	DESCRIPTION	MC	STATUS	STATUS DATE	ENG. RESP.	FILE DATE
0860	61407812	9	B	A	ADAPTER CABLE ASSY	A	REL	08-12-77		08-15-77

T	FIND NO	LI	PART NUMBER	CD	M	QUANTITY		U/M	PART DESCRIPTION	MC	YLD	ECO. NO. IN	ECO. NO. OUT	S/N	WK IN	WK OUT
	001	01	53397814	4		1		PC	CONN, MALE 25POSN PLUG ALONE	P						
	002	01	~~51908500~~ 51908501	5		1	500	FT	CBL, SHLD FIG 1 25 CNDCT 300V	W		12637	12637			
	003	01	53397817	7		5		PC	CONTACT, STRIP PINS 20-24GA	P						
	004	01	51853900	2		1		PC	LATCH ASSY(CONNECTOR-PAIR)	P						
	005	01	51908402	4		1		PC	CONN HOOD, .430/.390 CBL DIA	P						
	006	01	10123821	0		2		PC	LABEL, CRL MK (CDC 12 RVLOPS)	B						
	007	01	94277407	6		3		PC	STRAP CABLE TIE TYPE 4	B						
	008	01	24528606	7			200	FT	TBG, INSUL NO.17 BLK UL PVC	B						
	009	01	94277400	1		1		PC	STRAP CABLE TIE TYPE 1	B						
	010	01	53397914	2		1		PC	CONN, FEM 25POSN PLUG ALONE	P						
	011	01	53397917	5		5		PC	CONTACT, STRIP SKT 20-24GA	P						
	012	01	94288024	6		2		PC	LKG DEVICE, CONN TYP 4 W/TYP3	P						
	013	01	51784302	5		1		PC	CABLE CLAMP 25 POS	P						
	014	01	66300462	0		REF		PC	ADAPTER MATRIX	D						
									0014 TOTAL LINES							

WIRE LISTS 8

This section title page is included to maintain format compatibility for this type of manual.

Appendix A contains character sets and symbol code listings and dot matrix symbol formations.

The display keyboard alphanumeric character set, dot matrix formations with octal codes, and control code dot matrix formations are shown in table A-1, figure A-1, and figure A-2 respectively.

TABLE A-1. DISPLAY KEYBOARD ALPHANUMERIC CHARACTER SET

UPPERCASE SYMBOLS	A B C D E F G H I J K L M N O P Q R S T U V W X Y Z		
LOWERCASE SYMBOLS◆	a b c d e f g h i j k l m n o p q r s t u v w x y z		
NUMERALS	0 1 2 3 4 5 6 7 8 9		
CHARACTER	NAME	CHARACTER	NAME
	Space (Nonprinting)	;	Semicolon
!	Exclamation Point	<	Less Than
"	Quotation Marks (Diaeresis)	=	Equals
#	Number Sign	>	Greater Than
$	Dollar Sign	?	Question Mark
%	Percent	@	Commercial At
&	Ampersand	[	Opening Bracket
'	Apostrophe (Acute Accent)	\	Reverse Slant
(	Opening Parenthesis	]	Closing Bracket
)	Closing Parenthesis	^	Circumflex
*	Asterisk	_	Underline
+	Plus	◆ ¦	Vertical Line
,	Comma (Cedilla)	◆ `	Grave Accent
-	Hyphen (Minus)	◆ {	Opening Brace
.	Period (Decimal Point)	◆ }	Closing Brace
/	Slant	◆ ~	Equivalent or Similar
:	Colon	■	Parity Error (Rubout)

◆ These characters are not available for keyboard entry when the display's 96/64 character set switch is in 64 position.

00849-2

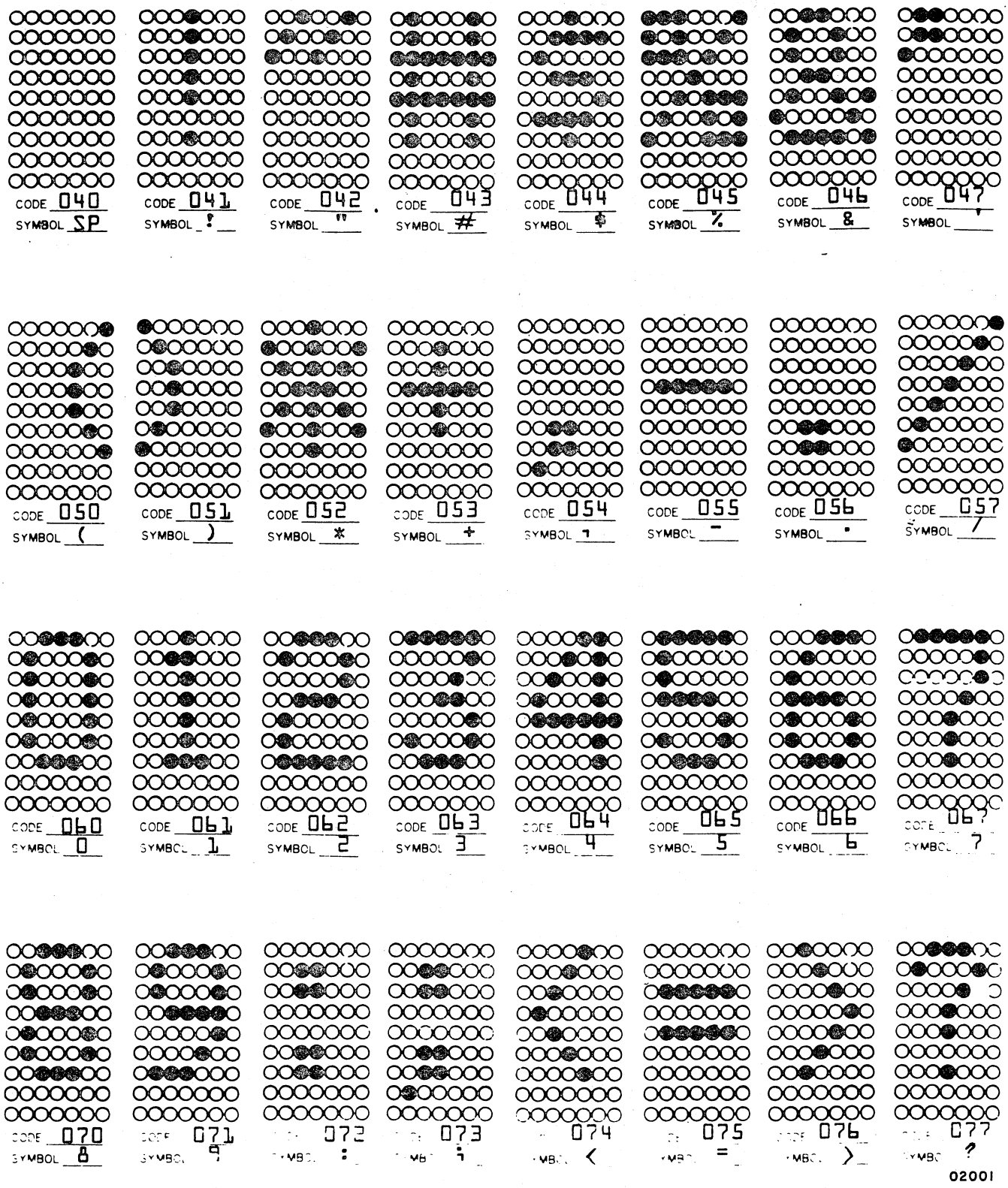

Figure A-1. Alphanumeric Dot Matrix Formations and Octal Codes (Sheet 1 of 3)

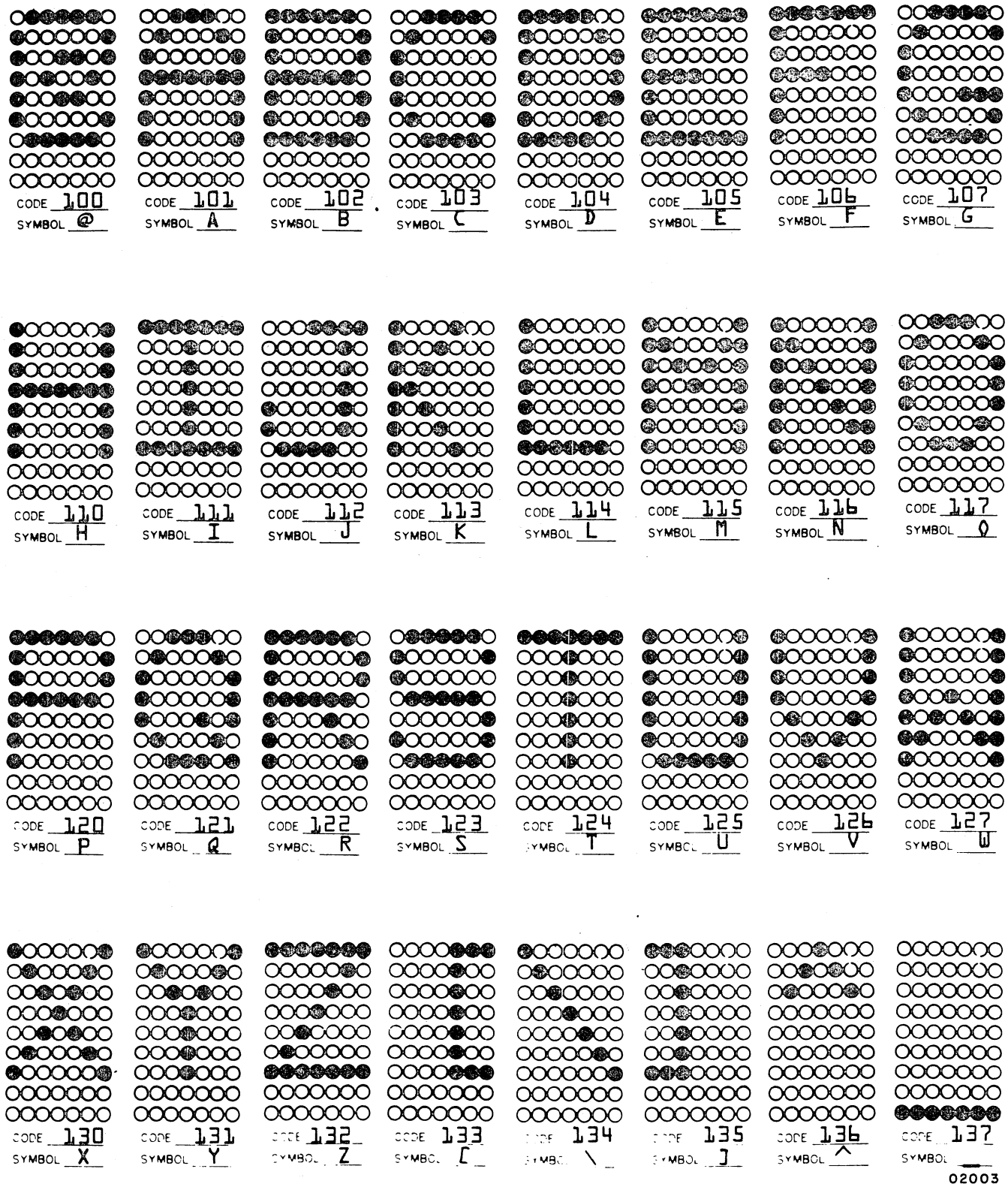

Figure A-1. Alphanumeric Dot Matrix Formations and Octal Codes (Sheet 2 of 2)

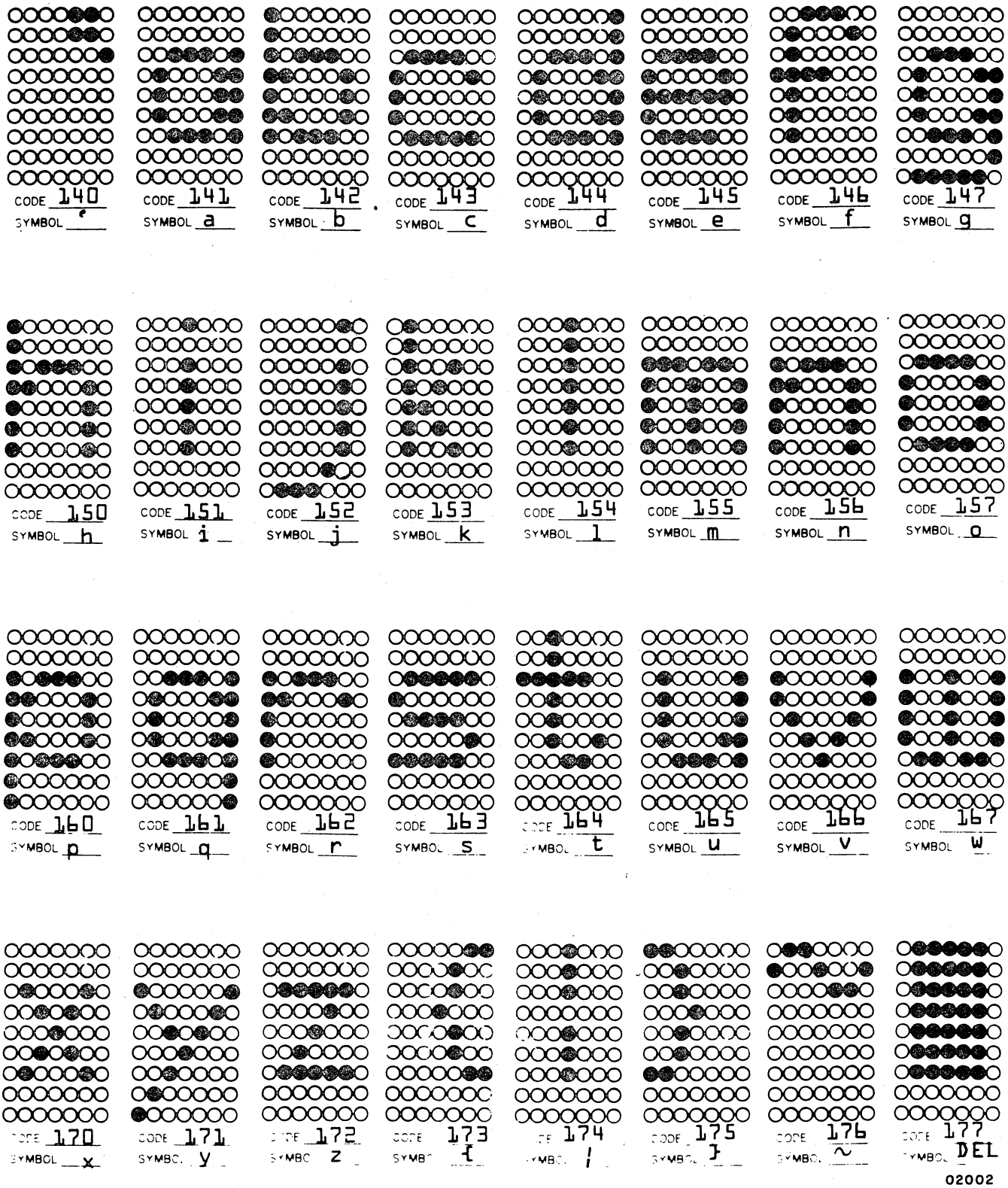

Figure A-1. Alphanumeric Dot Matrix Formations and Octal Codes (Sheet 3 of 3)

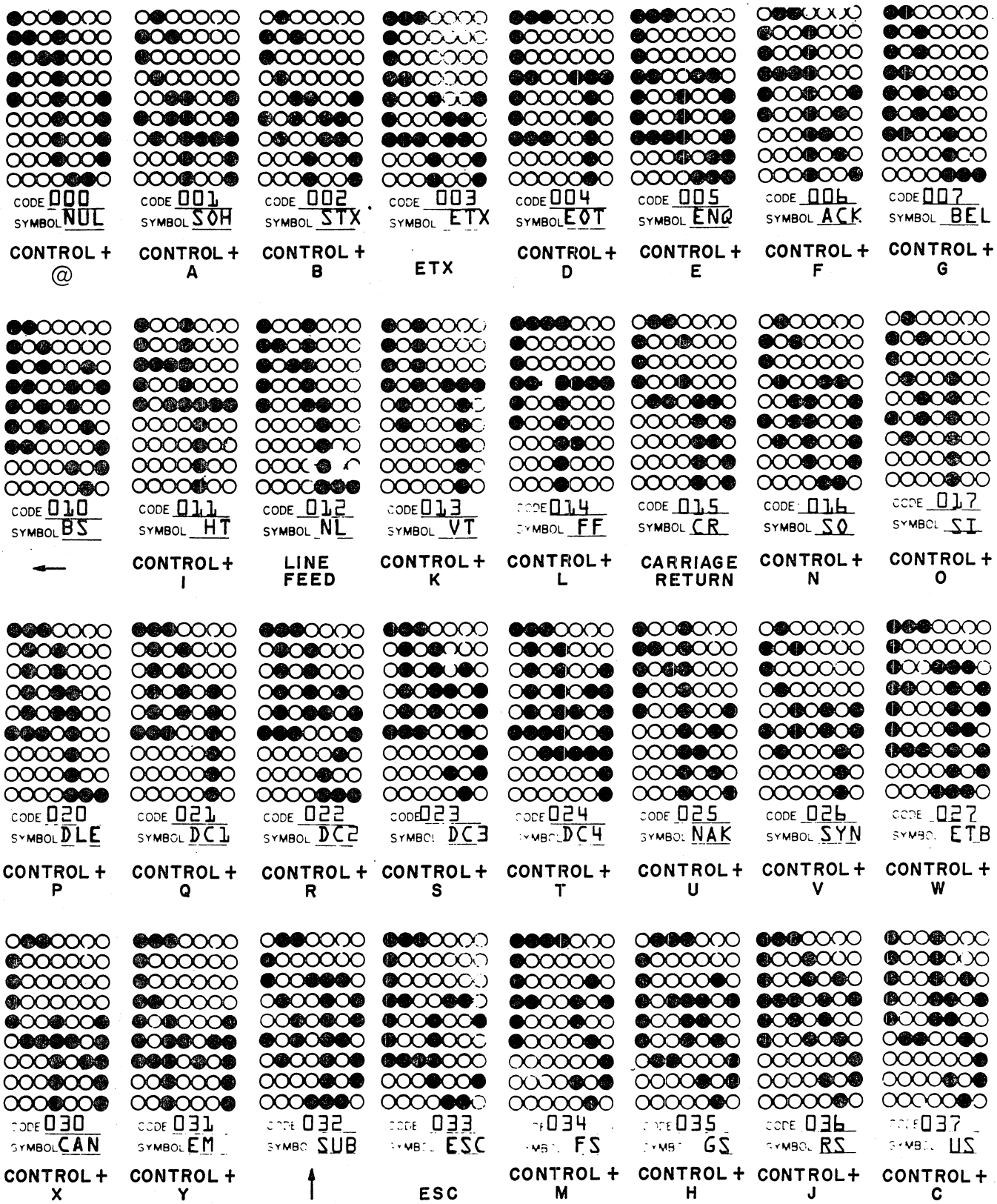

NOTE: ASCII delete code (DEL) is listed with preceding alphanumeric codes (see 177_8).

Figure A-2. Control Code Dot Matrix Formations and Octal Codes

The nonimpact printer character set and character repertoire and the impact printer character repertoire are shown in table A-2, figure A-3, and figure A-4 respectively.

TABLE A-2. NONIMPACT ALPHANUMERIC CHARACTER SET

UPPERCASE SYMBOLS	A B C D E F G H I J K L M N O P Q R S T U V W X Y Z		
LOWERCASE SYMBOLS ♦	a b c d e f g h i j k l m n o p q r s t u v w x y z		
NUMERALS	0 1 2 3 4 5 6 7 8 9		
CHARACTER	NAME	CHARACTER	NAME
	Space (Nonprinting)	;	Semicolon
!	Exclamation Point	<	Less Than
"	Quotation Marks (Diaeresis)	=	Equals
#	Number Sign	>	Greater Than
$	Dollar Sign	?	Question Mark
%	Percent	@	Commercial At
&	Ampersand	[	Opening Bracket
'	Apostrophe (Acute Accent)	\	Reverse Slant
(	Opening Parenthesis	]	Closing Bracket
)	Closing Parenthesis	♦♦ ↑	Up Arrow
♦ *	Asterisk	♦♦ ←	Left Arrow
+	Plus	`	Grave Accent
,	Comma (Cedilla)	{	Opening Brace
-	Hyphen (Minus)	¦	Vertical Line
.	Period (Decimal Point)	}	Closing Brace
/	Slant	~	Equivalent (Overline)
:	Colon	♦♦	Space for Parity Error

♦ Characters differing slightly from those of display character set.

♦♦ Characters completely different from those in display character set.

00849-3

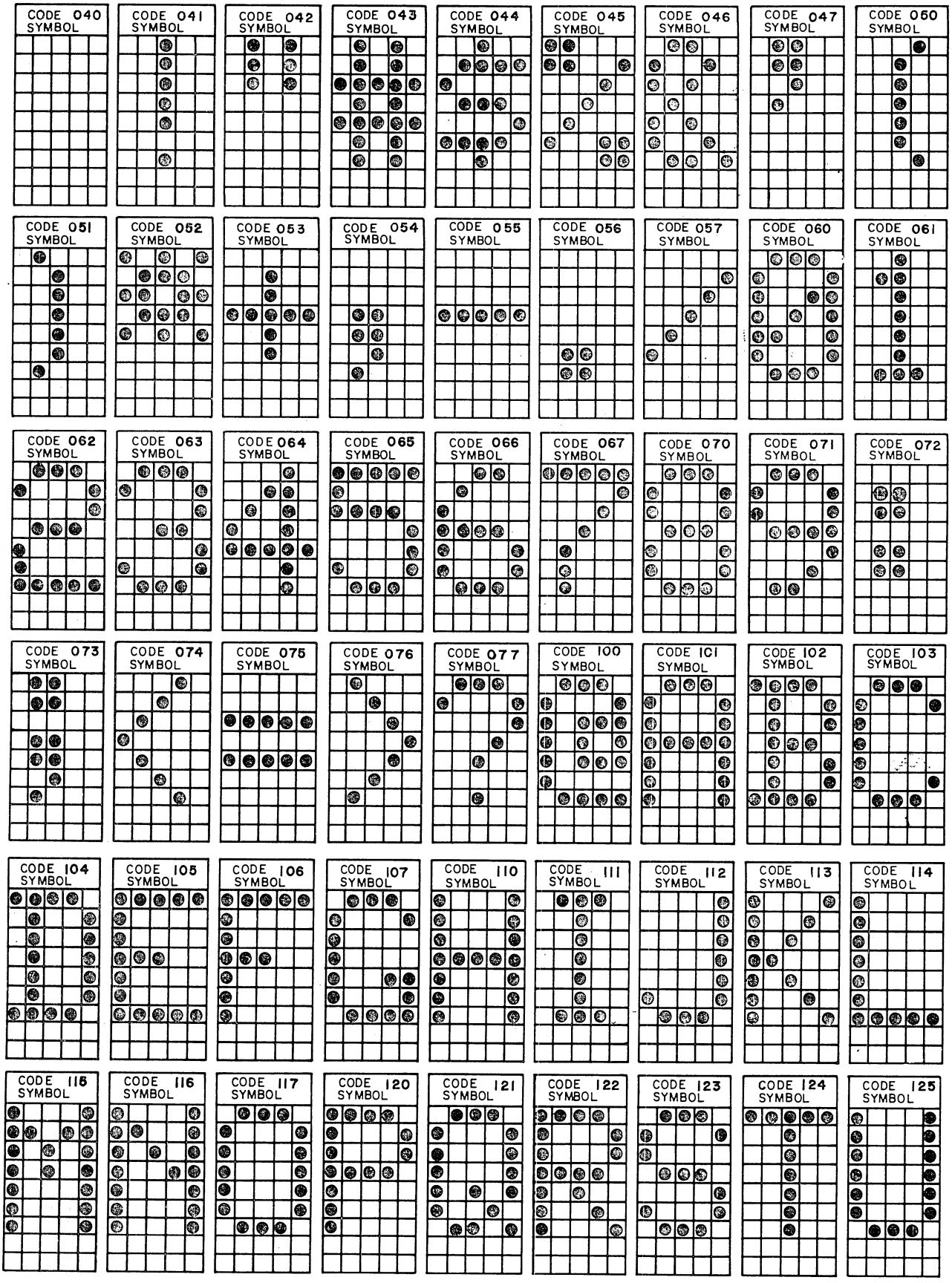

Figure A-3. Nonimpact Printer Character Repertoire (Sheet 1 of 2)

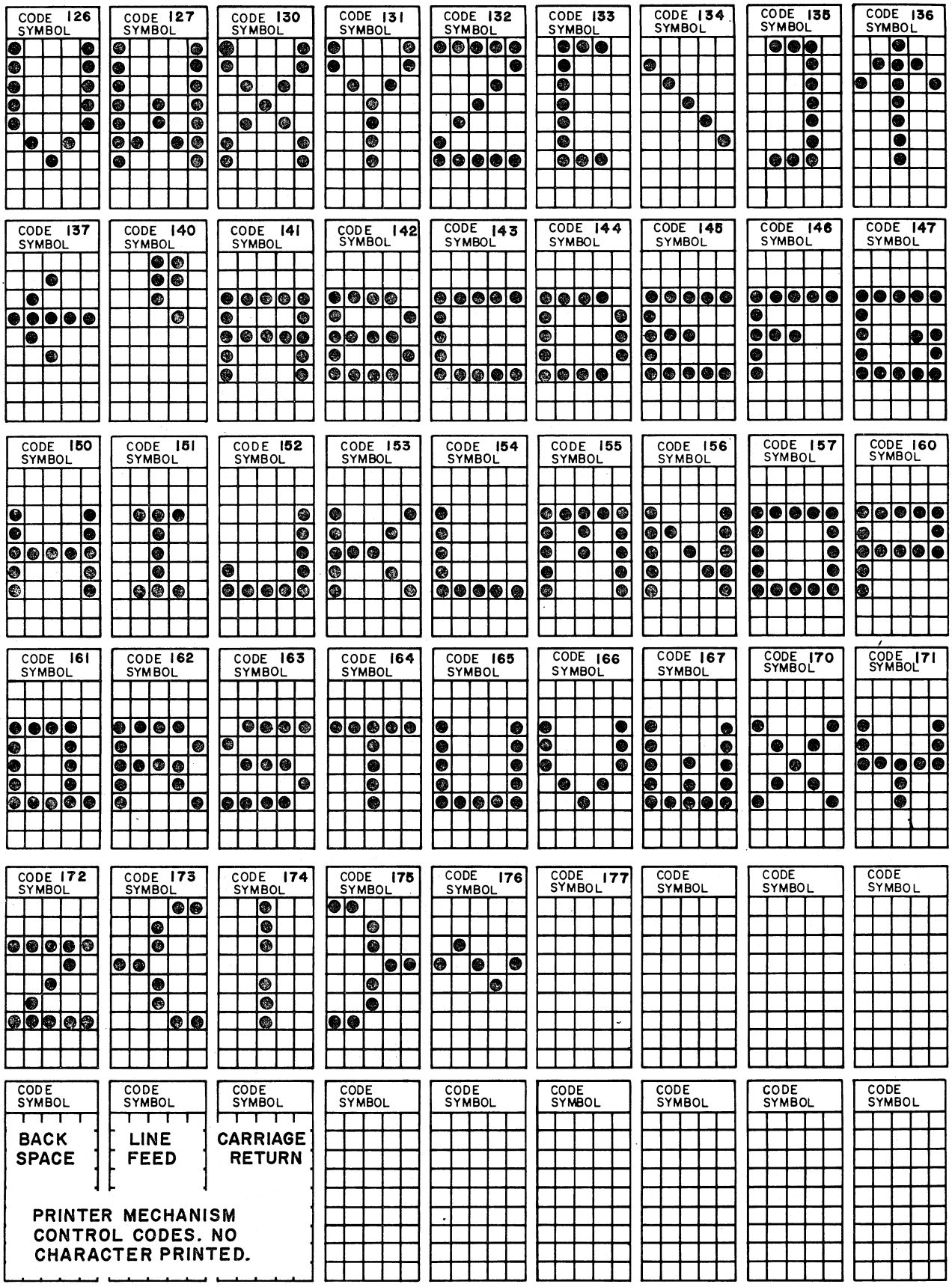

Figure A-3. Nonimpact Printer Character Repertoire (Sheet 2 of 2)

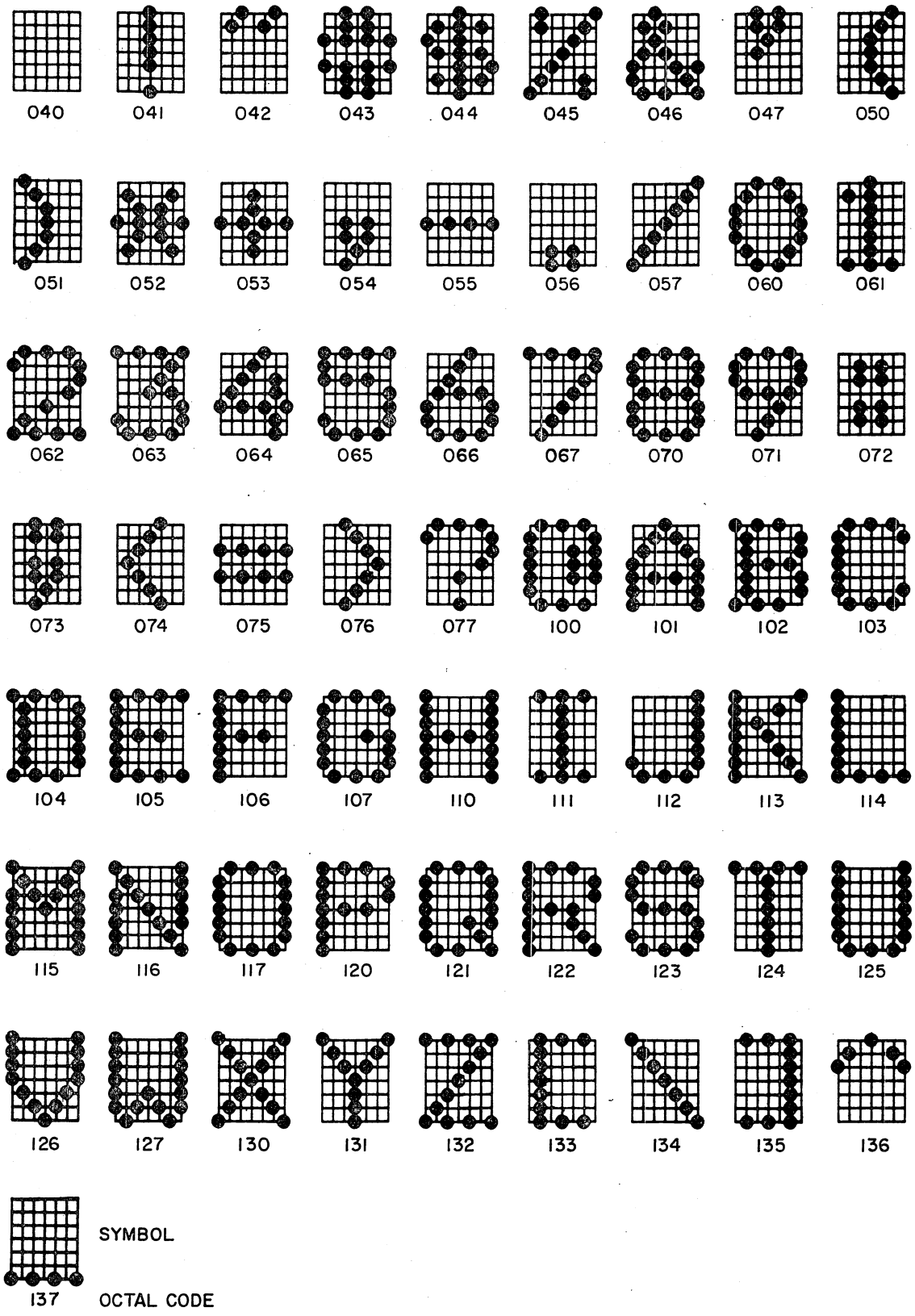

Figure A-4. Impact Printer Character Repertoire (Sheet 1 of 2)

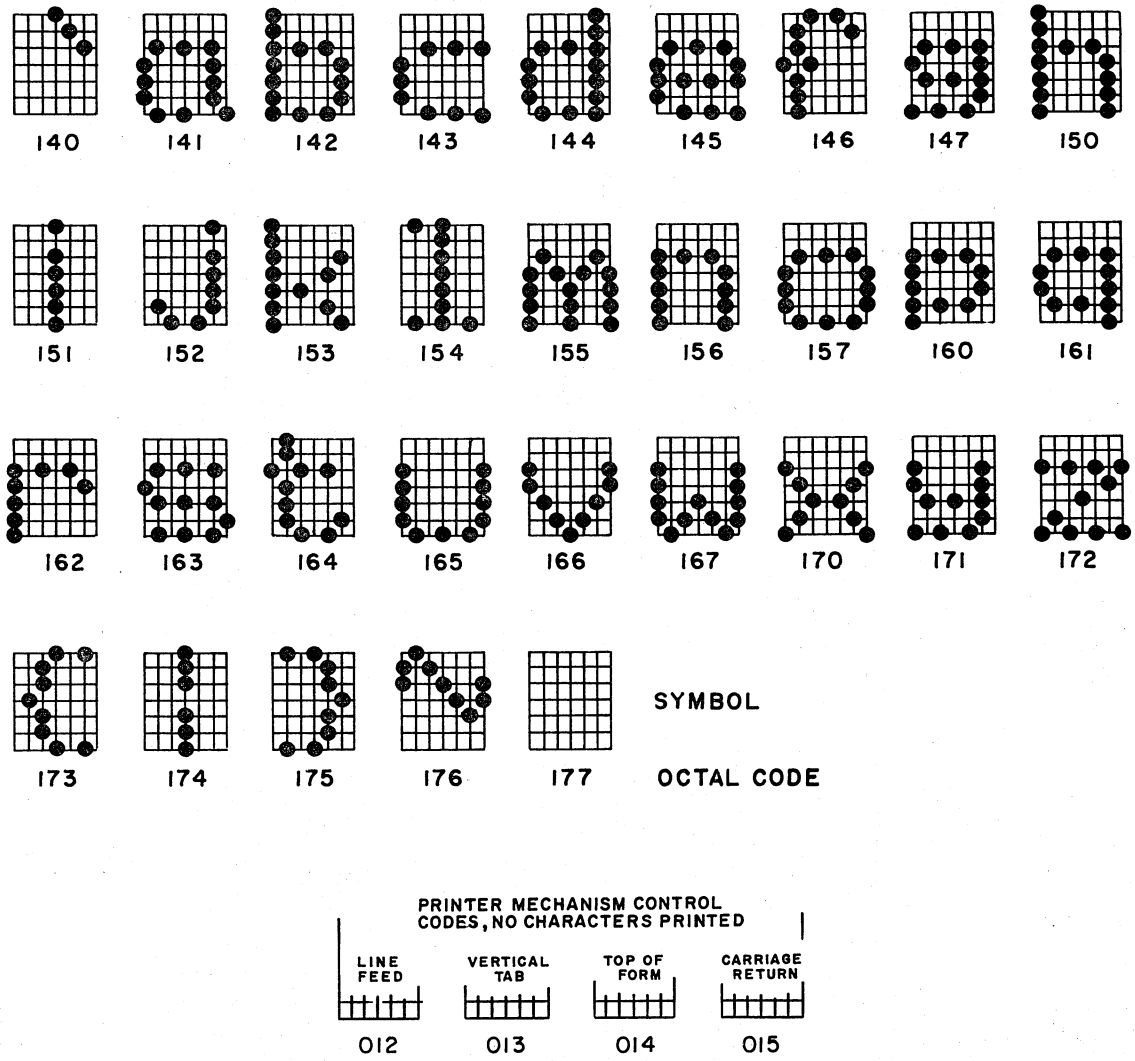

Figure A-4. Impact Printer Character Repertoire (Sheet 2 of 2)

MOS CIRCUIT PRECAUTIONS B

This appendix contains MOS circuit handling precautions.

Integrated circuits consisting of MOS (metal-oxide semiconductor) elements are susceptible to unrepairable damage if exposed to excessive static electricity. Since such excess charge can be easily built up on and carried by the person servicing the equipment which contains MOS circuits, certain MOS circuit handling precautions must be followed. The terminal subsystem contains a variety of MOS circuits throughout (ROM chips, receiver/transmitter chips, static shift register, etc.) so, rather than identify each of the many MOS circuits for special handling, it is safest to follow MOS circuit handling precautions at all times when performing installation, checkout, or any maintenance. The precautions to observe are as follows.

1) Never insert, install, remove, replace, or otherwise connect/disconnect any circuit(s) within the terminal subsystem with primary power applied to any of the cabinets and/or equipments within the subsystem. Power off for the cabinet being worked on is not sufficient. An interface adapter module, powered within another cabinet, may be supplying signals to the bus or backplane of the cabinet in which you are installing/removing a MOS circuit. This may be sufficient to damage the MOS circuits upon initial contact with the powered circuit.

WARNING

When observing static grounding precautions, do not touch powered-on electrical equipment and chassis frame at the same time.

2) Before touching, grasping, or handling any circuit, connector, cable, or bus/backplane - always touch hand(s) to an exposed portion of the associated chassis frame to equalize potentials (bleed off any possible static charge from your hands onto the ground-level chassis).

3) Especially in dry ambient air, any movement may cause static electricity build-up due to friction. In the case of shuffling one's feet across a dry carpet, such charge may be quite high and may easily jump from a cable connector being held onto the pins being mated to on an equipment. This could damage the MOS circuits within the equipment. Thus, the chassis frame must always be touched immediately before connecting any cable to it.

4) When removing, replacing, or otherwise handling any assembly/module which contains MOS circuits, do not touch circuit paths or conductors if at all possible. Do not carry a MOS circuit assembly across a room while touching its circuits.

5) When a module is out of its chassis, if it is to lay somewhere where it may be touched, if it is to be carried to some other location, or if it is to be shipped, always try to keep it in a special conductive bag or other approved MOS circuits protective container/wrapping.

If shipping the video monitor (5BVD) printed circuit board, use only the special shipping container, part number 41037700, designed especially for this task. This special container eliminates improper packaging of the video board which, when shipped, would damage the horizontal width adjustment coil. To return a video monitor board in the special container, place the board inside the container, component side down, with the horizontal width adjustment coil in the hole in the center of the foam. See figure B-1. The special shipping container, part number 41037700, can be obtained from the nearest Control Data representative or:

Control Data Corporation
Corporate Traffic
8100 34th Avenue South
Minneapolis, Minnesota 55440

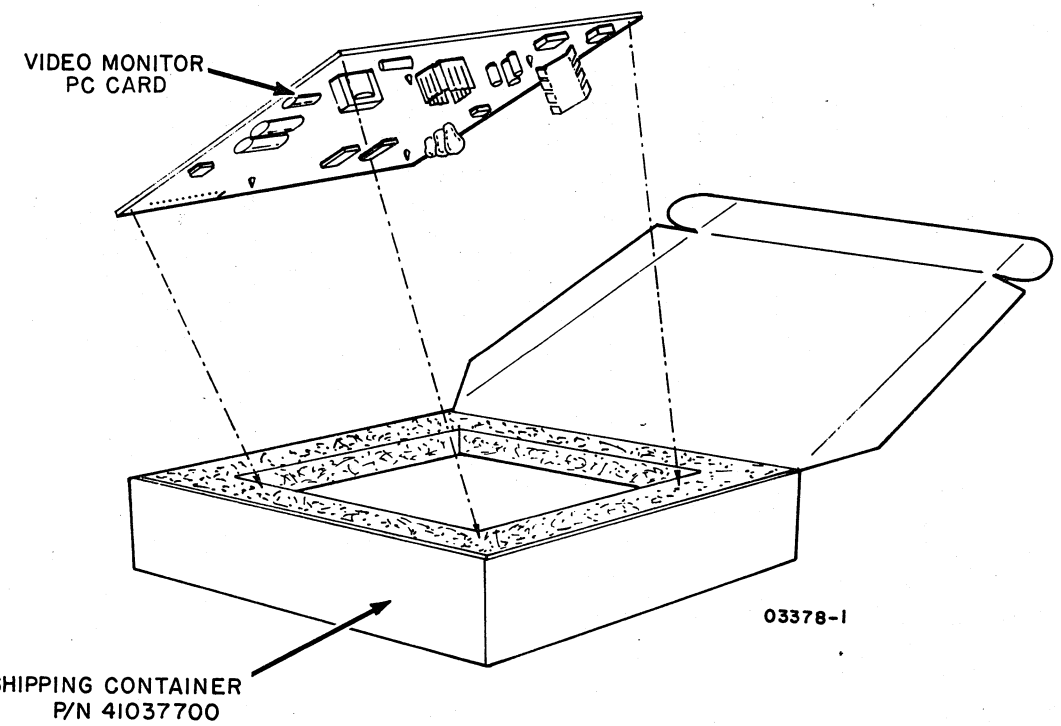

Figure B-1. Video Monitor PC Board Packaging

KEYBOARD DISPLAY TERMINALS FOR SERIES/1 SYSTEMS

C

This appendix provides information on keyboard display terminals that are compatible with IBM* Series/1 systems. The format of this appendix follows the breakdown of the informational sections of the main body of the manual:

- General description
- Theory of operation
- Diagrams
- Maintenance
- Parts data

GENERAL DESCRIPTION

The variations on the basic keyboard display terminal which provide a terminal compatible with Series/1 systems are outlined in table C-1.

TABLE C-1. SERIES/1-COMPATIBLE TERMINAL CONFIGURATIONS

TERMINAL TYPE	60 HZ	50 HZ	CURRENT LOOP	FTZ SHIELDING	SELECTABLE STOP BITS	SUGGESTED KEYBOARD
80752-30 (CC555-L)	X	–	–	–	X	CA150E*
80752-31 (CC555-M)	X	–	X	–	X	CA150E*

* The keyboard is available as separate equipment.

The general functions, features, and equipment specifications provided under General Description in the main body of this manual apply to the Series/1-compatible terminals with only the exceptions and additions noted under the sections Display Unit and Keyboard, which follow in this appendix.

---

* IBM is a trademark of International Business Machines Corporation.

DISPLAY UNIT

The display unit enclosure for the Series/1-compatible terminals is painted with white vinyl rather than gold vinyl. The display unit contains a selectable stop-bit switch and, if provided with current loop, has a current-loop feature compatible with the Series/1 current-loop communications interface (teletypewriter adapter). If configured for voltage level communication, the display unit interfaces with the Series/1 RS-232-C local or remote interface*.

KEYBOARD

Refer to section 1 for a description of the suggested keyboard. The keyboard differs from those described in section 1 only in color.

THEORY OF OPERATION

The descriptions for the five functional assemblies (keyboard, display, control-logic module, rear panel, and power supply) provided in section 4 of this manual, apply also to the Series/1-compatible display units.

DIAGRAMS

The introduction, facing-page descriptions, logic diagrams, and other diagrams in section 5 of this manual are also applicable to the Series/1-compatible terminals except for certain pages of the logic diagrams. The pages in the logic set that differ in the logic set for the Series/1-compatible terminals are found in this section along with necessary facing-page description changes to explain the differences. To create a logic set for the Series/1-compatible terminals, substitute these diagrams for the same diagrams in the logic set in section 5 and make the corrections or additions indicated in the facing-page descriptions.

In addition to logic diagrams with differences, the schematic diagram for the 6CTD-1 printed-circuit module is provided here.

---

* The following are the IBM attachment boards: single line communication adapter, four or eight line communication adapter, teletypewriter adapter (RS-232-C or current loop), and asynchronous local attachment feature.

SHEET NO	CROSS REFERENCE NUMBER	MODULE LOCATION	REV	LOGIC DIAGRAM TITLE
1			E	LOGIC DIAGRAM CONTENTS SHEET
2			A	KEY TO DIAGRAMS-PHYSICAL LOCATION CODES
3			A	KEY TO SYMBOLS
4	100		D	MAIN TIMING, HORIZONTAL, SCAN, AND VERTICAL COUNTER
5	101		D	HORIZONTAL AND VERTICAL CONTROL, VERTICAL ADDRESS COUNTER, READ/WRITE CONTROL
6	102		E	MEMORY OUTPUT LATCH, CHARACTER GENERATOR, VIDEO SERIALIZER, BLINK COUNTER, DISPLAY CURSOR F/F
7	103		C	"Y" CURSOR COUNTER AND MUX, VIDEO DRIVER CIRCUIT
8	104		A	CURSOR FUNCTION DECODE, CURSOR POSITION DECODE, LAST LINE COUNTER
9	105		A	UART, "X" COMPARE, CURSOR COMPARE
10	106		A	MEMORY BANK "A"
11	107		A	MEMORY BANK "B"
12	108		A	CLEAR CONTROL, RECEIVE AND KEYBOARD CONTROL
13	109		B	MEMORY ADDRESS CONVERSION, DATA DECODE
14	110		A	BAUD COUNTER, MODEM CONTROL
15	111		C	PHASE LOCK OSCILLATOR CURRENT LOOP RECEIVE AND TRANSMIT
16	112		A	INTERNAL SWITCHES, BREAK AND ALARM LAST LINE COMPARE
17	113		B	X CURSOR CONTROL, Y CURSOR CONTROL, X CURSOR COUNTER
18	114		C	MODEM INTERFACE, RTS CONTROL
19	115		A	BAUD SELECT, X/Y POSITION CONTROL
20			A	TIMING DIAGRAM
21			A	TIMING DIAGRAM
22			A	TIMING DIAGRAM
23			A	BLOCK DIAGRAM
24			C	FILTER CAPACITORS AND SPARES

REVISION RECORD

REV	CO	DESCRIPTION	DRFT	DATE	CHKD	APP
A	12490-22	RELEASED CLASS 'A'	/	10-2-78	/	MEK
B	13218	REVISED PER ECO	RH	11-17-78	WJG	
C	13344	REVISED PER ECO	EE	6/15/79	EEF	
D	13581	REVISED PER ECO	WJG	7-13-79	WJG	
E	14566	CHG EL CHIP DESIGNATION	WJG	3-9-81	WJG	

SHEET REVISION STATUS

TITLE: LOGIC DIAGRAM CONTENTS SHEET

CODE IDENT	15920	
DRAWING NO	62201025	REV C
SCALE		SHEET 1 OF 24
CROSS REF NO		

IN-SOL DATA

FIRST USED ON	CC555L,M	
DWN	E. ERSFELD	10-2-78
CHKD		10/2/78
ENGR		10-5-78
MFG		10/9/78
APPR		10 11 78

REFERENCE DRAWING

COMPONENTS, EXCEPT AS NOTED

	TOLERANCE	VALUE	RATING
RES			
CAP			

NOTES:
1. FOR LOGIC CHIP INFORMATION SEE DWG. 82297000 (KEY TO SYMBOLS).

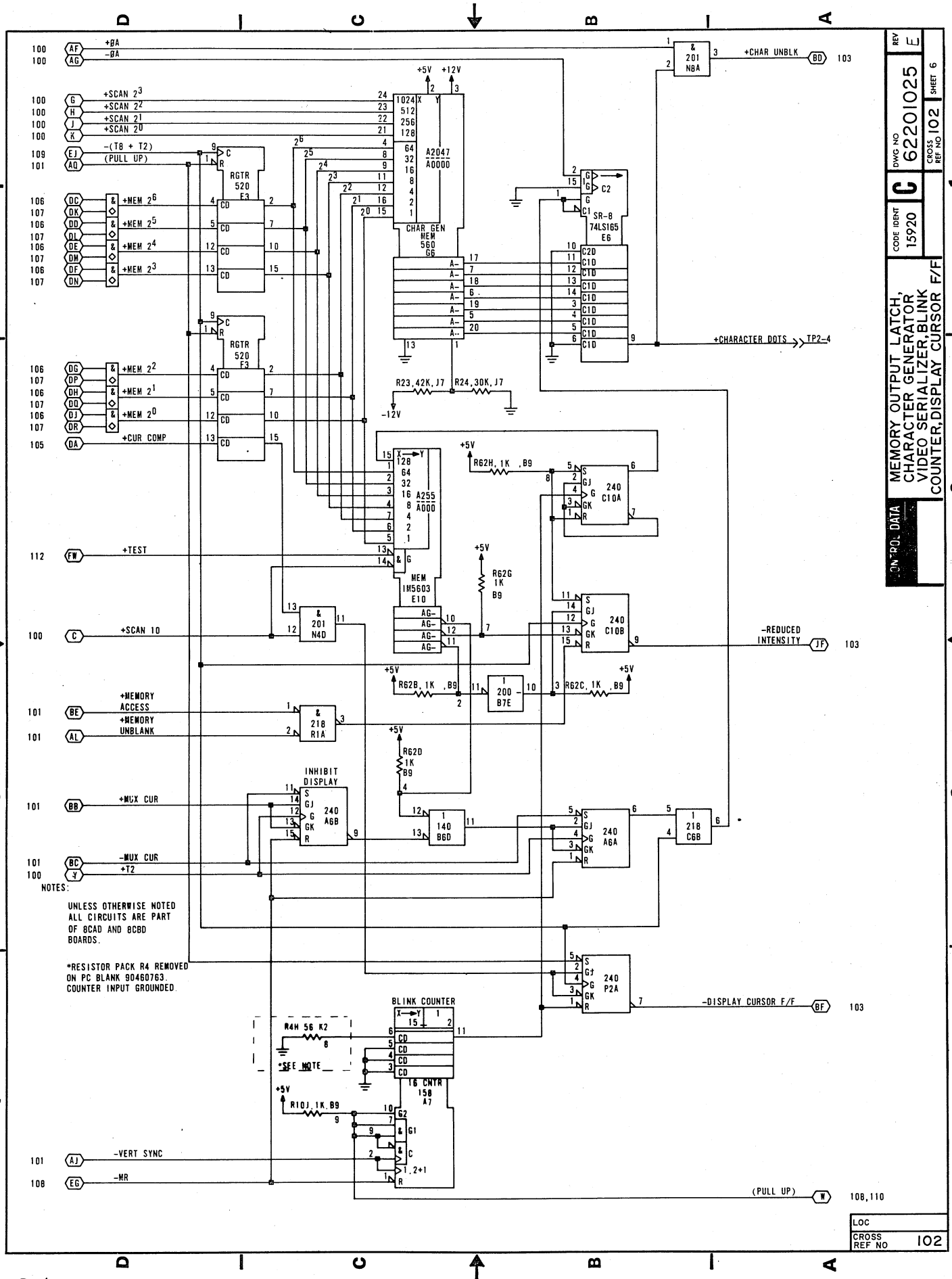
MEMORY OUTPUT LATCH, CHARACTER GENERATOR VIDEO SERIALIZER, BLINK COUNTER, DISPLAY CURSOR F/F
CONTROL DATA
CODE IDENT 15920
C
DWG NO 62201025
REV E
CROSS REF NO 102
SHEET 6
+ØA
-ØA
+SCAN 2^3
+SCAN 2^2
+SCAN 2^1
+SCAN 2^0
-(T8 + T2)
(PULL UP)
+MEM 2^6
+MEM 2^5
+MEM 2^4
+MEM 2^3
+MEM 2^2
+MEM 2^1
+MEM 2^0
+CUR COMP
+TEST
+SCAN 10
+MEMORY ACCESS
+MEMORY UNBLANK
+MUX CUR
-MUX CUR
+T2
-VERT SYNC
-MR
+CHAR UNBLK
+CHARACTER DOTS
TP2-4
-REDUCED INTENSITY
-DISPLAY CURSOR F/F
(PULL UP)
RGTR 520 F3
CHAR GEN MEM 560 G6
A2047 A0000
SR-8 74LS165 E6
A255 A000
MEM 1M5603 E10
R23,42K,J7
R24,30K,J7
R62H,1K,B9
R62G 1K B9
R62B,1K,B9
R62C,1K,B9
R62D 1K B9
INHIBIT DISPLAY
BLINK COUNTER
16 CNTR 158 A7
R4H 56 K2
*SEE NOTE
R10J,1K,B9
NOTES:
UNLESS OTHERWISE NOTED ALL CIRCUITS ARE PART OF 8CAD AND 8CBD BOARDS.
*RESISTOR PACK R4 REMOVED ON PC BLANK 90460763. COUNTER INPUT GROUNDED.
LOC
CROSS REF NO 102

62957400 J

PHYSICAL LOCATION CODES OF THE 156 PACKAGE MODULE

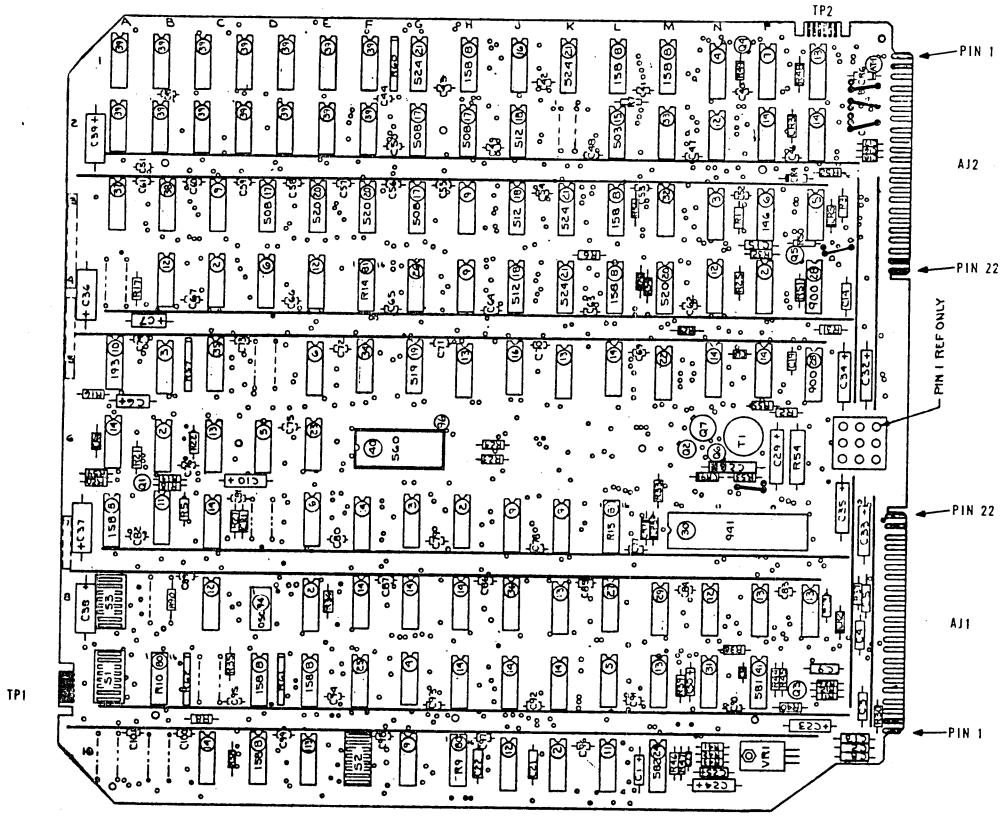

POWER AND GROUND PINS

+12V	AJ3-
+5V	AJ3-
	AJ3-
	AJ2-22
	AJ1-22
-12V	AJ3-
	AJ3-19
GND	AJ3-
	AJ3-
	AJ2-21
	AJ2-18
	AJ1-21
	AJ1-20

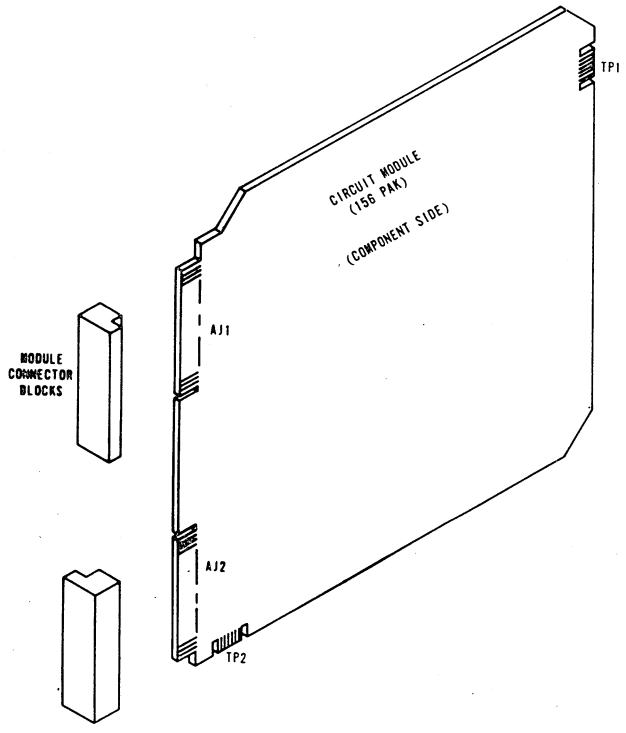

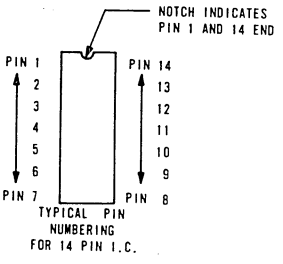

DIAGRAM 105

UART, "X" COMPARE, CURSOR COMPARE

Change the description for pin 36 to read as follows:

Pin 36 (2 Stop Bits) goes high when switch S3 is open to enable two stop bits to be added to transmitted words; it goes low when switch S3 is closed to enable only one stop bit to be added to transmitted words.

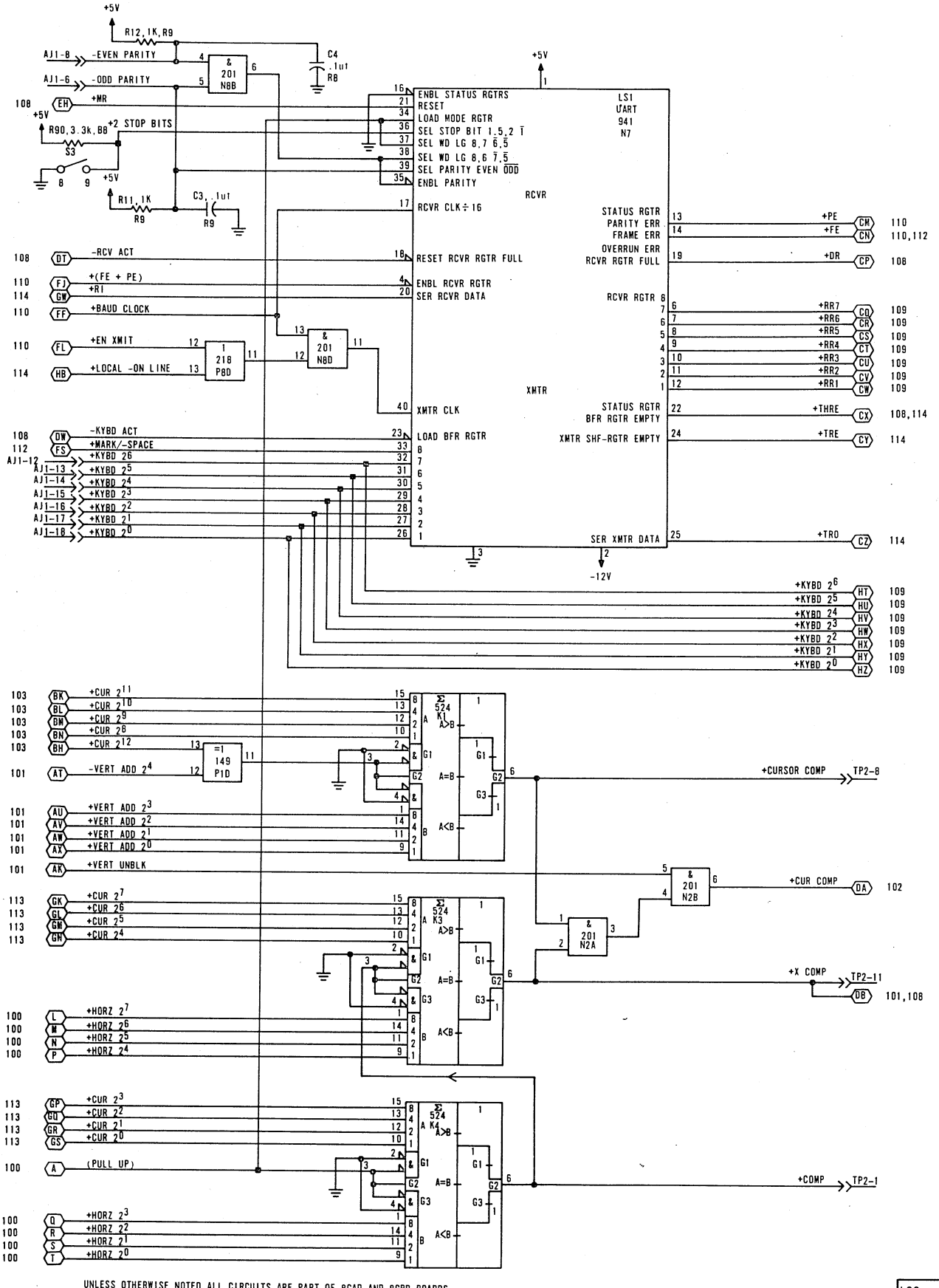

UNLESS OTHERWISE NOTED ALL CIRCUITS ARE PART OF 8CAD AND 8CBD BOARDS.

REV A
DWG NO 62201025
SHEET 9
CODE IDENT 15920
C
CROSS REF NO 105
UART, "X" COMPARE, CURSOR COMPARE
CONTROL DATA

LOC
CROSS REF NO 105

DIAGRAM 111

PHASE LOCK OSCILLATOR, CURRENT LOOP RECEIVE AND TRANSMIT

The changes required in the facing-page description for diagram 111 are minor and all occur in the first three paragraphs following the heading Current Loop Transmit and Receive Circuits. The first change occurs in the sentence beginning: Full-duplex current loop operation.... Compare the following paragraphs to those existing for diagram 111 in the main body of this manual. The differences are underlined.

Full-duplex current loop operation of the display terminal requires the following connections: A to C, J to D to G to E, and H to L. (Sentence removed.) The following text describes the operation of the current loop transmit and receive circuits when connected for a full-duplex current-loop channel. (Sentence removed.)

The current-loop transmit circuit normally receives high -TRO·ON LN and -XMIT BREAK signals via N2C and a pulsing +HORZ 2^0 signal via gate R3. The signals to N2C block R3 so that its output stays low. The low output from R3 holds Q7 of the pulse transformer off so that the pulse transformer does not produce an output. The external system passes current to the transmit circuit via AJ2-16 and biases Q6 and Q2 to turn on. When Q2 is on, it bypasses R33 and provides a return path for the external system current via jumper J-H to ground. With current flowing in the loop in this manner, the transmit loop is in a quiescent marking condition (idle loop). When data is transmitted, the -TRO·ON LN signal line pulses high (mark) and low (space) to reflect the state of the data bits composing a transmit word. As -TRO·ON LN goes low to signify a space bit, it causes N2C-8 to go low and enable gate R3. R3 in turn passes the +HORZ 2^0 pulses to the pulse transformer causing it to produce bias voltage that turns off Q6 and A2. The use of the +HORZ 2^0 pulses provide efficient energy transfer across the pulse transformer. As Q6 and Q2 turn off, current flow in the transmit loop drops to about 0.2 mA because R33 now provides the only return path for current to the external system. The alternating mark and space bits of a transmit word turn the pulse transformer off and on and turn Q6 and Q2 on and off to reproduce the bits as current-flow marks and no-current-flow spaces on the transmit loop.

In full-duplex mode, current flows through the receive circuit loop via AJ2-14, jumper A-C, the MCT-4 diode, and back to ground. With current flowing through the MCT-4 diode, MCT-4 turns on and lowers the controller voltage of Q5 so that Q5 and Q4 turn off.

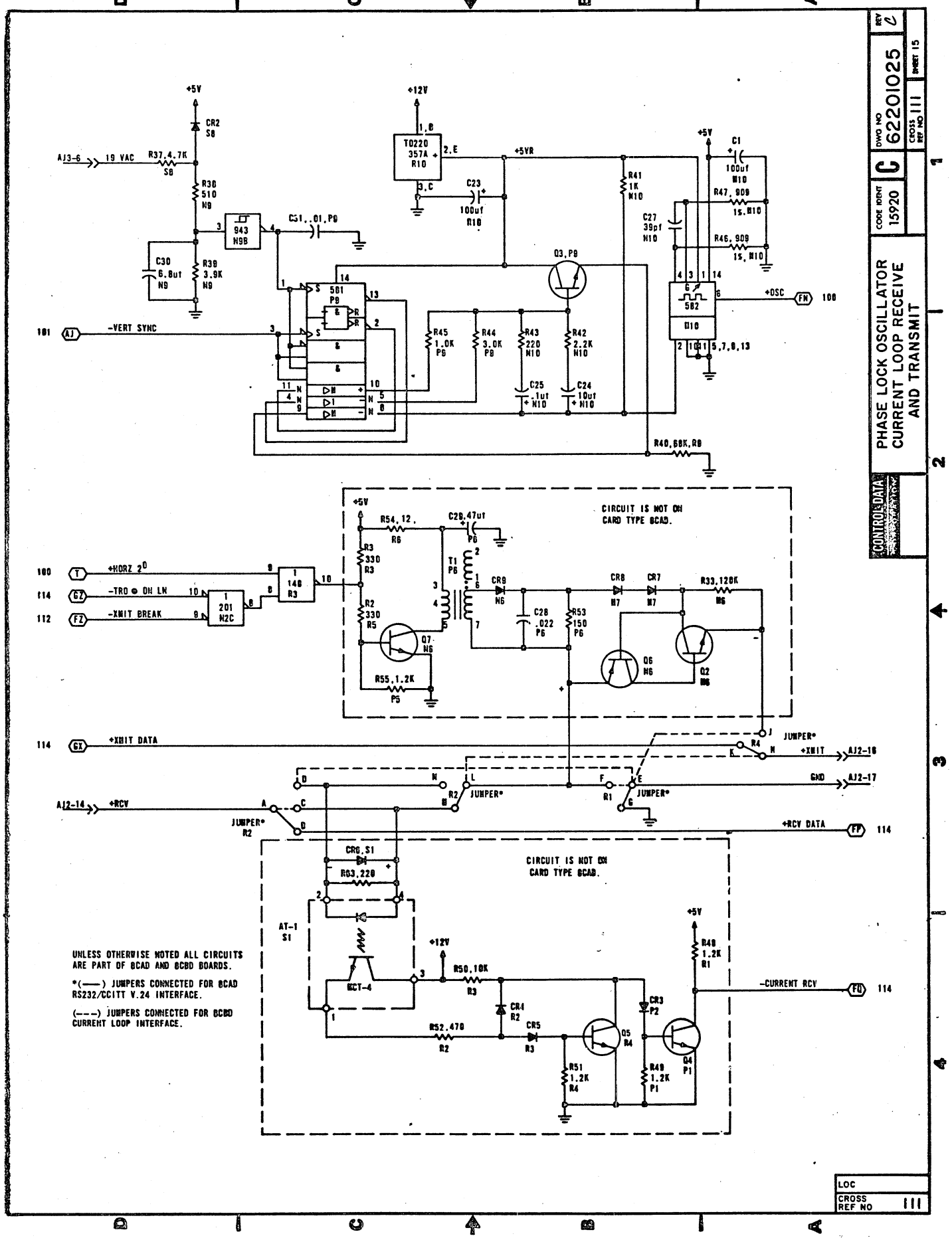
PHASE LOCK OSCILLATOR
CURRENT LOOP RECEIVE
AND TRANSMIT
DWG NO 62201025
REV C
CODE IDENT 15920
CROSS REF NO 111
SHEET 15
CONTROL DATA
+5V
+12V
CR2 S8
AJ3-6
19 VAC
R37,4.7K S8
R30 510 N9
943 N9B
C31,.01,P8
C30 6.8uf N9
R39 3.9K N9
T0220 357A R10
+5VR
C23 100uf R10
R41 1K N10
C1 100uf N10
R47, 909 1% N10
R46, 909 1% N10
C27 39pf N10
Q3, P8
582 N10
+OSC FN 100
101 AJ -VERT SYNC
581 P8
R45 1.0K P8
R44 3.0K P8
R43 220 N10
R42 2.2K N10
C25 .1uf N10
C24 10uf N10
5,7,8,13
R40,68K,R8
CIRCUIT IS NOT ON CARD TYPE 8CAD.
R54,12, R6
C29,47uf P8
R3 330 R3
R2 330 R5
T1 P6
CR8 N6
CR8 N7
CR7 N7
R33,120K N6
C28 .022 P6
R53 150 P6
Q7 N6
Q6 N6
Q2 N6
R55,1.2K P5
100 T +HORZ 2^0
114 GZ -TRD @ ON LN
112 FZ -XMIT BREAK
201 N2C
148 R3
114 GX +XMIT DATA
JUMPER* R4
+XMIT AJ2-16
GND AJ2-17
AJ2-14 +RCV
JUMPER* R2
JUMPER* R1
+RCV DATA FP 114
CR6,S1
R63,220
CIRCUIT IS NOT ON CARD TYPE 8CAB.
AT-1 S1
MCT-4
+12V
R50,10K R3
CR4 R2
CR5 R3
R52,470 R2
Q5 R4
CR3 P2
Q4 P1
R48 1.2K R1
R51 1.2K R4
R49 1.2K P1
-CURRENT RCV FQ 114
UNLESS OTHERWISE NOTED ALL CIRCUITS ARE PART OF 8CAD AND 8CBD BOARDS.
*(——) JUMPERS CONNECTED FOR 8CAD RS232/CCITT V.24 INTERFACE.
(– – –) JUMPERS CONNECTED FOR 8CBD CURRENT LOOP INTERFACE.
LOC
CROSS REF NO 111

DIAGRAM 114

MODEM INTERFACE, RTS CONTROL

No changes are required to the facing-page description for this diagram. The only change on the diagram is the presentation of jumper P,Q,R.

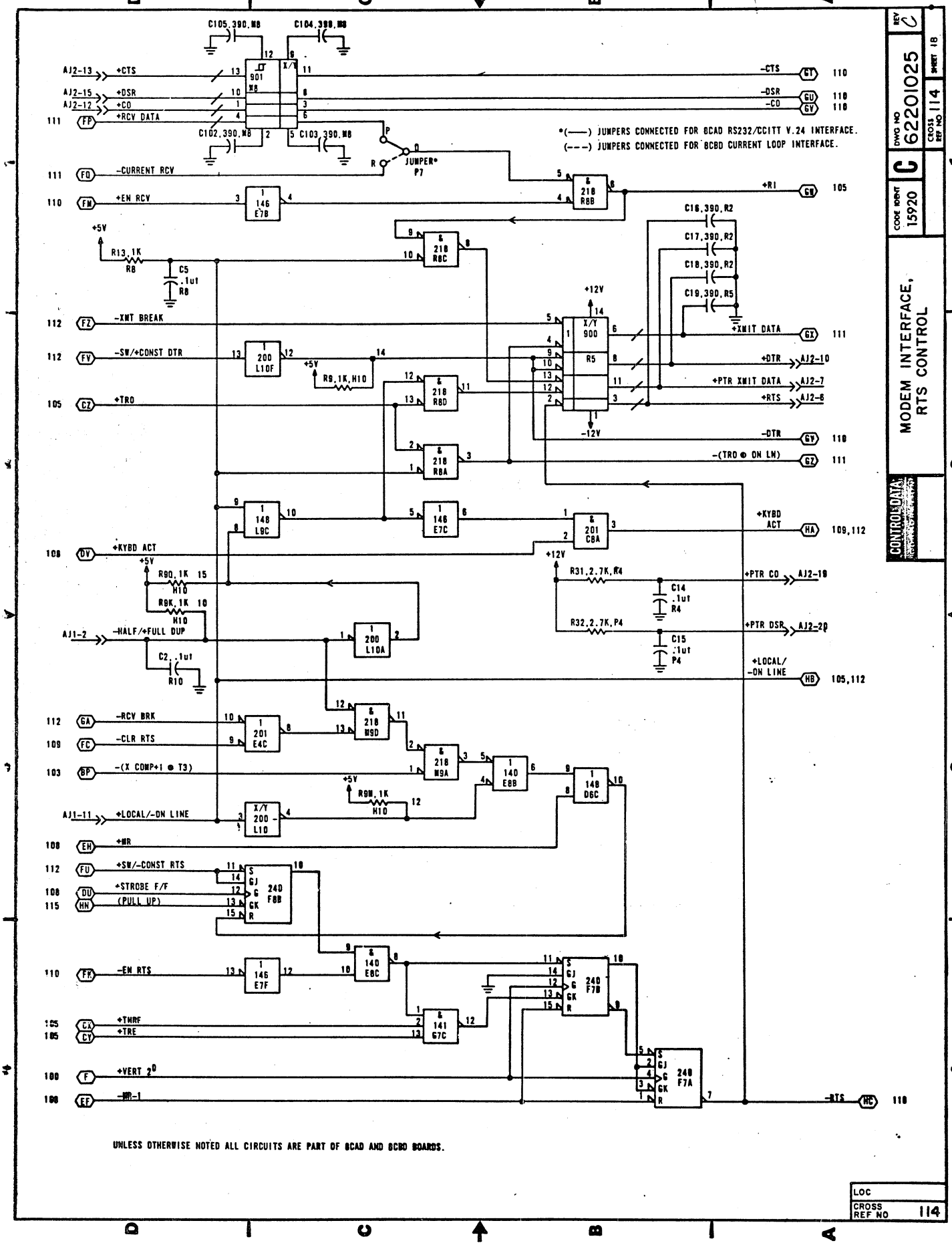
MODEM INTERFACE, RTS CONTROL
DWG NO 62201025
REV C
SHEET 18
CROSS REF NO 114
CODE IDENT 15920
*(——) JUMPERS CONNECTED FOR BCAD RS232/CCITT V.24 INTERFACE.
(---) JUMPERS CONNECTED FOR BCBD CURRENT LOOP INTERFACE.
UNLESS OTHERWISE NOTED ALL CIRCUITS ARE PART OF BCAD AND BCBD BOARDS.
CONTROL DATA
LOC
CROSS REF NO 114

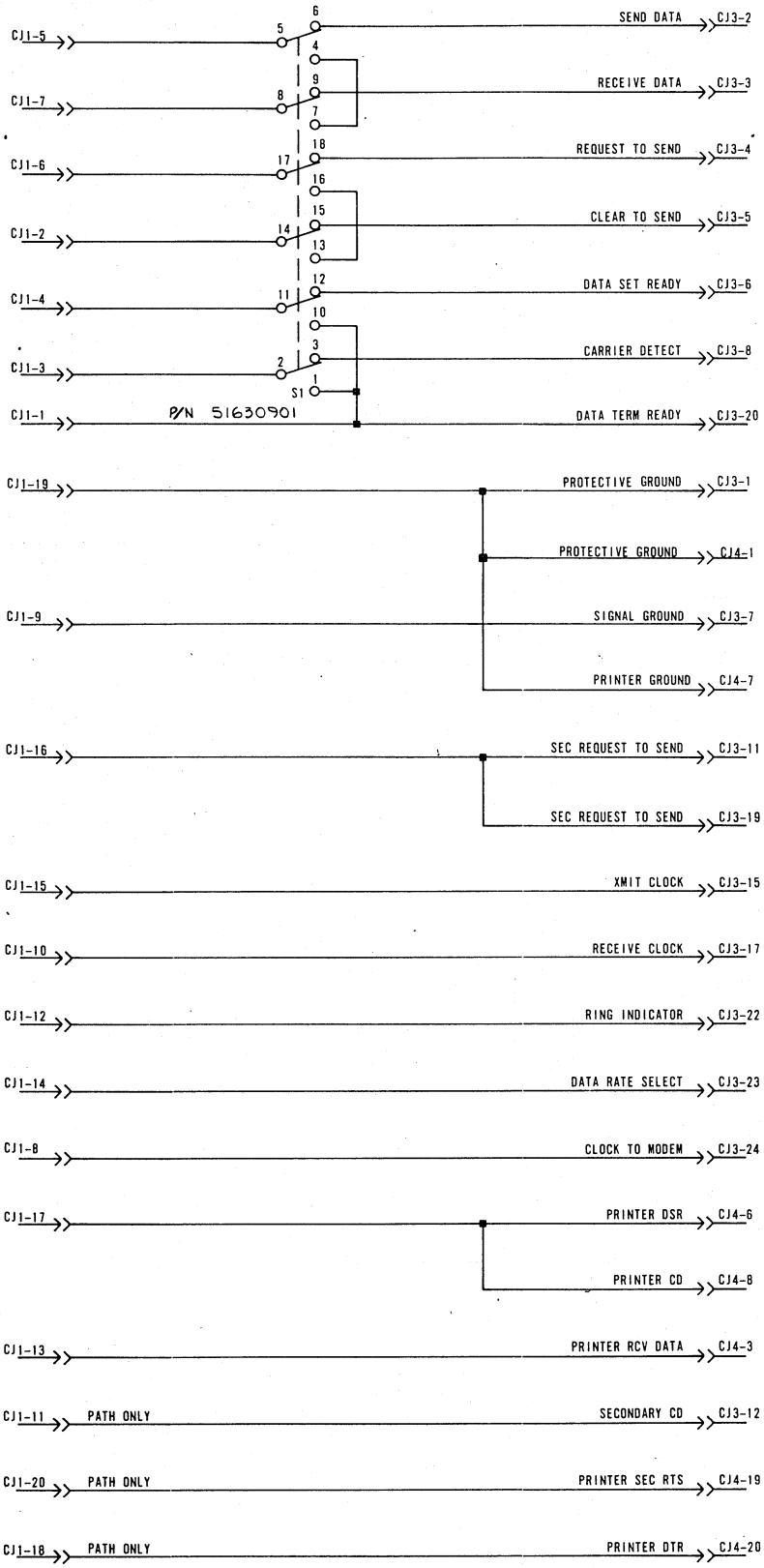

REVISION RECORD

REV	CO	DESCRIPTION	DRFT	DATE	CHKD	APP
A	106534	RELEASED CLASS A1	"	5-9-77	"	

SHEET REVISION STATUS

CONTROL DATA

	FIRST USED ON	CC560-A	
DWN		M. KUEAR	5-9-77
CHKD			5-10-77
ENGR			5-10-77
MFG			5-9-77
APPR			5-9-77

REFERENCE DRAWING
DETAIL 90445795
ASSY 90445796

COMPONENTS, EXCEPT AS NOTED

	TOLERANCE	VALUE	RATING
RES			
CAP			

TITLE
SCHEMATIC DIAGRAM, 6CTD-1
(REAR PANEL SIGNAL WIRING)

CODE IDENT 15920
DRAWING NO C 90445794
CROSS REF NO
SHEET 1 OF 1
SCALE

MAINTENANCE

Maintenance procedures described in section 6 of this manual suffice also for the Series/1-compatible terminals.

PARTS DATA

This section contains parts data for the Series/1-compatible terminals. Refer to the introduction to section 7 of this manual for introductory information concerning parts data forms and for additional parts data, genealogy charts, and spare-parts lists for the display units.

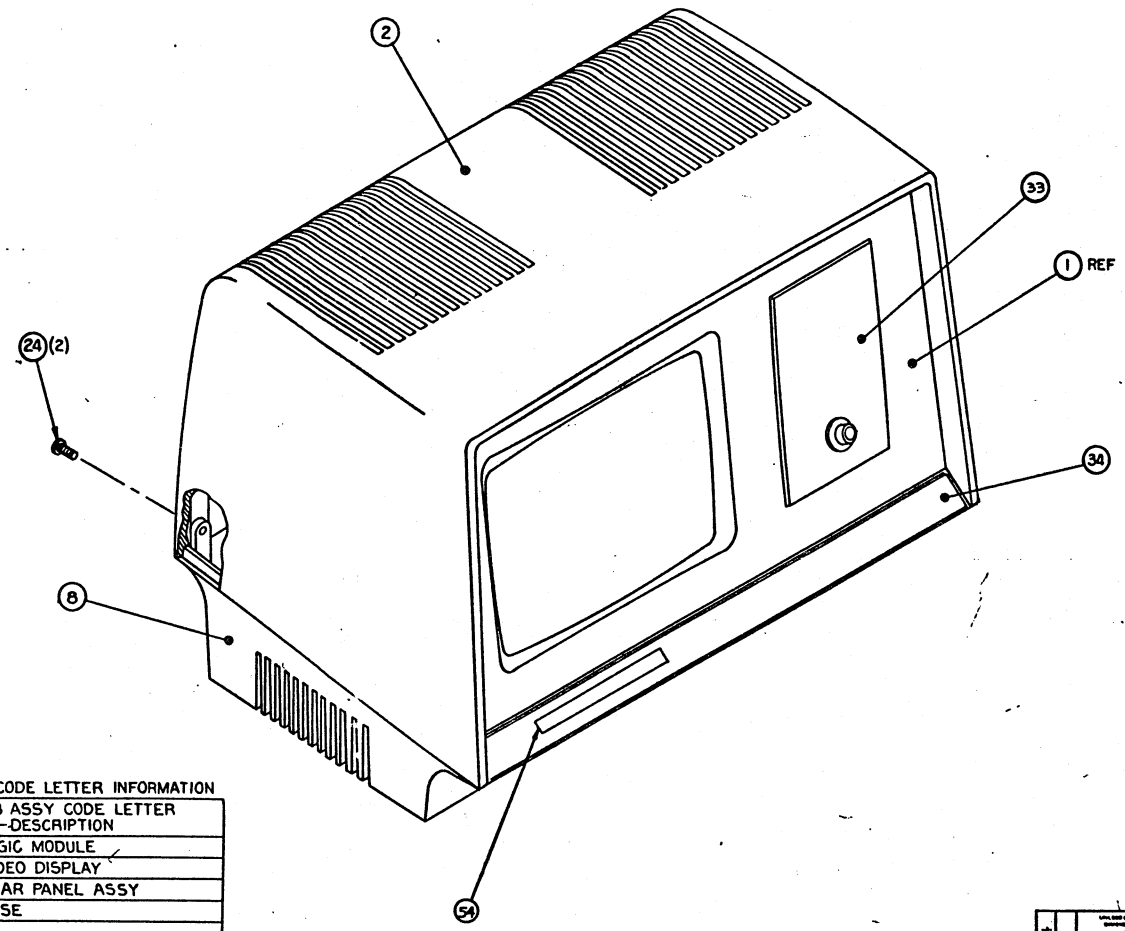

SHEET REVISION STATUS		REVISION RECORD						
2	1	REV	ECO	DESCRIPTION	DRFT	DATE	CHKD	APP
A	A	A	12990-22	RELEASED CLASS "A"	/	4-12-76	/	[illegible]
A	B	B	13472	PL CHG ONLY	WJG	6-1-79	[illegible]	[illegible]

NOTES:

1. MARK "TOP ASSY 15632094" IN AREA SHOWN PER CDC SPEC 10121508.
2. CONNECT CRT GND CLIP AS FOLLOWS:
   1. INSERT FLAG PIN IN CONNECTOR "BP1-14".
   2. ATTACH RING LUG TO STUD "E1" ON VIDEO DISPLAY ASSY (F/N 12).
3. IF REQUIRED, INSTALL F/N 48,49,50,51 WITH ADHESIVE F/N 52 PER CDC SPEC P/N 16042739 GEOMETRIC DISTORTION CORRECTION.
4. SEE W/L FIND NO. 59 FOR P/S TRANSFORMER WIRE DESTINATIONS.
5. INSTALL TRANSFORMER WITH PRIMARY POWER CONNECTOR AND GROUND LEAD TOWARD REAR OF CABINET.

SUB ASSY CODE LETTER INFORMATION

FIND NO	SUB ASSY CODE LETTER DESCRIPTION
39	A - LOGIC MODULE
12	B - VIDEO DISPLAY
11	C - REAR PANEL ASSY
8	D - BASE
13	H - POWER SUPPLY

APL 15632094

DETACHED LISTS

UNLESS OTHERWISE SPECIFIED DIMENSIONS ARE IN INCHES TOLERANCES

DO NOT SCALE DRAWING

MATERIAL

FINISH

CONTROL DATA CORPORATION

FIRST USED ON: CC555L

DWN: W.J. Glass 9-6-78

CHKD: [illegible] 9-14-78

ENGR: [illegible] 9/14/78

MFG: [illegible] 10/2/78

APPR: [illegible] 10-11-78

TITLE: DISPLAY TERMINAL S/1 RS232 60 HZ

CODE IDENT: 15920 | D | DRAWING NO: 15632094

SCALE | EC 15632084 | SHEET 1 OF 2

62957400 E

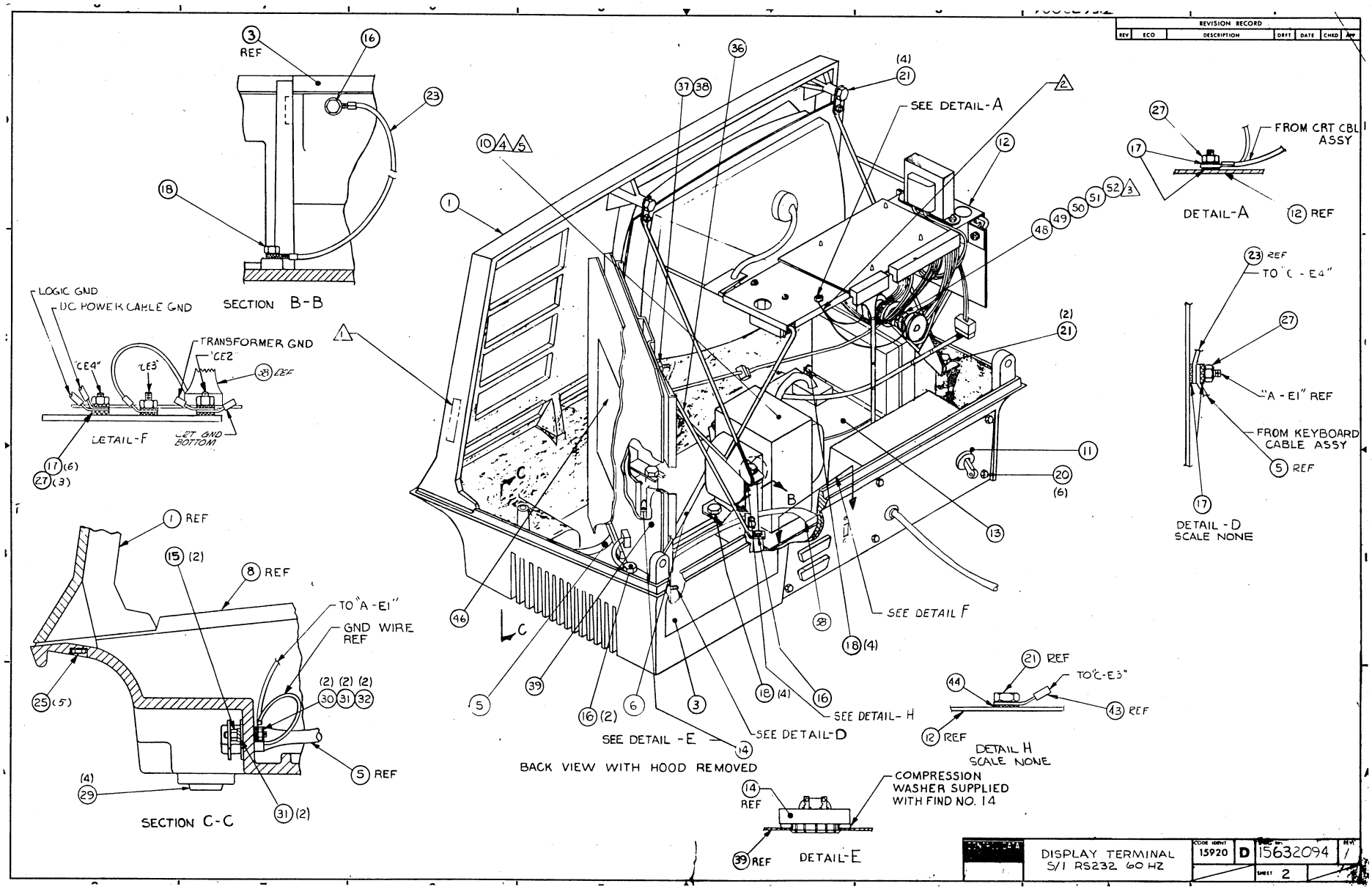

C-15/C-16

BUILD ARC 440

ASSEMBLY PARTS LIST

PRINT DATE	PAGE	FILE CHANGE NO.
04-30-79	1	00013472

DIV.	ASSEMBLY NUMBER	CD	REV.	DWG.	DESCRIPTION	MC	STATUS	STATUS DATE	ENG. RESP.	FILE DATE
0860	15632094	7	B	D	TERM, S/1 DSPL 232 60HZ (TA)	N	REL	10-12-78	CC555L	04-30-79

TYPE	ASSEMBLY NO	LI	PART NUMBER	CD	QUANTITY	U/M	PART DESCRIPTION	MC	YLD	ECO. NO. IN	ECO. NO. OUT	S/N	WK IN	WK OUT
	001	01	71452600	1	1	PC	BEZEL 12IN CRT	P						
	002	01	71492717	5	1	PC	HOOD-TERM (SEAFOAM WHITE)	A						
	003	01	71492719	1	1	PC	PANEL-ACCESS (SEAFOAM WHITE)	A						
	005	01	61402300	0	1	PC	CABLE ASSY KYBD INTERNAL	A						
	006	01	61402400	8	1	PC	CABLE ASSY DC POWER	A						
	008	01	71492718	3	1	PC	BASE-TERM (SEAFOAM WHITE)	A						
	010	01	51915301	9	1	PC	XFMR STEP DOWN 120 220 240V	P						
	011	01	61408216	2	1	PC	REAR PANEL ASSY 60HZ	A						
	012	01	61407969	7	1	PC	VIDEO DISPLAY ASSY	N						
	013	01	90460822	1	1	PC	REPLACED BY 90446105 13419	A			13472			7926
	013	02	90446105	0	1	PC	CD ASSY 9BBD (PWR SPLY MOD)	A		13472			7926	
	014	01	51908902	3	1	PC	ALARM AUDIBLE LUG FIG 2	P						
	015	01	71455801	2	2	PC	STANDOFF MALE/FEMALE 4-40 STL	P						
	016	01	51858501	3	4	PC	SCR TPG HEX-WSHR SLT 10X1/2L	B						
	017	01	10126403	4	10	PC	WSHR, NO.10 EXT/T LK STL ZP	B						
	018	01	51917790	1	9	PC	SCREW HEX WSHR HD 8-18X1/2	B						
	020	01	00860303	7	6	PC	MSCR HEX-LK PLN 6-32X3/8 STL	B						
	021	01	00860311	0	6	PC	MSCR HEX-LK PLN 8-32X3/8 STL	B						
	023	01	61391105	6	2	PC	GND WIRE ASSY 7.5 16GA	A						
	024	01	10127153	4	2	PC	MSCR PAN PHL 1/4-20X.500 STL	B						
	025	01	51858503	9	5	PC	SCR TPG HEX-WSHR SLT 10X3/4L	B						

BUILD ARC 440

ASSEMBLY PARTS LIST

PRINT DATE	PAGE	FILE CHANGE NO.
04-30-79	2	00013472

DIV.	ASSEMBLY NUMBER	CD	REV.	DWG.	DESCRIPTION	MC	STATUS	STATUS DATE	ENG. RESP.	FILE DATE
0860	15632094	7	B	D	TERM, S/1 DSPL 232 60HZ (TA)	N	REL	10-12-78	CC555L	04-30-79

TYPE	ASSEMBLY NO	LI	PART NUMBER	CD	QUANTITY	U/M	PART DESCRIPTION	MC	YLD	ECO. NO. IN	ECO. NO. OUT	S/N	WK IN	WK OUT
	027	01	10125108	0	5	PC	NUT, HEX 10-32 MSCR STL ZP	B						
	028	01	66300771	4	REF	PC	GENEALOGY MOD 1 DSPLY	D						
	029	01	51805801	1	4	PC	BUMPER, RUBBER .300H SLF=STKG	P						
	030	01	10125603	0	2	PC	WSHR, NO.4 TYP A PLN STL ZP	B						
	031	01	10126400	0	4	PC	WSHR, NO.4 EXT/T LK STL ZP	B						
	032	01	10125103	1	2	PC	NUT, HEX 4-40 MSCR STL ZP	B						
	033	01	61407552	1	1	PC	FRONT PANEL ASSY MOD 1	A						
	034	01	71491845	5	1	PC	PANEL BLANK, SWITCH .PLASTIC)	P						
	036	01	71489000	1	1	PC	SUPPORT LOGIC MODULE	P						
	037	01	10125105	6	1	PC	NUT, HEX 6-32 MSCR STL ZP	B						
	038	01	10126401	8	1	PC	WSHR, NO.6 EXT/T LK STL ZP	B						
	039	01	61408367	3	1	PC	LOGIC MODULE ASSY	N						
	043	01	61391104	9	1	PC	GND WIRE ASSY 4.5 16GA	A						
	044	01	10126402	6	1	PC	WSHR, NO.8 EXT/T LK STL ZP	B						
	046	01	71491949	5	1	PC	LABEL POWER INTERCONN	P						
	048	01	51917054	2	1	PC	MAGNET BAR	P						
	049	01	51917051	8	1	PC	MAGNET BAR	P						
	050	01	51917052	6	1	PC	MAGNET BAR	P						
	051	01	51917053	4	1	PC	MAGNET BAR	P						
	052	01	51004063	7	100	OZ	ADHESIVE, SEALANT SIL RUBBER	B						
	053	01	16042739	9	REF	PC	GEOM DIST CORRECTION	D						

BUILD ARC 440

ASSEMBLY PARTS LIST

PRINT DATE	PAGE	FILE CHANGE NO.
04-30-79	3	00013472

DIV	ASSEMBLY NUMBER	CD	REV	DWG	DESCRIPTION	MC	STATUS	STATUS DATE	ENG. RESP.	FILE DATE
0860	15632094	7	B	D	TERM, S/1 DSPL 232 60HZ (TA)	N	REL	10-12-78	CC555L	04-30-79

T	FIND NO	LI	PART NUMBER	CD	MC	QUANTITY	U/M	PART DESCRIPTION	MC	TLD	ECO. NO. IN	ECO. NO. OUT	S/N	WK IN	WK OUT
	054	01	15010307	5		1	PC	ID EMBLEM, PRODUCT MEDIUM AL	P						
	055	01	62199500	0		REF	PC	AC/DC PWR INTERCONN DIAG	D						
	056	01	62201025	4		REF	PC	LOG DIAG	D						
	057	01	62200946	2		REF	PC	INTCONN DIAG SIGNAL	D						
	058	01	61407631	3		1	PC	CABLE ASSY REAR PNL MONITOR	A						
	059	01	61407980	4		REF	PC	WL/POWER SUPPLY	D						
	060	01	16039400	3		REF	PC	POWER SUPPLY SPEC	D						
								0049 TOTAL LINES							

15632095

SHEET REVISION STATUS		REVISION RECORD						
2	1	REV	ECO	DESCRIPTION	DEPT	DATE	CHKD	APP
A	A	A	12-990-22	RELEASED CLASS "A"	/	9/2/78	/	[illegible]
A	B	B	13472	PL CHG ONLY	WJG	6-1-79	WJG	[illegible]

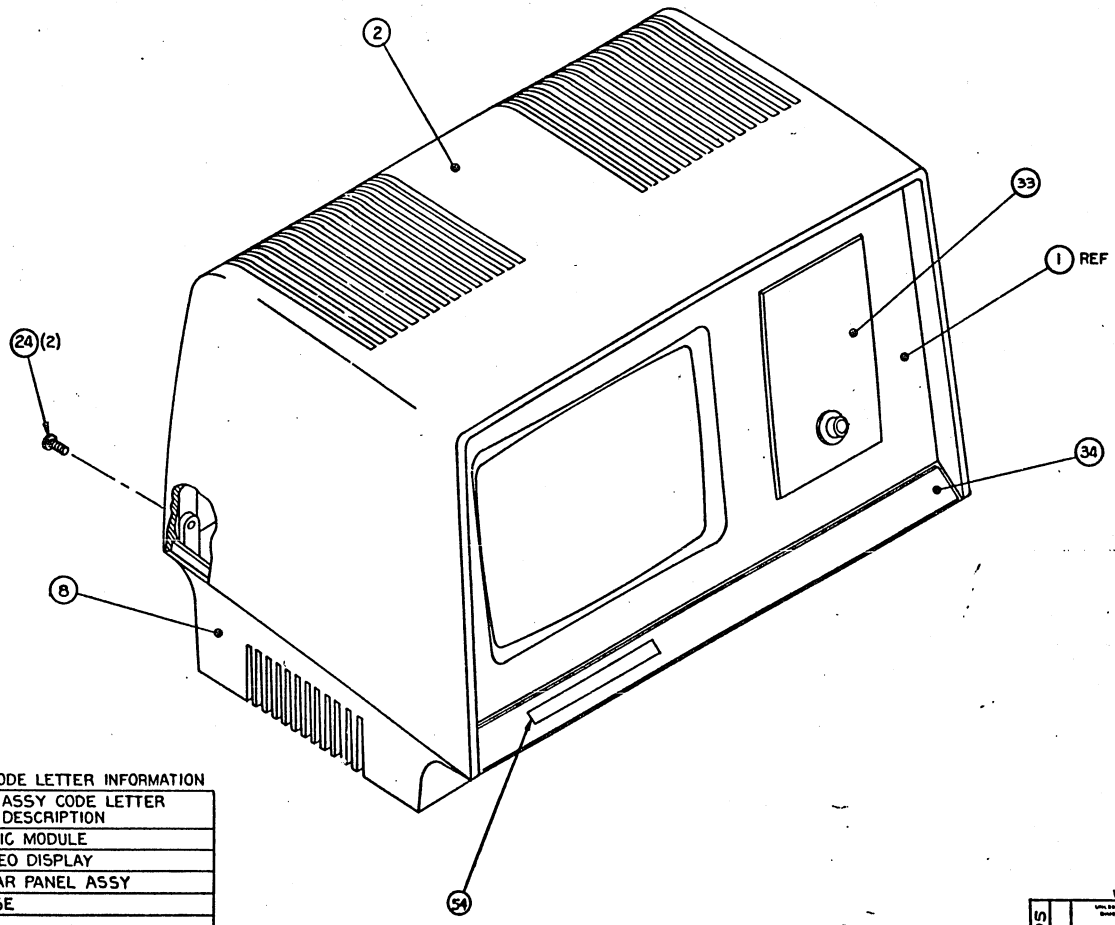

NOTES:

1. MARK "TOP ASSY 15632095" IN AREA SHOWN PER CDC SPEC 10121508.
2. CONNECT CRT GND CLIP AS FOLLOWS:
   1. INSERT FLAG PIN IN CONNECTOR "BP1-14".
   2. ATTACH RING LUG TO STUD "E1" ON VIDEO DISPLAY ASSY (F/N 12).
3. IF REQUIRED, INSTALL F/N 48, 49, 50, 51 WITH ADHESIVE F/N 52 PER CDC SPEC P/N 16042739 GEOMETRIC DISTORTION CORRECTION.
4. SEE W/L FIND NO. 59 FOR P/S TRANSFORMER WIRE DESTINATIONS.
5. INSTALL TRANSFORMER WITH PRIMARY POWER CONNECTOR AND GROUND LEAD TOWARD REAR OF CABINET.

SUB ASSY CODE LETTER INFORMATION

FIND NO	SUB ASSY CODE LETTER DESCRIPTION
39	A - LOGIC MODULE
12	B - VIDEO DISPLAY
11	C - REAR PANEL ASSY
8	D - BASE
13	H - POWER SUPPLY

APL 15632095

DETACHED LISTS

UNLESS OTHERWISE SPECIFIED DIMENSIONS ARE IN INCHES TOLERANCES

DO NOT SCALE DRAWING

MATERIAL

FINISH

CONTROL DATA

FIRST USED ON: CC555M

DWN	W J Glass	9-6-78
CHKD	R. Trautman	9-18-78
ENGR	[illegible]	9/14/78
MFG	D. Stinger	10/2/78
APPR	S. H. [illegible]	10-4-78

TITLE: DISPLAY TERMINAL S/I C/L 60 HZ

CODE IDENT: 15920 | D | DRAWING NO: 15632095

SCALE | EC 15632085 | SHEET 1 OF 2

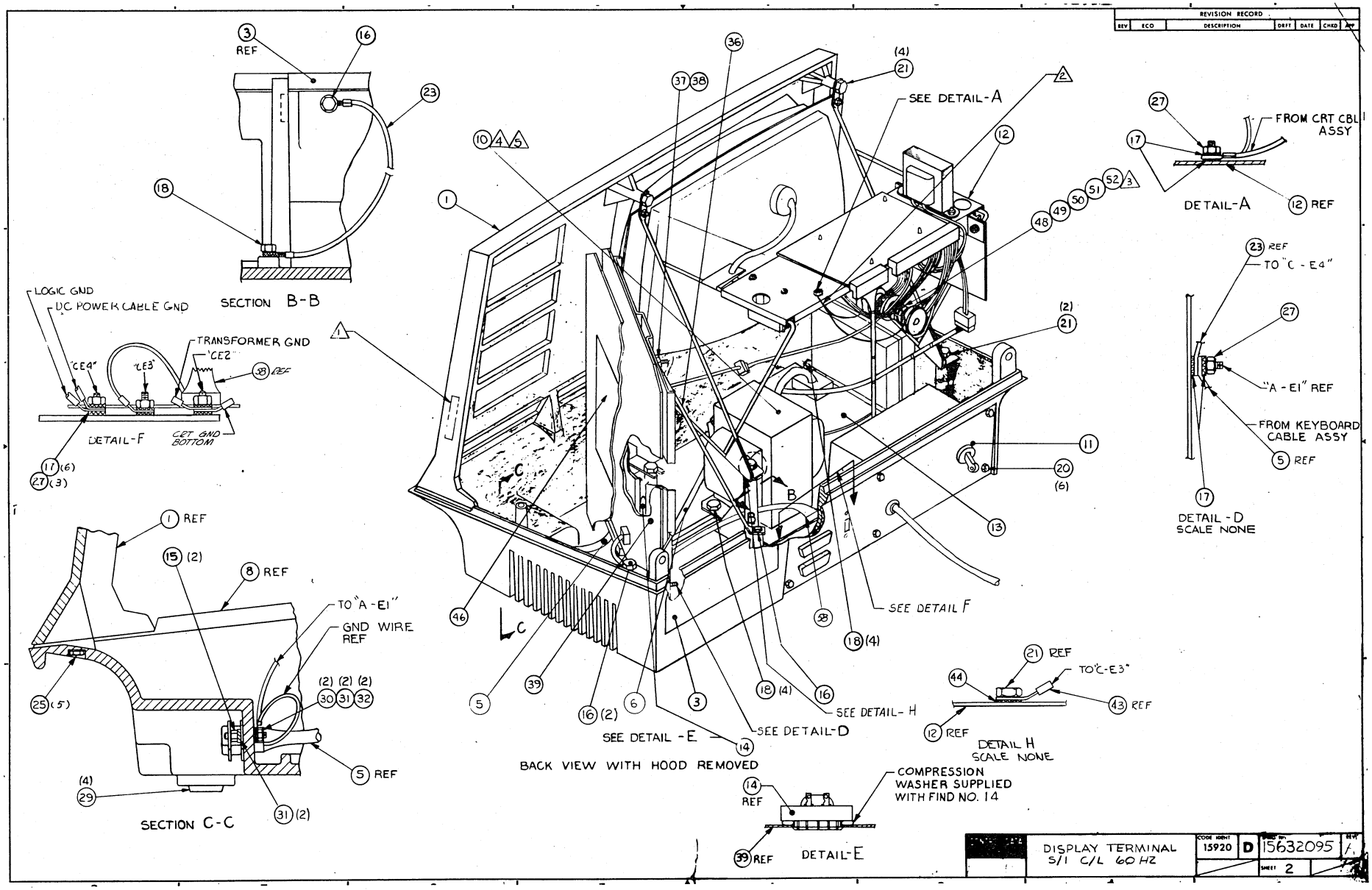
REVISION RECORD
REV ECO DESCRIPTION DRFT DATE CHKD APP
SECTION B-B
DETAIL-F
SECTION C-C
BACK VIEW WITH HOOD REMOVED
SEE DETAIL-A
SEE DETAIL F
SEE DETAIL-H
SEE DETAIL-D
SEE DETAIL -E
DETAIL-A
DETAIL-D
SCALE NONE
DETAIL H
SCALE NONE
DETAIL-E
FROM CRT CBL ASSY
FROM KEYBOARD CABLE ASSY
TO "C-E4"
TO "C-E3"
TO "A-E1"
"A-E1" REF
GND WIRE REF
COMPRESSION WASHER SUPPLIED WITH FIND NO. 14
LOGIC GND
D.C. POWER CABLE GND
TRANSFORMER GND
"CE4"
"CE3"
"CE2"
CRT GND BOTTOM
DISPLAY TERMINAL
5/1 C/L 60 HZ
CODE IDENT 15920
D
15632095
SHEET 2

BUILD ARC 440

ASSEMBLY PARTS LIST

PRINT DATE	PAGE	FILE CHANGE NO.
04-30-79	1	00013472

DIV	ASSEMBLY NUMBER	CD	REV	DWG.	DESCRIPTION	MC	STATUS	STATUS DATE	ENG. RESP.	FILE DATE
0860	15632[illegible]95	4	B	D	TERM, S/1 DSPL C/L 60HZ (TA)	N	REL	10-12-78	CC555M	04-30-79

T	FIND NO	LI	PART NUMBER	CD	MC	QUANTITY	U/M	PART DESCRIPTION	MC	YLD	ECO. NO. IN	ECO. NO. OUT	S/N	WK IN	WK OUT
	001	01	71452600	1		1	PC	BEZEL 12IN CRT	P						
	002	01	71492717	5		1	PC	HOOD-TERM (SEAFOAM WHITE)	A						
	003	01	71492719	1		1	PC	PANEL-ACCESS (SEAFOAM WHITE)	A						
	005	01	61402300	0		1	PC	CABLE ASSY KYBD INTERNAL	A						
	006	01	61402400	8		1	PC	CABLE ASSY DC POWER	A						
	008	01	71492718	3		1	PC	BASE-TERM (SEAFOAM WHITE)	A						
	010	01	51915301	9		1	PC	XFMR STEP DOWN 120 220 240V	P						
	011	01	61408216	2		1	PC	REAR PANEL ASSY 60HZ	A						
	012	01	61407969	7		1	PC	VIDEO DISPLAY ASSY	N						
	013	01	90460822	1		1	PC	REPLACED BY 90446105 13619	A			1 472			7926
	013	02	90446105	0		1	PC	CD ASSY 9BBD (PWR SPLY MOD)	A		13472			7926	
	014	01	51908902	3		1	PC	ALARM AUDIBLE LUG FIG 2	P						
	015	01	71455801	2		2	PC	STANDOFF MALE/FEMALE 4-40 STL	P						
	016	01	51858501	3		4	PC	SCR TPG HEX-WSHR SLT 10X1/2L	B						
	017	01	10126403	4		10	PC	WSHR, NO.10 EXT/T LK STL ZP	B						
	018	01	51917790	1		9	PC	SCREW HEX WSHR HD 8-18X1/2	B						
	020	01	00860303	7		6	PC	MSCR HEX-LK PLN 6-32X3/8 STL	B						
	021	01	00860311	0		6	PC	MSCR HEX-LK PLN 8-32X3/8 STL	B						
	023	01	61391105	6		2	PC	GND WIRE ASSY 7.5 16GA	A						
	024	01	10127153	4		2	PC	MSCR PAN PHL 1/4-20X.500 STL	B						
	025	01	51858503	9		5	PC	SCR TPG HEX-WSHR SLT 10X3/4L	B						

BUILD ARC 440

ASSEMBLY PARTS LIST

PRINT DATE	PAGE	FILE CHANGE NO.
04-30-79	2	00013472

DIV	ASSEMBLY NUMBER	CD	REV	DWG.	DESCRIPTION	MC	STATUS	STATUS DATE	ENG. RESP.	FILE DATE
0860	15632095	4	B	D	TERM, S/1 DSPL C/L 60HZ (TA)	N	REL	10-12-78	CC555M	04-30-79

T	FIND NO	LI	PART NUMBER	CD	MC	QUANTITY	U/M	PART DESCRIPTION	MC	YLD	ECO. NO. IN	ECO. NO. OUT	S/N	WK IN	WK OUT
	027	01	10125108	0		5	PC	NUT, HEX 10-32 MSCR STL ZP	B						
	028	01	66300771	4		REF	PC	GENEALOGY MOD 1 DSPLY	D						
	029	01	51805801	1		4	PC	BUMPER, RUBBER .300H SLF-STKG	P						
	030	01	10125603	0		2	PC	WSHR, NO.4 TYP A PLN STL ZP	B						
	031	01	10126400	0		4	PC	WSHR, NO.4 EXT/T LK STL ZP	B						
	032	01	10125103	1		2	PC	NUT, HEX 4-40 MSCR STL ZP	B						
	033	01	61407552	1		1	PC	FRONT PANEL ASSY MOD 1	A						
	034	01	71491845	5		1	PC	PANEL BLANK, SWITCH ,PLASTIC)	P						
	036	01	71489000	1		1	PC	SUPPORT LOGIC MODULE	P						
	037	01	10125105	6		1	PC	NUT, HEX 6-32 MSCR STL ZP	B						
	038	01	10126401	8		1	PC	WSHR, NO.6 EXT/T LK STL ZP	B						
	039	01	61408368	1		1	PC	LOGIC MODULE ASSY	N						
	043	01	61391104	9		1	PC	GND WIRE ASSY 4.5 16GA	A						
	044	01	10126402	6		1	PC	WSHR, NO.8 EXT/T LK STL ZP	B						
	046	01	71491949	5		1	PC	LABEL POWER INTERCONN	P						
	048	01	51917056	2		1	PC	MAGNET BAR	P						
	049	01	51917051	8		1	PC	MAGNET BAR	P						
	050	01	51917052	6		1	PC	MAGNET BAR	P						
	051	01	51917053	4		1	PC	MAGNET BAR	P						
	052	01	51004063	7		100	OZ	ADHESIVE, SEALANT SIL RUBBER	B						
	053	01	16042739	9		REF	PC	GEOM DIST CORRECTION	D						

BUILD ARC 440

ASSEMBLY PARTS LIST

PRINT DATE	PAGE	FILE CHANGE NO.
04-30-79	3	00013472

DIV.	ASSEMBLY NUMBER	CD	REV.	DWG.	DESCRIPTION	MC	STATUS	STATUS DATE	ENG. RESP.	FILE DATE
0860	15632095	4	B	D	TERM, S/1 DSPL C/L 60HZ (TA)	N	REL	10-12-78	CC555M	04-30-79

T	FIND NO	LI	PART NUMBER	CD	M	QUANTITY	U/M	PART DESCRIPTION	MC	YLD	ECO. NO. IN	ECO. NO. OUT	S/N	WK IN	WK OUT
	054	01	15010307	5		1	PC	ID EMBLEM, PRODUCT MEDIUM AL	P						
	055	01	62199500	0		REF	PC	AC/DC PWR INTERCONN DIAG	D						
	056	01	62201026	2		REF	PC	LOG DIAG	D						
	057	01	62200946	2		REF	PC	INTCONN DIAG SIGNAL	D						
	058	01	61407631	3		1	PC	CABLE ASSY REAR PNL MONITOR	A						
	059	01	61407980	4		REF	PC	WL/POWER SUPPLY	D						
	060	01	16039400	3		REF	PC	POWER SUPPLY SPEC	D						
								0049 TOTAL LINES							

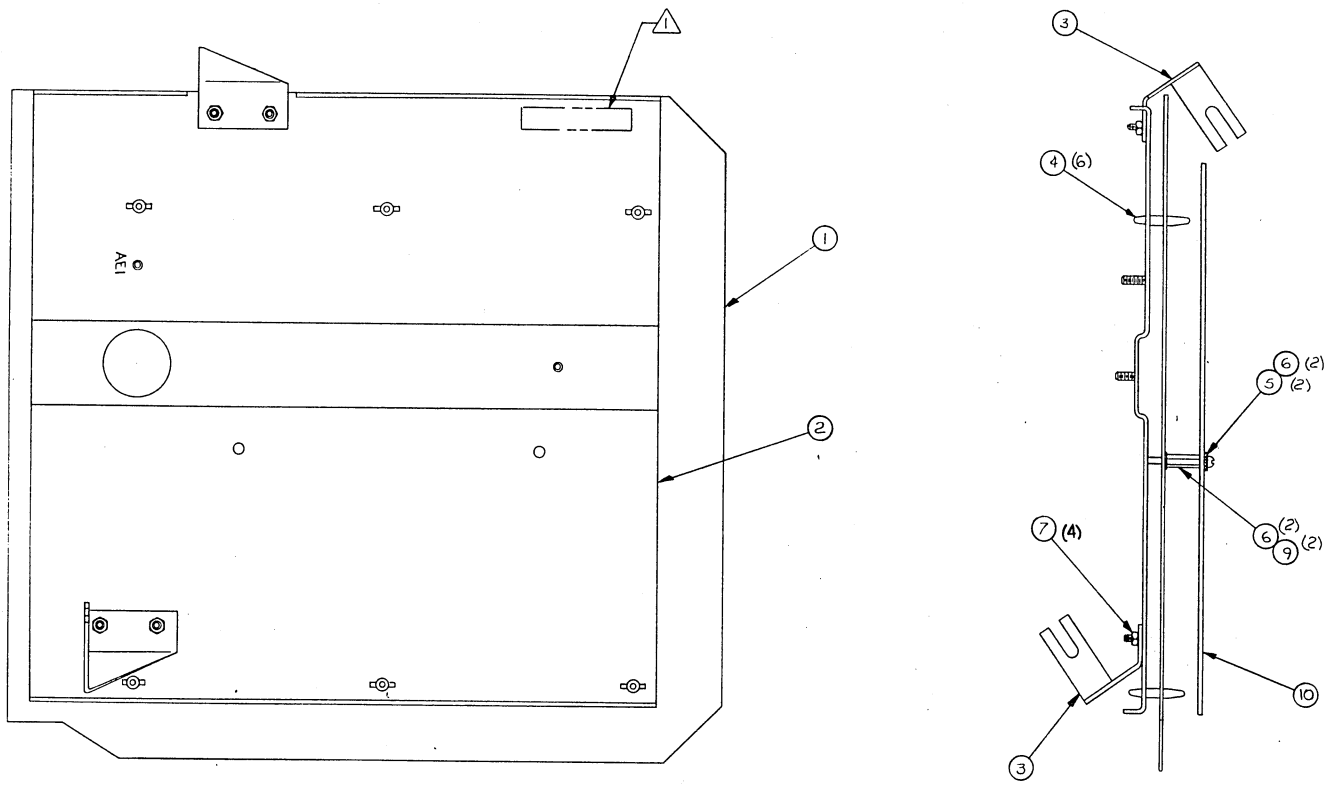

SHEET REVISION STATUS	REVISION RECORD						
	REV	ECO	DESCRIPTION	DRFT	DATE	CHKD	APP
	A	12490-22	RELEASED CLASS 'A'		[illegible]		[illegible]

NOTES:

1. MARK "ASSY 61408367" PER CDC SPEC 10121508.

APL 61408367	DETACHED LISTS	UNLESS OTHERWISE SPECIFIED DIMENSIONS ARE IN INCHES TOLERANCES 3 PLACE ± / 2 PLACE ± / ANGLES ± / DO NOT SCALE DRAWING MATERIAL FINISH	CONTROL DATA. FIRST USED ON CC555L DWN [illegible] 9-29-78 CHKD [illegible] 9-29-78 ENGR [illegible] 10-[illegible] MFG [illegible] 10/4/78 APPR [illegible] 10-10-78

TITLE: LOGIC MODULE ASSY

CODE IDENT		DRAWING NO
15920	D	61408367

SCALE 1/1 NHA 15632094 SHEET 1 OF 1

BUILD ARC 230

ASSEMBLY PARTS LIST

PRINT DATE	PAGE	FILE CHANGE NO.
10-16-78	1	12490-22

DIV.	ASSEMBLY NUMBER	CD	REV.	DWG.	DESCRIPTION	MC	STATUS	STATUS DATE	ENG. RESP.	FILE DATE
0860	61408367	3	A	D	LOGIC MODULE ASSY	A	REL	10-12-78		10-16-78

T	FIND NO	LI	PART NUMBER	CD	M	QUANTITY	U/M	PART DESCRIPTION	MC	YLD	ECO. NO. IN	ECO. NO. OUT	S/N	WK IN	WK OUT
	001	01	90445967	4		1	PC	CD ASSY &CAD LOG MOD	A						
	002	01	71485900	6		1	PC	MOUNTING PLATE	P						
	003	01	71488500	1		2	PC	BRACKET MTG PLATE	P						
	004	01	51777300	8		6	PC	SPRT, CKT BD 3/16 NYL FIG 1	P						
	005	01	10127104	7		2	PC	MSCR PAN PHL 4-40X 3/8	B						
	006	01	10126400	0		4	PC	WSHR NO.4 EXT TOOTH LK TYP A	B						
	007	01	10122901	1		4	PC	NUT TWIN SELF LOCKING 6-32	B						
	009	01	51875304	1		2	PC	STDOFF, M-F HEX BRS 4-40X5/8	B						
	010	01	71491829	9		1	PC	SHIELD(PWB ASSY)	P						
								0009 TOTAL LINES							

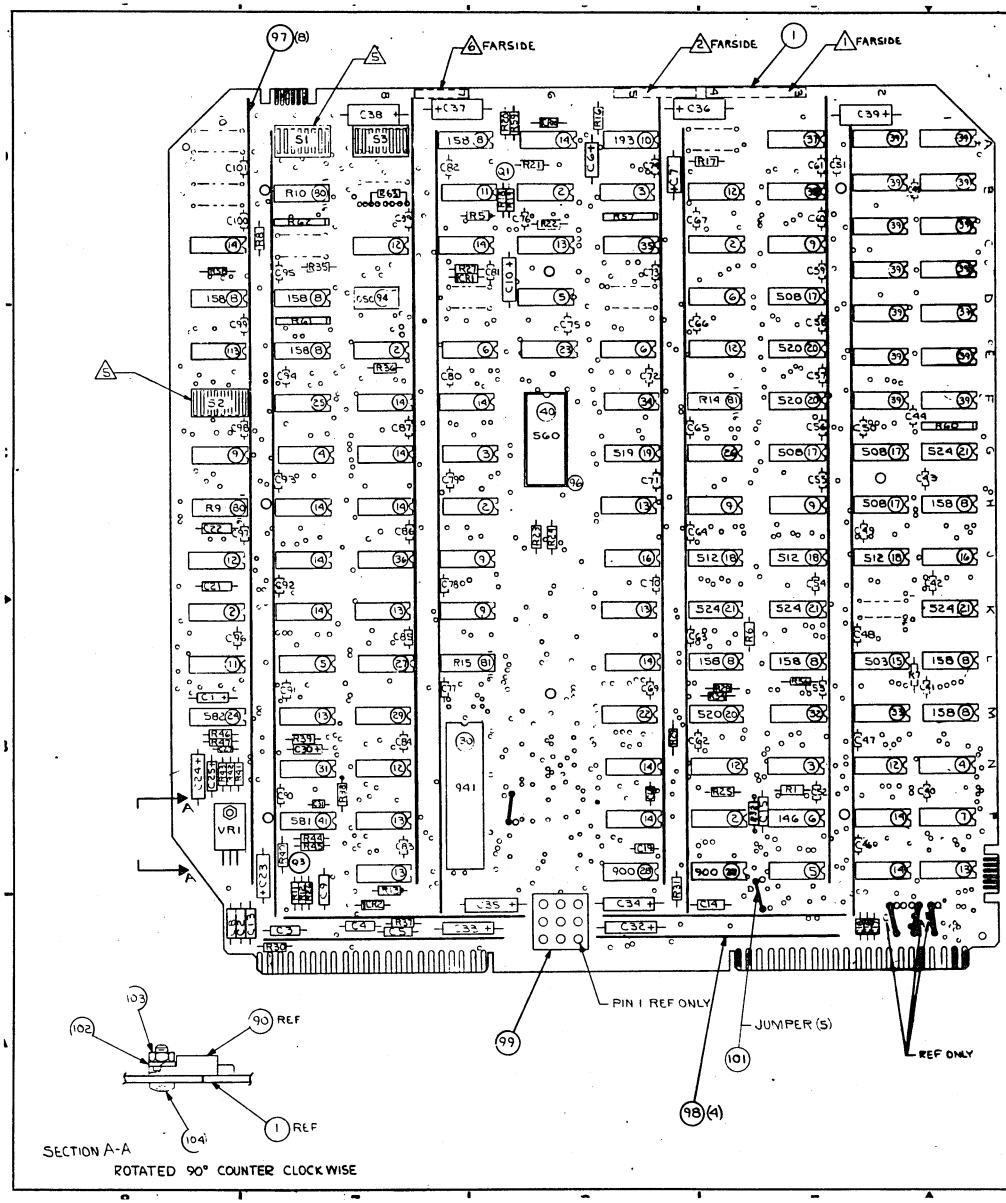

CROSS-REFERENCE TABLE	
FIND NO.	REFERENCE DESIGNATION
45	Q1
46	Q3
49	C2,C3,C4,C5,C8,C14,C15 C21,C22
50	C24
51	C9,C13
52	C1,C6,C7,C23
53	C25
54	C10
55	C16,C17,C18,C19
56	C31,C40,C41,C42,C43 C44,C45,C46,C47,C48,C49 THRU87,89 THRU101
57	C32,C33,C34,C35,C36,C37,C38,C39
58	C30
60	C27
66	R21
67	R27
68	R26,R30
69	R5,R6,R7,R8,R11,R12,R13,R25 R35,R36,R41,R45
70	R1,R37
71	R20
72	R18
73	R19,R22
74	R17
75	R31,R32
76	R23
77	R24
78	R16
	R4 NOT USED
80	R9,R10
81	R14,R15
82	R38
83	R39
84	R40
85	R42
86	R43
87	R44
88	R46,R47
89	CR1,CR2,CR10
90	VR1
91	S1,S2,S3
109	R28,R29,R34,R56,R63
110	R57,R60,R61
111	R59
112	R58
114	R62

SHEET REVISION STATUS	REVISION RECORD					
	REV	ECO	DESCRIPTION	DRFT	DATE	CHKD	APP
	A	12990-22	RELEASED CLASS 'A'	/	10/16/78	/	[illegible]
	B	13218	REVISED PER ECO	R H	11/17/78	[illegible]	[illegible]

NOTES:

1. APPLY ASSY NO., REV. LEVEL, AND LOC. CODE IN AREA SHOWN. MARK PER CDC SPEC 10121508; CHARACTER HEIGHT .12 (12PT) COLOR WHITE.
2. MARK SERIAL NO. IN AREA SHOWN PER CDC STD. 1.01.025 AND CDC SPEC 10121508, .12 HEIGHT, COLOR WHITE.
3. CAPACITOR C88 NOT USED.
4. FIND NUMBERS, ELEMENT IDENTIFIERS, AND REFERENCE DESIGNATIONS ARE FOR REFERENCE ONLY AND DO NOT APPEAR ON PART.
5. SWITCH CONTACTS ARE CLOSED WHEN TOGGLE TOWARD TOP OF BOARD IS DEPRESSED.
6. APPLY 8CAD IN AREA SHOWN. MARK PER CDC SPEC 10121508, CHARACTER HEIGHT .12 (12PT) COLOR WHITE.
7. PERMANENT REWORK SHALL CONFORM TO CDC SPEC 16019500.

CHANGE TABLE	
DELETIONS	ADDITIONS
CUT FOIL: 1) E7-2 (S.S.) 2) F5-14 TO FEED THRU (S.S)	ADD WIRE 1) A7-8 TO A8-8 2) A8-9 TO B8-11 3) B8-11 TO N7-36 4) F5-14 TO L9-1

APL 90445967

DETACHED LISTS

UNLESS OTHERWISE SPECIFIED DIMENSIONS ARE IN INCHES TOLERANCES: 3 PLACE ± — 2 PLACE ± — 1 INCHES ± —

DO NOT SCALE DRAWING

MATERIAL

FINISH

FIRST USED ON	CC555-L	
DWN	WJ HERMAN	9-18-78
CHKD	[illegible]	10-3-78
ENGR	[illegible]	10-4-78
MFG	[illegible]	10/9/78
APPR	[illegible]	10/16/78
MECH	[illegible]	10-11-78

TITLE: P.C. CARD ASSY, 8 CAD (LOGIC MODULE)

CODE IDENT 15920 | D | DRAWING NO 90445967

SCALE NONE | SHEET 1 OF 1

BUILD ARC 210

ASSEMBLY PARTS LIST

PRINT DATE	PAGE	FILE CHANGE NO.
02-06-79	1	00013218

DIV.	ASSEMBLY NUMBER	CD	REV.	DWG.	DESCRIPTION	MC	STATUS	STATUS DATE	ENG. RESP.	FILE DATE
0860	90445967	4	B	D	CD ASSY 8CAD LOG MOD	A	REL	10-12-78	CC555-L	11-09-78

T	FIND NO	LI	PART NUMBER	CD	M	QUANTITY	U/M	PART DESCRIPTION	MC	YLD	ECO. NO. IN	ECO. NO. OUT	S/N	WK IN	WK OUT
	001	01	90460763	7		1	PC	PW BD MULTI USE	P						
	002	01	66299099	3		6	PC	IC 7400 TTL QUAD 2-IN NAND	P						
	003	01	66299100	9		3	PC	IC TTL3 3I/P NAND PLASTIC	P						
	004	01	66299102	5		2	PC	IC TTL DUAL 4-IN NAND	P						
	005	01	66299103	3		3	PC	IC TTL QUAD 2-IN NOR	P						
	006	01	39389700	4		4	PC	IC 7404 TTL QUAD 2 1/P	P						
	007	01	88885700	0		1	PC	IC TYPE 7486TTL QUAD 2 I/P	P						
	008	01	51761500	1		9	PC	IC 74161/9316 158 TTL CNTR 6	P						
	009	01	88886400	6		6	PC	IC TYPE 74157 TTL QUAD 2I/P	P						
	010	01	50254300	2		1	PC	IC 74123 193 TTL 2 RETGR MVB	P						
	011	01	96744155	1		2	PC	IC 7406 DRVR HEX INV BUFFER	P						
	012	01	88897000	1		7	PC	IC TYPE 7408 TTL QUAD 2I/P	P						
	013	01	96744172	6		8	PC	IC 7432 218 TTL QUAD 2IN OR	P						
	014	01	88885400	7		15	PC	IC TYPE 9024 TTL DUAL FLIP FO	P						
	015	01	95814600	3		1	PC	IC 74160/9310 503 TTL UP DEC	P						
	016	01	66299110	8		2	PC	IC TTL 1 OF 10 DECODER	P						
	017	01	66299111	6		4	PC	IC TTL DUAL 4 TO 1 MUX	P						
	018	01	52342700	3		3	PC	IC 74191/9336 512 TTL 4B BIN	P						
	019	01	88882800	1		1	PC	IC 74174 519 TTL 6BIT D LATCH	P						
	020	01	15104500	2		3	PC	IC 74175 520 TTL 4 BIT D LTCH	P						
	021	01	15108600	6		4	PC	IC 7485 524 TTL 4B MGNTD CPTR	P						

BUILD ARC 210

ASSEMBLY PARTS LIST

PRINT DATE	PAGE	FILE CHANGE NO.
02-06-79	2	00013218

DIV.	ASSEMBLY NUMBER	CD	REV.	DWG.	DESCRIPTION	MC	STATUS	STATUS DATE	ENG. RESP.	FILE DATE
0860	90445967	4	B	D	CD ASSY 8CAD LOG MOD	A	REL	10-12-78	CC555-L	11-09-78

T	FIND NO	LI	PART NUMBER	CD	M	QUANTITY	U/M	PART DESCRIPTION	MC	YLD	ECO. NO. IN	ECO. NO. OUT	S/N	WK IN	WK OUT
	022	01	88923600	6		1	PC	IC TYPE 74164 TTL 8BIT	P						
	023	01	88923700	4		1	PC	IC TYPE 74165 TTL 8BIT	P						
	024	01	15105700	7		1	PC	IC 4024 582 TTL DL/V CONT MVB	P						
	025	01	51861706	3		1	PC	IC 256BIT 32X8 BP-ROM ASSY	G						
	026	01	51861711	3		1	PC	IC 256BIT 32X8 BP-ROM ASSY	V						
	027	01	51861709	7		1	PC	IC 256BIT 32X8 BP-ROM ASSY	V						
	028	01	36186400	2		2	PC	IC MC1488 900 DTL QD LN DRVR	P						
	029	01	36186500	9		1	PC	IC MC1489 901 DTL QD LN RCVR	P						
	030	01	15125700	3		1	PC	IC TR1602A 941 MOS ASYN XCVR	P						
	031	01	88896100	0		1	PC	IC 7414 RCVR TTL HEX NAND	P						
	032	01	51892308	1		1	PC	IC 1024BIT 256X4 BP-ROM ASSY	V						
	033	01	51892309	9		1	PC	IC 1024BIT 256X4 BP-ROM ASSY	V						
	034	01	51892310	7		1	PC	IC 1024BIT 256X4 BP-ROM ASSY	V						
	035	01	51892311	5		1	PC	IC 1024BIT 256X4 BP-ROM ASSY	V						
	036	01	51892315	6		1	PC	IC 1024BIT 256X4 BP-ROM ASSY	V						
	037	01	51892313	1		1	PC	IC 1024BIT 256X4 BP-ROM ASSY	V						
	038	01	51892314	9		1	PC	IC 1024BIT 256X4 BP-ROM ASSY	V						
	039	01	15140300	3		14	PC	IC 2102A-4 772A MOS 1024B RAM	P						
	040	01	15144500	4		1	PC	IC SCM3750L 560 MOS 8192B ROM	P						
	041	01	15105600	9		1	PC	IC 4044 581 TTL PH/FREQ DETR	P						
	045	01	51003059	6		1	PC	XSTR DD1 106 EPITAX NPN SIL	P						

BUILD ARC 210

ASSEMBLY PARTS LIST

PRINT DATE	PAGE	FILE CHANGE NO.
02-06-79	3	00013218

DIV.	ASSEMBLY NUMBER	CD	REV.	DWG.	DESCRIPTION	MC	STATUS	STATUS DATE	ENG. RESP.	FILE DATE
0860	90445967	4	B	D	CD ASSY BCAD LOG MOD	A	REL	10-12-78	CC555-L	11-09-78

T	FIND NO	LI	PART NUMBER	CD	M	QUANTITY	U/M	PART DESCRIPTION	MC	YLD	ECO. NO. IN	ECO. NO. OUT	S/N	WK IN	WK OUT
	046	01	51887100	9		1	PC	XSTR TO-18 LOW LVL NPN SIL	P						
	049	01	51839147	9		9	PC	CAP FXD CER .100UF 10P 100VDC	P						
	050	01	24504369	0		1	PC	CAP FXD TANT 10UF 20P 15VDCW	P						
	051	01	51839142	0		2	PC	CAP FXD CER .033UF 10P 100VDC	P						
	052	01	51879105	8		4	PC	CAP FXD TANT 100UF 10P 6VDCW	P						
	053	01	24504317	9		1	PC	CAP FXD TANT .1UF 20P 35VDCW	P						
	054	01	24504322	9		1	PC	CAP FXD TANT 47UF 20P 6VDCW	P						
	055	01	51839119	8		4	PC	CAP FXD CER 390PF 10P 100VDC	P						
	056	01	51001120	8		62	PC	CAP CER F-Z .01UF +80-20P 25V	P						
	057	01	51786437	7		8	PC	CAP SOLID TANT 33UF 20P 15V	P						
	058	01	24504312	0		1	PC	CAP FXD TANT 6.8UF 20P 6WVDC	P						
	060	01	94227216	2		1	PC	CAP DIP MICA 39PF 1PF 300VDCW	P						
	066	01	24500055	9		1	PC	RES FXD COMP 470 OHM 5P 1/4W	P						
	067	01	24500087	2		1	PC	RES FXD COMP 10K OHM 5P 1/4W	P						
	068	01	24500039	3		2	PC	RES FXD COMP 100 OHM 5P 1/4W	P						
	069	01	24500063	3		12	PC	RES FXD COMP 1000 OHM 5P 1/4W	P						
	070	01	24500079	9		2	PC	RES FXD COMP 4700 OHM 5P 1/4W	P						
	071	01	24500027	8		1	PC	RES FXD COMP 33 OHM 5P 1/4W	P						
	072	01	24500036	9		1	PC	RES FXD COMP 75 OHM 5P 1/4W	P						
	073	01	24500048	4		2	PC	RES FXD COMP 240 OHM 5P 1/4W	P						
	074	01	24500081	5		1	PC	RES FXD COMP 5600 OHM 5P 1/4W	P						

BUILD ARC 210

ASSEMBLY PARTS LIST

PRINT DATE	PAGE	FILE CHANGE NO.
02-06-79	4	00013218

DIV.	ASSEMBLY NUMBER	CD	REV.	DWG.	DESCRIPTION	MC	STATUS	STATUS DATE	ENG. RESP.	FILE DATE
0860	90445967	4	B	D	CD ASSY BCAD LOG MOD	A	REL	10-12-78	CC555-L	11-09-78

T	FIND NO	LI	PART NUMBER	CD	M	QUANTITY	U/M	PART DESCRIPTION	MC	YLD	ECO. NO. IN	ECO. NO. OUT	S/N	WK IN	WK OUT
	075	01	24500073	2		2	PC	RES FXD COMP 2700 OHM 5P 1/4W	P						
	076	01	17705903	7		1	PC	RES FXD COMP 43K OHM 5P 1/4W	P						
	077	01	24500098	9		1	PC	RES FXD COMP 30K OHM 5P 1/4W	P						
	078	01	24500084	9		1	PC	RES FXD COMP 7500 OHM 5P 1/4W	P						
	080	01	62012906	4		2	PC	RES MOD DUAL 1K OHMS 125MW	P						
	081	01	62012920	5		2	PC	RES MOD DUAL 4.7K OHM 125MW	P						
	082	01	24500056	7		1	PC	RES FXD COMP 510 OHM 5P 1/4W	P						
	083	01	24500077	3		1	PC	RES FXD COMP 3900 OHM 5P 1/4W	P						
	084	01	17705908	6		1	PC	RES FXD COMP 68K OHM 5P 1/4W	P						
	085	01	24500071	6		1	PC	RES FXD COMP 2200 OHM 5P 1/4W	P						
	086	01	24500047	6		1	PC	RES FXD COMP 220 OHM 5P 1/4W	P						
	087	01	24500074	0		1	PC	RES FXD COMP 3000 OHM 5P 1/4W	P						
	088	01	94360292	0		2	PC	RES FXD FM 909 OHM 1P 1/4W	P						
	089	01	51007385	1		3	PC	DIO IN4148 10MA MICRO SIL 30V	P						
	090	01	15151500	4		1	PC	IC UA7800+5 357A POS V RGLTR	P						
	091	01	51862504	1		3	PC	SW, PC BD TGL 8 IN-LINE SPST	P						
	094	01	51904105	7		1	PC	OSC, TTL DIP 6.745MHZ 500MW	P						
	096	01	51848404	3		1	PC	SOCKET, IC 24 POS DL-IN-LINE	P						
	097	01	71486102	8		8	PC	BUS, PWR 1.35LG W/POSTS CU	P						
	098	01	71486101	0		4	PC	BUS, PWR 3.6LG W/POSTS CU	P						
	099	01	51906111	3		1	PC	CONN, 9 PIN PC MTD GOLD FIG 3	P						

BUILD ARC 210

ASSEMBLY PARTS LIST

PRINT DATE	PAGE	FILE CHANGE NO.
02-06-79	5	00013218

DIV.	ASSEMBLY NUMBER	CD	REV.	DWG.	DESCRIPTION	MC	STATUS	STATUS DATE	ENG. RESP.	FILE DATE
0860	90445967	4	B	D	CD ASSY 8CAD LOG MOD	A	REL	10-12-78	CC555-L	11-09-78

T	FIND NO	LI	PART NUMBER	CD	M	QUANTITY	U/M	PART DESCRIPTION	MC	YLD	ECO. NO. IN	ECO. NO. OUT	S/N	WK IN	WK OUT
	101	01	95642805	6		500	FT	WIR SLD 24GA TINNED	W						
	102	01	10125801	0		1	PC	WSHR, SPG LOCK NO.4 STL C/ZP	B						
	103	01	10125103	1		1	PC	NUT, HEX MSCR 4-40 STL CP/ZP	B						
	104	01	92780084	7		1	PC	SCR PAN HD SLT 4-40X5/16	B						
	105	01	16006500	9		REF	PC	FABRICATION SPECIFICATION	D						
	106	01	10121508	5		REF	PC	MARKING METHODS (SILK-SC,ETC)	D						
	107	01	16019500	4		REF	PC	REQ/INSTALLATION OF EXT CKTS	D						
	108	01	90445966	6		REF	PC	SCH DIAG 8CAD MULTI-USE	D						
	109	01	24500075	7		5	PC	RES FXD COMP 3300 OHM 5P 1/4W	P						
	110	01	94375102	4		3	PC	RES 8PIN SIP 3.3K OHM 3P 1/8W	P						
	111	01	24500061	7		1	PC	RES FXD COMP 820 OHM 5P 1/4W	P						
	112	01	24500059	1		1	PC	RES FXD COMP 680 OHM 5P 1/4W	P						
	113	01	51892316	4		1	PC	IC 1024BIT 256X4 BP-ROM ASSY	V						
	114	01	94375109	9		1	PC	RES 8PIN SIP 1K OHM 3P 1/8W	P						
	115	01	52629949	9		1	500	FT WIR WW 30GA SLD WHT UL KYNAR	W			13218			7846
	115	02	52629949	9		2	500	FT WIR WW 30GA SLD WHT UL KYNAR	W		13218			7846	
								0100 TOTAL LINES							

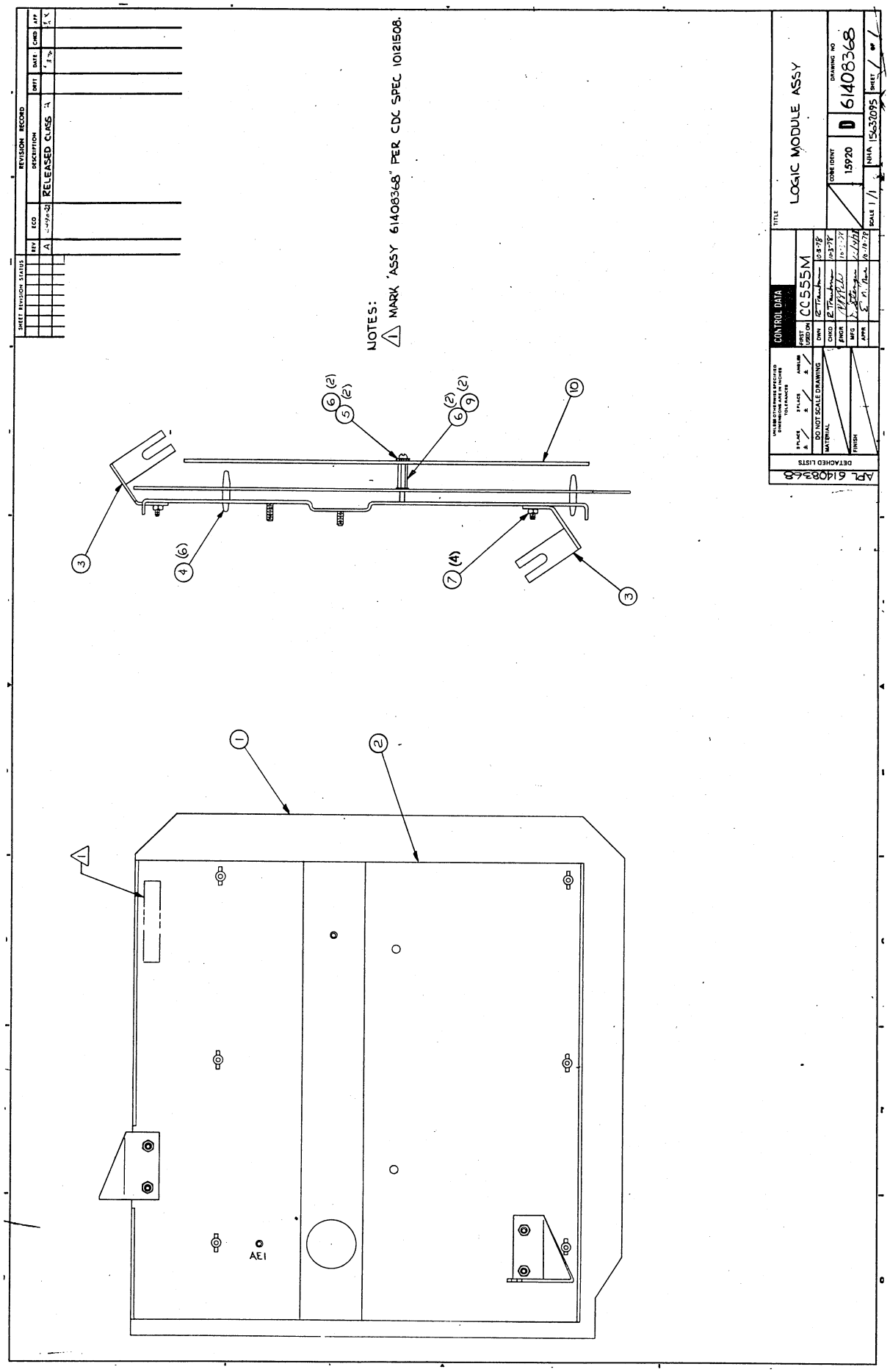

NOTES:
1 MARK "ASSY 61408368" PER CDC SPEC 10121508.
REVISION RECORD
SHEET REVISION STATUS
REV
ECO
DESCRIPTION
DRFT
DATE
CHKD
APP
A
RELEASED CLASS A
CONTROL DATA
CC555M
DO NOT SCALE DRAWING
MATERIAL
FINISH
DETACHED LISTS
APL 61408368
TITLE
LOGIC MODULE ASSY
CODE IDENT
15920
D
61408368
DRAWING NO
SCALE 1/1
NHA 15632095
SHEET 1 OF 1
AE1

BUILD ARC 230

ASSEMBLY PARTS LIST

PRINT DATE	PAGE	FILE CHANGE NO.
12-06-78	1	12490-22

DIV.	ASSEMBLY NUMBER	CD	REV.	DWG.	DESCRIPTION	MC	STATUS	STATUS DATE	ENG. RESP.	FILE DATE
0860	61408368	1	A	D	LOGIC MODULE ASSY	A	REL	10-12-78		12-06-78

T	FIND NO	LI	PART NUMBER	CD	M	QUANTITY	U/M	PART DESCRIPTION	MC	YLD	ECO. NO. IN	ECO. NO. OUT	S/N	WK IN	WK OUT
	001	01	90445969	0		1	PC	CD ASSY 8CBD LOG MOD	A						
	002	01	71485900	6		1	PC	MOUNTING PLATE	P						
	003	01	71488500	1		2	PC	BRACKET MTG PLATE	P						
	004	01	51777300	8		6	PC	SPRT, CKT BD 3/16 NYL FIG 1	P						
	005	01	10127104	7		2	PC	MSCR PAN PHL 4-40X 3/8	B						
	006	01	10126400	0		4	PC	WSHR NO.4 EXT TOOTH LK TYP A	B						
	007	01	10122901	1		4	PC	NUT TWIN SELF LOCKING 6-32	B						
	009	01	51875304	1		2	PC	STDOFF, M-F HEX BRS 4-40X5/8	B						
	010	01	71491829	9		1	PC	SHIELD(PWB ASSY)	P						
								0009 TOTAL LINES							

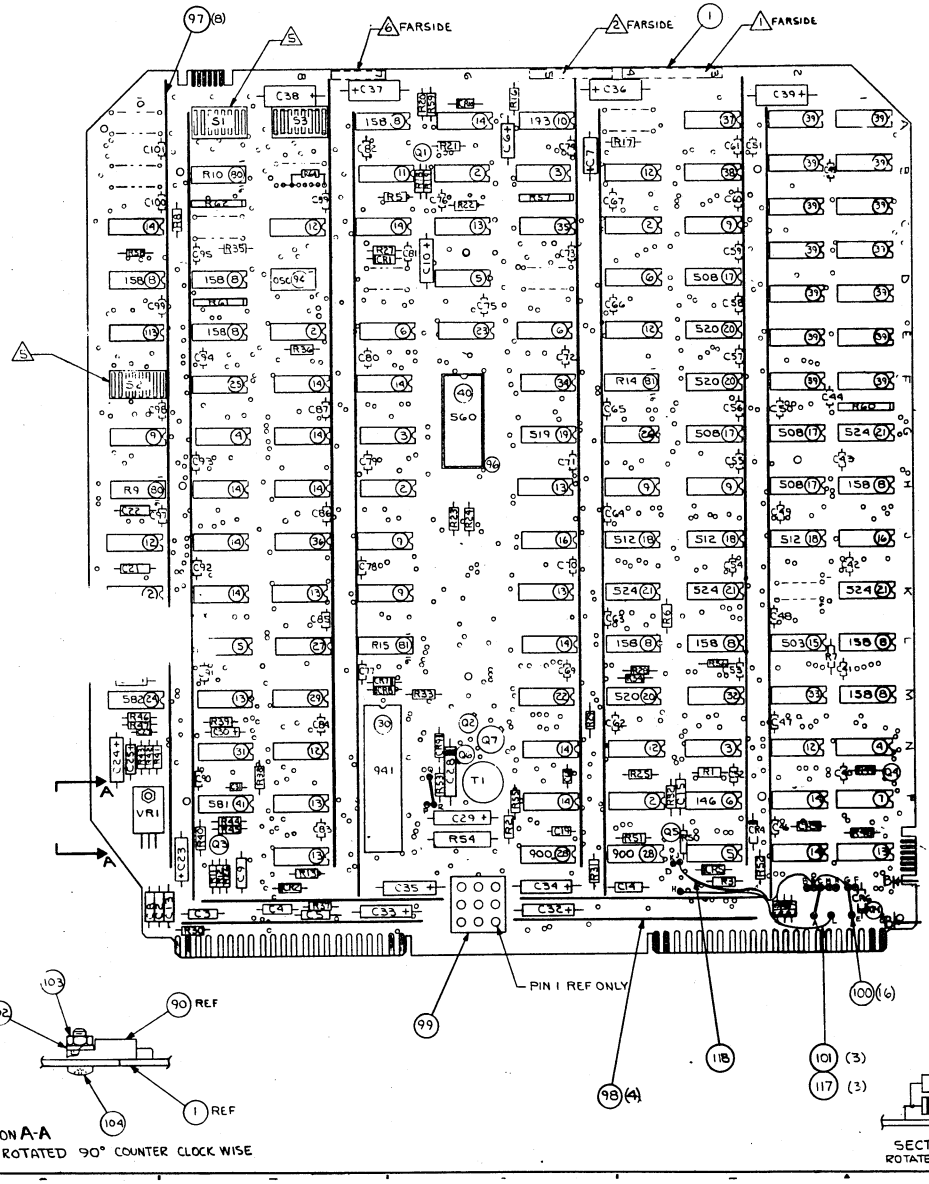

CROSS REFERENCE TABLE	
FIND NO.	REFERENCE DESIGNATION
42	Q7
43	Q2
44	Q6
45	Q1,Q4,Q5
46	Q3
47	C29
48	C28
49	C2,C3,C4,C5,C8,C14,C15 C21,C22
50	C24
51	C9,C13
52	C1,C6,C7,C23
53	C25
54	C10
55	C16,C17,C18,C19
56 ⚠5	C31,C40,C41,C42,C43 C44,C45,C46,C47,C48,C49 THRU87,89 THRU101
57	C32,C33,C34,C35,C36,C37,C38,C39
58	C30
60	C27
61	R54
62	R48,R49,R51,R55
63	R2,R3
64	R53
65	R33
66	R21,R52
67	R27,R50
68	R26,R30
69	R5,R6,R7,R8,R11,R12,R13,R25 R35,R36,R41,R45
70	R1,R37
71	R20
72	R18
73	R19,R22
74	R17
75	R31,R32
76	R23
77	R24
78	R16
	R4 NOT USED
80	R9,R10
81	R14,R15
82	R38
83	R39
84	R40
85	R42
86	R43,R63
87	R44
88	R46,R47
89	CR1,CR2,CR3,CR4,CR5 CR6,CR7,CR8,CR9,CR10
90	VR1
91	S1,S2,S3
92	T1
93	AT-1
109	R28,R29,R34,R56,R64
110	R57,R60,R61
111	R59
112	R58
114	R62

| SHEET REVISION STATUS | | |

BUILD ARC 210

ASSEMBLY PARTS LIST

PRINT DATE	PAGE	FILE CHANGE NO.
01-03-79	1	00013287

DIV.	ASSEMBLY NUMBER	CD	REV.	DWG.	DESCRIPTION	MC	STATUS	STATUS DATE	ENG. RESP.	FILE DATE
0860	90445969	0	D	D	CD ASSY 8CBD LOG MOD	A	REL	10-12-78		01-03-79

T	FIND NO	LI	PART NUMBER	CD	M	QUANTITY	U/M	PART DESCRIPTION	MC	YLD	ECO. NO. IN	ECO. NO. OUT	S/N	WK IN	WK OUT
	001	01	90460763	7		1	PC	PW BD MULTI USE	P						
	002	01	66299099	3		6	PC	IC 7400 TTL QUAD 2-IN NAND	P						
	003	01	66299100	9		3	PC	IC TTL 3 I/P NAND PLASTIC	P						
	004	01	66299102	5		2	PC	IC TTL DUAL 4-IN NAND	P						
	005	01	66299103	3		3	PC	IC TTL QUAD 2-IN NOR	P						
	006	01	39389700	4		4	PC	IC 7404 TTL QUAD 2 1/P	P						
	007	01	88885700	0		1	PC	IC TYPE 7486TTL QUAD 2 I/P	P						
	008	01	51761500	1		9	PC	IC 74161/9316 158 TTL CNTR 6	P						
	009	01	88886400	6		6	PC	IC TYPE 74157 TTL QUAD 2I/P	P						
	010	01	50254300	2		1	PC	IC 74123 193 TTL 2 RETGR MVB	P						
	011	01	96744155	1		2	PC	IC 7406 DRVR HEX INV BUFFER	P						
	012	01	88897000	1		7	PC	IC TYPE 7408 TTL QUAD 2I/P	P						
	013	01	96744172	6		8	PC	IC 7432 218 TTL QUAD 2IN OR	P						
	014	01	88885400	7		15	PC	IC TYPE 9024 TTL DUAL FLIP FO	P						
	015	01	95814600	3		1	PC	IC 74160/9310 503 TTL UP DEC	P						
	016	01	66299110	8		2	PC	IC TTL 1 OF 10 DECODER	P						
	017	01	66299111	6		4	PC	IC TTL DUAL 4 TO 1 MUX	P						
	018	01	52342700	3		3	PC	IC 74191/9336 512 TTL 4B BIN	P						
	019	01	88882800	1		1	PC	IC 74174 519 TTL 6BIT D LATCH	P						
	020	01	15104500	2		3	PC	IC 74175 520 TTL 4 BIT D LTCH	P						
	021	01	15108600	6		4	PC	IC 7485 524 TTL 4B MGNTD CPTR	P						

BUILD ARC 210

ASSEMBLY PARTS LIST

PRINT DATE	PAGE	FILE CHANGE NO.
01-03-79	2	00013287

DIV.	ASSEMBLY NUMBER	CD	REV.	DWG.	DESCRIPTION	MC	STATUS	STATUS DATE	ENG. RESP.	FILE DATE
0860	90445969	0	D	D	CD ASSY 8CBD LOG MOD	A	REL	10-12-78		01-03-79

T	FIND NO	LI	PART NUMBER	CD	M	QUANTITY	U/M	PART DESCRIPTION	MC	YLD	ECO. NO. IN	ECO. NO. OUT	S/N	WK IN	WK OUT
	022	01	88923600	6		1	PC	IC TYPE 74164 TTL 8BIT	P						
	023	01	88923700	4		1	PC	IC TYPE 74165 TTL 8BIT	P						
	024	01	15105700	7		1	PC	IC 4024 582 TTL DL/V CONT MVB	P						
	025	01	51861706	3		1	PC	IC 256BIT 32X8 BP-ROM ASSY	G						
	026	01	51861711	3		1	PC	IC 256BIT 32X8 BP-ROM ASSY	V						
	027	01	51861709	7		1	PC	IC 256BIT 32X8 BP-ROM ASSY	V						
	028	01	36186400	2		2	PC	IC MC1488 900 DTL QD LN DRVR	P						
	029	01	36186500	9		1	PC	IC MC1489 901 DTL QD LN RCVR	P						
	030	01	15125700	3		1	PC	IC TR1602A 941 MOS ASYN XCVR	P						
	031	01	88896100	0		1	PC	IC 7414 RCVR TTL HEX NAND	P						
	032	01	51892308	1		1	PC	IC 1024BIT 256X4 BP-ROM ASSY	V						
	033	01	51892309	9		1	PC	IC 1024BIT 256X4 BP-ROM ASSY	V						
	034	01	51892310	7		1	PC	IC 1024BIT 256X4 BP-ROM ASSY	V						
	035	01	51892311	5		1	PC	IC 1024BIT 256X4 BP-ROM ASSY	V						
	036	01	51892315	6		1	PC	IC 1024BIT 256X4 BP-ROM ASSY	V						
	037	01	51892313	1		1	PC	IC 1024BIT 256X4 BP-ROM ASSY	V						
	038	01	51892314	9		1	PC	IC 1024BIT 256X4 BP-ROM ASSY	V						
	039	01	15140300	3		14	PC	IC 2102A-4 772A MOS 1024B RAM	P						
	040	01	15144500	4		1	PC	IC SCM3750L 560 MOS 8192B ROM	P						
	041	01	15105600	9		1	PC	IC 4044 581 TTL PH/FREQ DETR	P						
	042	01	51681100	7		1	PC	XSTR 2N5189 NPN SIL	P						

BUILD ARC 210

ASSEMBLY PARTS LIST

PRINT DATE 01-03-79 | PAGE 3 | FILE CHANGE NO. 00013287

DIV.	ASSEMBLY NUMBER	CD	REV.	DWG.	DESCRIPTION	MC	STATUS	STATUS DATE	ENG. RESP.	FILE DATE
0860	90445969	0	D	D	CD ASSY 8CBD LOG MOD	A	REL	10-12-78		01-03-79

T	FIND NO	LI	PART NUMBER	CD	M	QUANTITY	U/M	PART DESCRIPTION	MC	YLD	ECO. NO. IN	ECO. NO. OUT	S/N	WK IN	WK OUT
	043	01	51003092	7		1	PC	XSTR 2N2222 HI SPEED NPN SIL	P						
	044	01	51714000	0		1	PC	XSTR 2N2907 PNP SIL	P						
	045	01	51003059	6		3	PC	XSTR DD1 106 EPITAX NPN SIL	P						
	046	01	51887100	9		1	PC	XSTR TO-18 LOW LVL NPN SIL	P						
	047	01	24504373	2		1	PC	CAP FXD TANT 47UF 20P 15VDCW	P						
	048	01	24506809	3		1	PC	CAP FXD MYL .022UF 10P 100V	P						
	049	01	51839147	9		9	PC	CAP FXD CER .100UF 10P 100VDC	P						
	050	01	24504369	0		1	PC	CAP FXD TANT 10UF 20P 15VDCW	P						
	051	01	51839142	0		2	PC	CAP FXD CER .033UF 10P 100VDC	P						
	052	01	51879105	8		4	PC	CAP FXD TANT 100UF 10P 6VDCW	P						
	053	01	24504317	9		1	PC	CAP FXD TANT .1UF 20P 35VDCW	P						
	054	01	24504322	9		1	PC	CAP FXD TANT 47UF 20P 6VDCW	P						
	055	01	51839119	8		4	PC	CAP FXD CER 390PF 10P 100VDC	P						
	056	01	51001120	8		62	PC	CAP CER .01UF 25VDCW	P						
	057	01	51786437	7		8	PC	CAP SOLID TANT 33UF 20P 15V	P						
	058	01	24504312	0		1	PC	CAP FXD TANT 6.8UF 20P 6WVDC	P						
	060	01	94227216	2		1	PC	CAP DIP MICA 39PF 1PF 300VDCW	P						
	061	01	24504817	8		1	PC	RES FXD COMP 12 OHM 5P 2WATT	P						
	062	01	24500065	8		4	PC	RES FXD COMP 1200 OHM 5P 1/4W	P						
	063	01	24500051	8		2	PC	RES FXD COMP 330 OHM 5P 1/4W	P						
	064	01	24500043	5		1	PC	RES FXD COMP 150 OHM 5P 1/4W	P						

BUILD ARC 210

ASSEMBLY PARTS LIST

PRINT DATE 01-03-79 | PAGE 4 | FILE CHANGE NO. 00013287

DIV.	ASSEMBLY NUMBER	CD	REV.	DWG.	DESCRIPTION	MC	STATUS	STATUS DATE	ENG. RESP.	FILE DATE
0860	90445969	0	D	D	CD ASSY 8CBD LOG MOD	A	REL	10-12-78		01-03-79

T	FIND NO	LI	PART NUMBER	CD	M	QUANTITY	U/M	PART DESCRIPTION	MC	YLD	ECO. NO. IN	ECO. NO. OUT	S/N	WK IN	WK OUT
	065	01	17705914	4		1	PC	RES FXD COMP 120K OHM 5P 1/4W	P						
	066	01	24500055	9		2	PC	RES FXD COMP 470 OHM 5P 1/4W	P						
	067	01	24500087	2		2	PC	RES FXD COMP 10K OHM 5P 1/4W	P						
	068	01	24500039	3		2	PC	RES FXD COMP 100 OHM 5P 1/4W	P						
	069	01	24500063	3		12	PC	RES FXD COMP 1000 OHM 5P 1/4W	P						
	070	01	24500079	9		2	PC	RES FXD COMP 4700 OHM 5P 1/4W	P						
	071	01	24500027	8		1	PC	RES FXD COMP 33 OHM 5P 1/4W	P						
	072	01	24500036	9		1	PC	RES FXD COMP 75 OHM 5P 1/4W	P						
	073	01	24500048	4		2	PC	RES FXD COMP 240 OHM 5P 1/4W	P						
	074	01	24500081	5		1	PC	RES FXD COMP 5600 OHM 5P 1/4W	P						
	075	01	24500073	2		2	PC	RES FXD COMP 2700 OHM 5P 1/4W	P						
	076	01	17705903	7		1	PC	RES FXD COMP 43K OHM 5P 1/4W	P						
	077	01	24500098	9		1	PC	RES FXD COMP 30K OHM 5P 1/4W	P						
	078	01	24500084	9		1	PC	RES FXD COMP 7500 OHM 5P 1/4W	P						
	080	01	62012906	4		2	PC	RES MOD DUAL 1K OHMS 125MW	P						
	081	01	62012920	5		2	PC	RES MOD DUAL 4.7K OHM 125MW	P						
	082	01	24500056	7		1	PC	RES FXD COMP 510 OHM 5P 1/4W	P						
	083	01	24500077	3		1	PC	RES FXD COMP 3900 OHM 5P 1/4W	P						
	084	01	17705908	6		1	PC	RES FXD COMP 68K OHM 5P 1/4W	P						
	085	01	24500071	6		1	PC	RES FXD COMP 2200 OHM 5P 1/4W	P						
	086	01	24500047	6		2	PC	RES FXD COMP 220 OHM 5P 1/4W	P						

BUILD ARC 210

ASSEMBLY PARTS LIST

PRINT DATE	PAGE	FILE CHANGE NO.
01-03-79	5	00013287

DIV.	ASSEMBLY NUMBER	CD	REV.	DWG.	DESCRIPTION	MC	STATUS	STATUS DATE	ENG. RESP.	FILE DATE
0860	90445969	0	D	D	CD ASSY 8CBD LOG MOD	A	REL	10-12-78		01-03-79

T	FIND NO	LI	PART NUMBER	CD	M	QUANTITY	U/M	PART DESCRIPTION	MC	YLD	ECO. NO. IN	ECO. NO. OUT	S/N	WK IN	WK OUT
	087	01	24500074	0		1	PC	RES FXD COMP 3000 OHM 5P 1/4W	P						
	088	01	94360292	0		2	PC	RES FXD FM 909 OHM 1P 1/4W	P						
	089	01	51001239	6		10	PC	REPLACED BY 51007385 12937	P			13269			7850
	089	02	51007385	1		10	PC	DIO MICRO SIL IN4148 30V 10MA	P		13269			7850	
	090	01	15151500	4		1	PC	IC UA7800+5 357A POS V REGLTR	P						
	091	01	51862504	1		3	PC	SW, PC BD TGL 8 IN-LINE SPST	P						
	092	01	30001000	6		1	PC	XFMR, PULSE COUPLING MEM DRVR	P						
	093	01	95791300	7		1	PC	IC 4N26 OPT COUPLED ISOLATOR	P			13287			7852
	093	02	51825700	1		1	PC	OPTICAL ISOLATOR	P		13287			7852	
	094	01	51904105	7		1	PC	OSC, TTL DIP 6.745MHZ 500HW	P						
	096	01	51848404	3		1	PC	SOCKET, IC 24 POS DL-IN-LINE	P						
	097	01	71486102	8		8	PC	BUS, PWR 11.35LG W/POSTS CU	P						
	098	01	71486101	0		4	PC	BUS, PWR 3.6LG W/POSTS CU	P						
	099	01	51906111	3		1	PC	CONN, 9 PIN PC MTD GOLD FIG 3	P						
	100	01	65832100	5		16	PC	SOCKET MINI SPRING	P						
	101	01	95642805	6		400	FT	WIR SLD 24GA TINNED	W						
	102	01	10125801	0		1	PC	WSHR, SPG LOCK NO.4 STL C/ZP	B						
	103	01	10125103	1		1	PC	NUT, HEX MSCR 4-40 STL CP/ZP	B						
	104	01	92780084	7		1	PC	SCR PAN HD SLT 4-40X5/16	B						
	105	01	16006500	9		REF	PC	FABRICATION SPECIFICATION	D						
	106	01	10121508	5		REF	PC	MARKING METHODS (SILK-SC,ETC)	D						
	107	01	16019500	4		REF	PC	REQ/INSTALLATION OF EXT CKTS	D						

BUILD ARC 210

ASSEMBLY PARTS LIST

PRINT DATE	PAGE	FILE CHANGE NO.
01-03-79	6	00013287

DIV.	ASSEMBLY NUMBER	CD	REV.	DWG.	DESCRIPTION	MC	STATUS	STATUS DATE	ENG. RESP.	FILE DATE
0860	90445969	0	D	D	CD ASSY 8CBD LOG MOD	A	REL	10-12-78		01-03-79

T	FIND NO	LI	PART NUMBER	CD	M	QUANTITY	U/M	PART DESCRIPTION	MC	YLD	ECO. NO. IN	ECO. NO. OUT	S/N	WK IN	WK OUT
	108	01	90445966	6		REF	PC	SCH DIAG 8CAD MULTI-USE	D						
	109	01	24500075	7		4	PC	RES FXD COMP 3300 OHM 5P 1/4W	P			13269			7850
	109	02	24500075	7		5	PC	RES FXD COMP 3300 OHM 5P 1/4W	P		13269			7850	
	110	01	94375102	4		3	PC	RES 8PIN SIP 3.3K OHM 3P 1/8W	P						
	111	01	24500061	7		1	PC	RES FXD COMP 820 OHM 5P 1/4W	P						
	112	01	24500059	1		1	PC	RES FXD COMP 680 OHM 5P 1/4W	P						
	113	01	51892316	4		1	PC	IC 1024BIT 256X4 BP-ROM ASSY	V						
	114	01	94375109	9		1	PC	RES 8PIN SIP 1K OHM 3P 1/8W	P						
	115	02	52629949	0		1	500 FT	WIR WW 30GA SLD WHT UL KYNAR	W			13218			7846
	115	03	52629949	0		2	500 FT	WIR WW 30GA SLD WHT UL KYNAR	W		13218			7846	
	117	01	24528619	0			400 FT	TBG, INSUL NO.22 CLEAR UL PVC	B						
	118	01	61408352	5		1	PC	JUMPER WIRE ASSY	G						
								0118 TOTAL LINES							

SHEET REVISION STATUS	REVISION RECORD						
	REV	ECO	DESCRIPTION	DRFT	DATE	CHKD	APP
	A	12990-22	RELEASED CLASS "A"	/	10/12/78	/	[illegible]

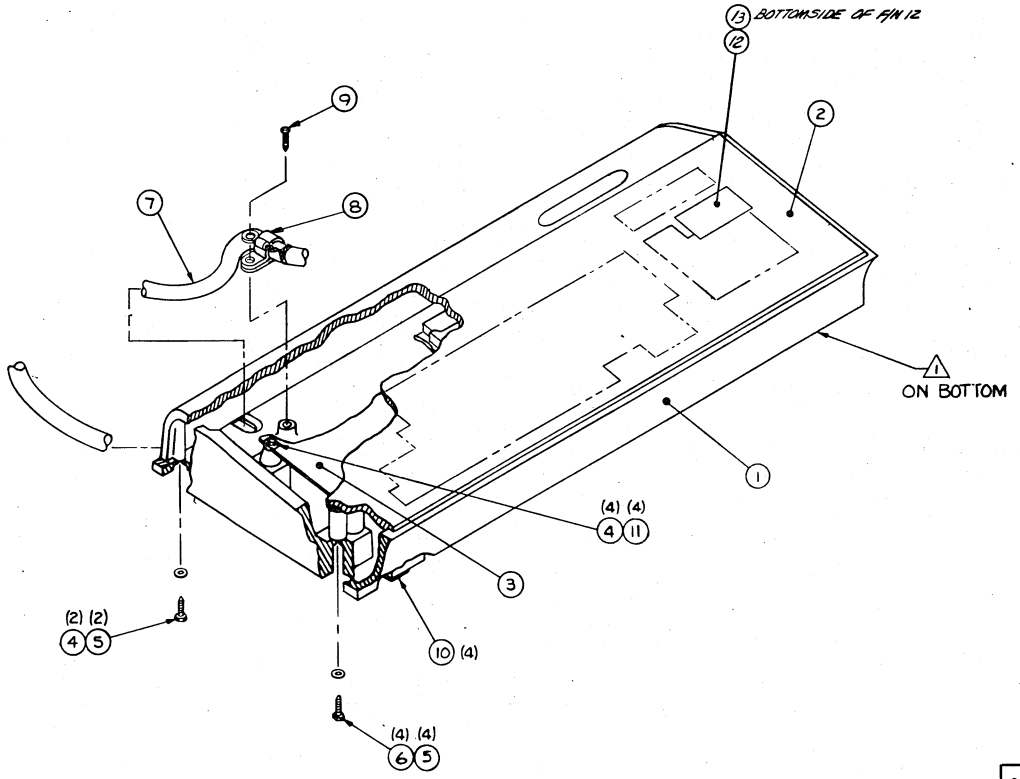

NOTES:
1. MARK "ASSY 15632096 PER CDC SPEC 10121508.

APL 15632096	DETACHED LISTS	UNLESS OTHERWISE SPECIFIED DIMENSIONS ARE IN INCHES TOLERANCES 3 PLACE ± 2 PLACE ± ANGLES ±	TITLE TYPEWRITER KEYBOARD S/1 83 KEY
		DO NOT SCALE DRAWING	CA 150E
		MATERIAL	DRAWN BY W J Glass 9-6-78
		FINISH	CHECKED BY [illegible] 9-14-78
			ENGINEER [illegible] 9/14/78
			MFG [illegible] 10/2/78
			APPROVED [illegible] 10-11-78
			CODE IDENT 15920
			DRAWING NO D 15632096
			SCALE EC 15632086 SHEET / OF /

BUILD ARC 230

ASSEMBLY PARTS LIST

PRINT DATE	PAGE	FILE CHANGE NO.
12-06-78	1	12490-22

DIV.	ASSEMBLY NUMBER	CD	REV.	DWG.	DESCRIPTION	MC	STATUS	STATUS DATE	ENG. RESP.	FILE DATE
0860	1563?096	2	A	D	KYBD, 83 KEY S/1 TWR (TA)	N	REL	10-12-78	CA15?E	12-06-78

T	FIND NO	LI	PART NUMBER	CD	M	QUANTITY	U/M	PART DESCRIPTION	MC	YLD	ECO. NO. IN	ECO. NO. OUT	S/N	WK IN	WK OUT
	001	01	71492720	9		1	PC	BASE-KYBD (SEAFOAM WHITE)	A						
	002	01	71492406	5		1	PC	COVER, 82KEY KYBD (PAINTED)	P						
	003	01	51917735	6		1	PC	KEYBOARD SELECTRIC	P						
	004	01	00860303	7		6	PC	MSCR SLF-LKG HEX 6-32X3/8	B						
	005	01	10125605	5		6	PC	WSHR, PLN NO.6 TYP A STL C/ZP	B						
	006	01	00860304	5		4	PC	MSCR SLF-LKG HEX 6-32X1/2	B						
	007	01	61407894	7		1	PC	CABLE ASSY KYBD EXT	A						
	008	01	51917070	8		1	PC	CLAMP, TUBE SIZE 6 (ALUM)	P						
	009	01	18607008	3		1	PC	SCR, TPG IND/HEX 8-18X1/2 STL	B						
	010	01	51805801	1		4	PC	BUMPER, RUBBER .30?H SLF-STKG	P						
	011	01	09040202	5		4	PC	WASHER LOCK DISHED TOOTH NO.6	B						
	012	01	71492181	4		1	PC	PLUG, SWITCH (PLASTIC/BLK)	P						
	013	01	71492421	4		1	PC	LABEL, SWITCH COVER (VINYL)	P						
								0013 TOTAL LINES							

COMMENT SHEET

MANUAL TITLE: 752 Keyboard Display Terminal Hardware Maintenance Manual (CC555-A through CC555-M)

PUBLICATION NO.: 62957400 **REVISION:** J

NAME: _____

COMPANY: _____

STREET ADDRESS: _____

CITY: _____ **STATE:** _____ **ZIP CODE:** _____

This form is not intended to be used as an order blank. Control Data Corporation welcomes your evaluation of this manual. Please indicate any errors, suggested additions or deletions, or general comments below (please include page number references).

CUT ALONG LINE

03376 REV. 4/79 PRINTED IN U.S.A.

NO POSTAGE STAMP NECESSARY IF MAILED IN U.S.A.

FOLD ON DOTTED LINES AND STAPLE

FOLD FOLD

NO POSTAGE
NECESSARY
IF MAILED
IN THE
UNITED STATES

BUSINESS REPLY MAIL

FIRST CLASS PERMIT NO. 8241 MINNEAPOLIS, MINN.

POSTAGE WILL BE PAID BY

CONTROL DATA CORPORATION

Technical Publications Department
2401 North Fairview Avenue
St. Paul, Minnesota 55113

CUT ALONG LINE

FOLD FOLD

03377